Inline Check Valve (CVI)

FEATURES

- Heavy duty brass body construction
- Female NPT inlet and outlet connections
- Horizontal or vertical installation
- Stainless steel spring
- Five-year warranty



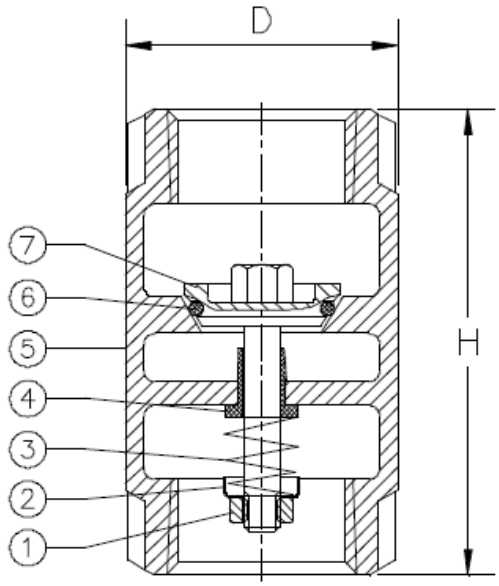

MATERIAL SPECIFICATION

No.	Parts	Materials
1	Stem Nut	Stainless Steel (304/306) Brass (ASTM-UNS B124 C37700)
2	Spring Holder	Stainless Steel (304/306)
3	Spring	Stainless Steel (304/306)
4	Stem House	Polyacetal (CF 500 P)
5	Body	Brass (ASTM-UNS B584 C85710)
6	O Ring	Rubber NBR (SAE NO 1052)
7	Stem	Brass (ASTM-UNS B584 C85710)

DIMENSIONS

Item No.	Size	D (mm)	H (mm)
CVI-050	1/2"	32	61
CVI-075	3/4"	38	69.5
CVI-100	1"	45	82
CVI-125	1 1/4"	54	92
CVI-150	1 1/2"	60	102.5
CVI-200	2"	77	128

PRESSURE RATINGS

Item No.	Flow Rate GPM	Pressure Test	Pressure Drop
CVI-050	13.6	25 PSI	5 PSI
CVI-075	25.1	25 PSI	5 PSI
CVI-100	42.4	25 PSI	5 PSI
CVI-125	74.7	25 PSI	5 PSI
CVI-150	83	25 PSI	5 PSI
CVI-200	110.3	25 PSI	10 PSI

9169 Pulsar Court
Corona, California 92883
P 951.808.0852 F 951.808.0906
www.aqualineinc.com