Carriage Trade

H-Series Large



FEATURES & BENEFITS

- customer preferred -- lighter, easier to push and un-nest
- plastic baskets reduce damage to store fixtures and autos while complementing store branding and decor
- cart width fits most aisles while maintaining maximum shopping capacity
- easy branding on up to 3 areas
- chassis is powder coated finish
- 5" non-marking wheels ensure that your store's floors stay clean
- optional ergonomic, ABS handle allows for a full color graphic logo while looking and feeling good to the customer

OPTIONS

- cart finish: powder coated
- standard frame colors: metallic grey
- standard basket colors: black, blue, green, red
- custom colors: PMS match with 250pc min. order
- custom branding: logo handles, view handle, logo panels

SPECIFICATIONS

length	39.72 inches
width	22.64 inches
height	42.24 inches
weight of cart	52 pounds
nesting distance	12.91 inches
basket capacity	9,057 inches^3
cart capacity	13,035 inches^3
shopping capacity	16,658 inches^3
item numbers	102-165
wheel description	5 inch
brakes	no

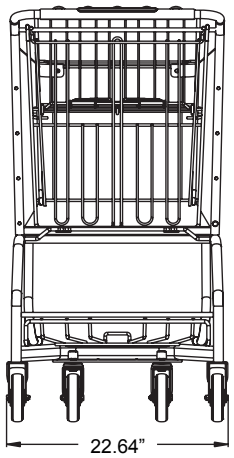

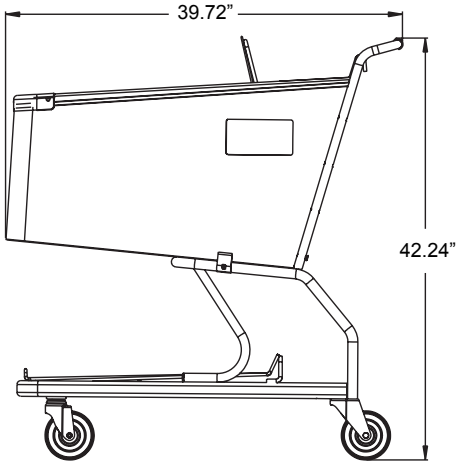

rev. 10.20.2015