CARRIAGE TRADE SERVICE CO



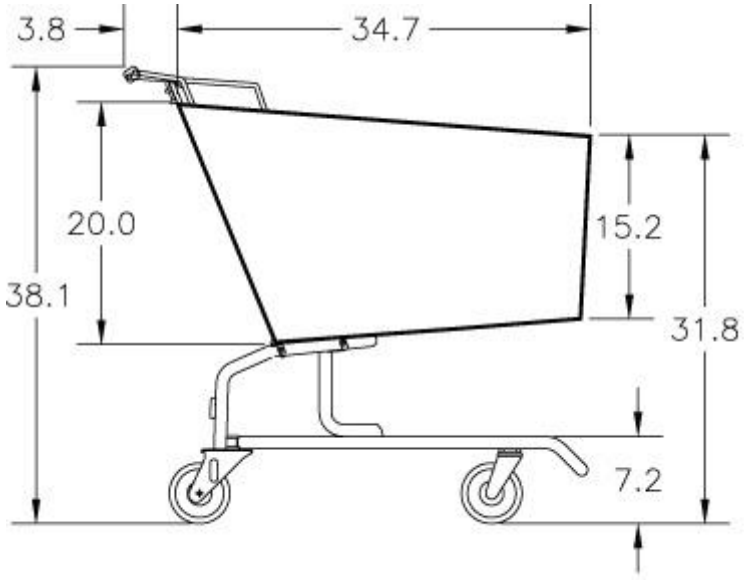

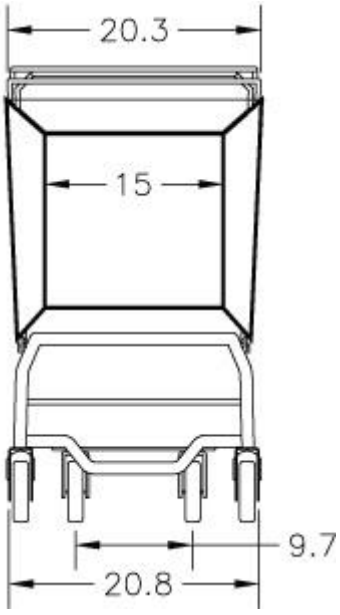

Basket Capacity: 8,600 cu.in.
Under Basket: 3,400 cu.in.
Total Capacity: 12,000 cu.in.
Weight: 56 lbs.
Cart Nesting: 10 1/2”

Carriage Trade Service Co., Inc 800-822-0422 x1001 dave@carriage-trade.com