PHOENIKS

ELECTRIC VITRO 2-ZONE COUNTER SL
MODEL NO: 1223401

Product Advantages:

- Housing made completely of stainless steel.
- U-shaped connection channel, flush with top plate; tightly fitted to the substructure, for maximum hygiene.
- Buckling resistant, self-supporting, closed construction.
- Hob zones with radiating heating elements 210 mm diameter, 2,3 kW each.
- Pan size recognition can be switched to manual control.
- Protection against overheating by automatic power resetting.
- Seamless glass ceramic hob 6 mm thick and area 305 x 540 mm.

Installation requirements:

- Electrical supply provided by customer.

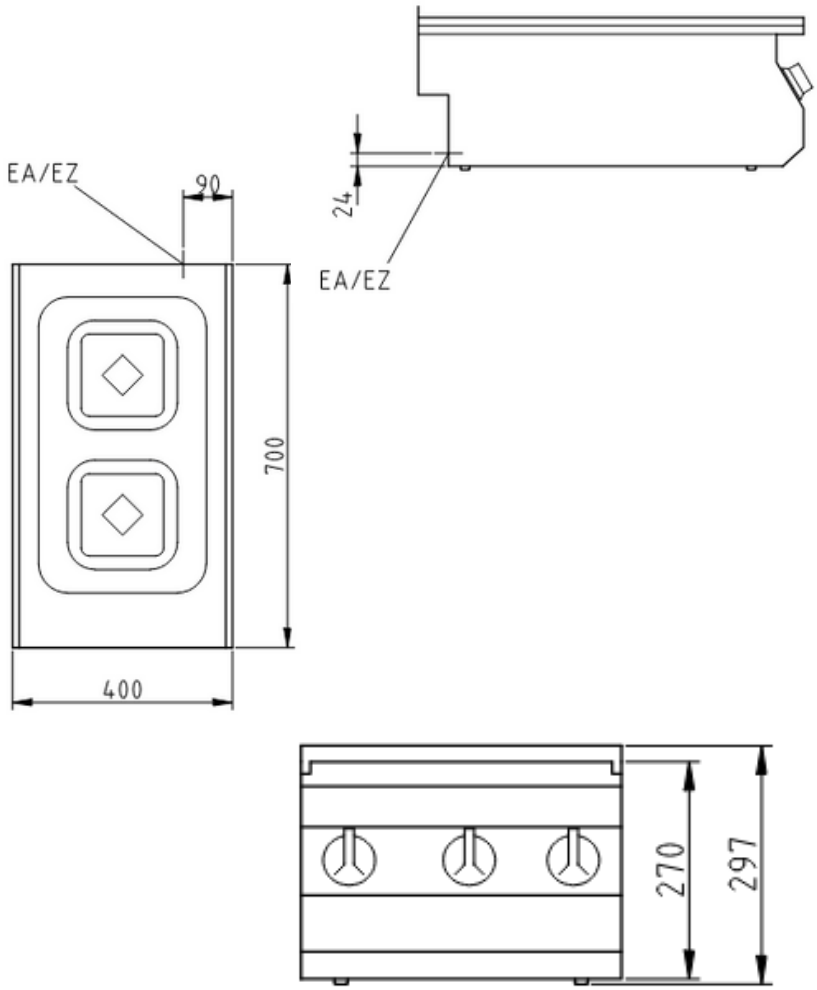



Technical Data:	
Width x Height x Depth (mm)	400 x 270 x 700 mm
Effective area	1
Dim.: effect. Area (mm)	305 x 540
Connected load (elect.) (kW):	4.6
Voltage (V) / EC:	415 3 phase AC
Frequency (Hz):	50
Recommended fuses (A):	3 x 20
Net weight (kg):	20
Gross weight (kg):	28
Heat emission latent (W):	368
Heat emission sensitive (W):	920
Type of protection:	IPX4