Rack pass-through dishwashers
PT Series

Top Performance – the efficiency of washing



Top Performance – a perfect finish for all dishes

Winterhalter has long set the standards for pass-through dishwashers with the GS 500 Series. Accordingly, the demands set by Winterhalter for its new generation were particularly high. The result is a series of machines that surpasses all of its successful predecessors and is nothing short of pioneering in its efficiency and ergonomics:

Simply brilliant
Unrivalled cleaning results

Superior speed
Minimal cleaning times with fast filling and heating

Guaranteed economy
Minimal consumption of resources and intelligent energy recycling

Whether glasses, crockery, pizza dishes, GN-2/1 trays or European standard crates – all foodservice companies have to wash a wide range of items.
To meet these demands, Winterhalter developed the new PT Series in three different machine sizes.

You can use the links and QR codes in this brochure to access animations, calculations and much more information on the PT Series.



Simply Brilliant





A commercial warewasher must deliver hygienic cleaning results and a perfect finish every time. With its innovative technology, the PT Series is designed to deal with even the most stubborn of soiling. All of the washing elements and processes are coordinated simultaneously, resulting in brilliant cleaning results, unmatched by any other machine to date.



Simply brilliant thanks to:

- Variable washing pressure – coordinated for dish type and degree of soiling
- Full coverage washing
- Wash water is clean at all times

Perfect results for the toughest demands



Interior of the machine (top view)



Interior of the tank (cross section)

Customised washing power

The washing pressure is a key factor in ensuring hygienically clean results. By selecting the corresponding programme, VarioPower automatically adjusts the washing power to the type of dishes and the degree of soiling. Anything with light soiling is washed at low pressure, while items with heavy soiling are cleaned at a higher pressure. VarioPower delivers a polished result with minimum wear to the dishes.

Adjustment of other washing elements

In addition to the VarioPower pressure adjustment, all other elements involved in the cleaning process are adjusted automatically, in particular temperatures, time, detergent and rinse aid. That means that perfect results are always guaranteed, even with stubborn soiling.

Complete coverage

The elliptical wash fields with integrated wash and rinse jets maximise coverage. The shape, size and angle of each individual jet is designed to guarantee brilliant cleaning results throughout the entire machine.

Wash water is clean at all times

In the new PT series, the wash water is constantly filtered and monitored during the whole washing process. Three pioneering components ensure that the water remains clean with unprecedented quality:

The patented full-flow filtration, consisting of a tank cover, filter cylinder and pump inlet filter, filters 100 % of the wash water. The proven Mediamat also removes fine impurities such as coffee grounds using centrifugal force.

A sensor continuously monitors the quality of the wash water. If necessary, more fresh water is fed into the tank which gradually regenerates the wash water. This means that the machine always provides brilliant cleaning and hygienic results.

HighTemp – washing at high temperatures

Special hygiene requirements are fulfilled using programme adjustments.

The animations in the PT-Scout (www.winterhalter.biz/pt-scout) offer a unique insight into the functions of full-flow filtration and VarioPower pressure regulation.

Superior Speed







Perfect cleaning results in no time – crucial for optimising kitchen logistics. Clean dishes must be used again immediately to minimise the dish stocks and storage space required. Efficient workflow organisation is essential at peak times in particular. That is why Winterhalter redefined the cleaning process: The PT Series is faster than standard warewashers, but still produces brilliant cleaning results. The innovative developments reduce both the heating and programme times significantly.



Superior speed thanks to:

- Needs-based provision of power
- Faster programme times
- Far shorter heating times

Increased speed for more throughput





Interior of the machine and plinth (cross section)

Shorter programme times

Winterhalter pass-through dishwashers are the first of their kind to feature energy management. That reduces the cleaning time and thus increases the rack capacity by up to 28 % per hour.

The flexible VarioPower water pressure adjustment, the full-coverage elliptical full jet wash fields and the patented full-flow filtration achieve a brilliant cleaning result, even with short programme times.

Short waiting times

Winterhalter is the first manufacturer to equip all its machines in the PT Series with the EnergyLight waste water heat exchanger. The cold water supply is continuously pre-heated, which means that it reaches the required rinse water temperature faster. The time taken to heat up the rinse water decreases noticeably by up to 26 %, making back-to-back rack washing possible at peak times.

Reduced heating times

The active energy management makes optimal use of the available energy to prepare the machine for operation rapidly. That reduces the heating time by up to 50 %. As a result, the PT Series machines are ready for operation far faster than other pass-through dishwashers.

Guaranteed Economy



Saving resources and energy plays a key role in warewashing solutions. When investing in a warewasher, considering the running costs should play a major factor in your decision, due to the rising costs of electricity and water. Lower operating costs can help amortise the purchase cost quickly. Back in 2007, Winterhalter was the first manufacturer to set new standards in energy recovery with the Energy models. The PT Series is now the second generation of machines to lead the way in energy efficiency.

Thanks to a variety of innovative technical solutions, the PT Series is a perfect example of Winterhalter's economy principle, which incorporates three aspects: efficient energy use, consistent energy recycling and the economical use of resources.





More performance at a lower cost

Efficient energy use

For the first time in the industry, all pass-through dishwashers in Winterhalter's PT Series (except PT-500) are equipped with heat recovery systems. The compact waste water heat exchanger Energy Light uses the heat from the waste water to heat the cold water supply. This makes these machines extremely economical and reduces energy costs by up to 10 %.

Consistent energy recycling

The PT Series machines can also optionally be equipped with the large waste water heat exchanger and an additional exhaust air heat exchanger. These EnergyPlus models then use the energy from the waste water and the exhaust air for the two-step heating of the cold water supply. The operating costs will be reduced by up to 20 % per wash cycle. As the exhaust air temperature is also reduced by more than half, investments in additional extraction hoods may also be unnecessary.*[1]

The EnergyPlus models are a worthwhile investment to save energy in the long term: The additional costs for the EnergyPlus option pay off rapidly. Calculate your personal amortisation via the link below.



Economical use of resources

With the new patented driven rinse system (optional), fresh water is no longer required to rotate the wash fields. This revolutionary drive reduces the standard rinse water volume significantly. That reduces the operating costs by approx. 12 % per wash cycle. This optimised rinse system ensures that cleaning results remain brilliant even though far less fresh water is used.

Maximum economy

The combination of EnergyPlus and the driven rinse system in a PT warewasher guarantees maximum economy in the long term. Compared with standard rack pass-through dishwashers, the operating costs are reduced by up to 32 %.

*[1] Please refer to guidelines for kitchen ventilation systems.

The innovative operating cost calculator make it easy for you to calculate the operating costs and CO_2 consumption of the various PT models.
You can find it, along with two interesting animations on the topics of "Driven rinse system" and "EnergyPlus" in the PT-Scout (www.winterhalter.biz/pt-scout).



Guaranteed economy thanks to:

- Maximum energy efficiency
- Consistent energy recycling
- Minimum consumption of resources
- Reduced energy costs

Incredibly Easy

Warewashers must be simple and self-explanatory to operate. Unskilled, frequently changing personnel must be able to get their bearings immediately. That is why the new Winterhalter pass-through dishwashers use symbols to maximise ease of operation.

The machines control many workflows automatically and can detect and report errors, and even rectify some errors themselves. That makes day-to-day work in kitchens significantly easier – it reduces the work-load of the personnel and virtually rules out operating errors.

Although careful thought has been given to the operation of the Series, there is also great focus on ergonomics and cryptoclimates.







Incredibly easy thanks to:

- Self-explanatory operation
- Perfectly harmonised washing programmes
- Better cryptoclimate in the kitchen
- Ergonomic design

Maximum convenience for greater safety





Interior of the machine with wash field (top view)

Extremely easy to use

The touchscreen is the basis for self-explanatory, language-neutral operation: Three standard programmes can be selected depending on the type dishes and degree of soiling. You simply tap the appropriate pictogram to start. All washing elements like water pressure, detergent quantity, temperatures and time are adjusted automatically.

Visual and audible signals allow operators to react quickly to machine messages, e.g. blocked wash fields or lack of detergent. The staff can intervene immediately and rectify the error directly. That guarantees hygienic cleaning results and reduced downtime.

The PIN-protected chef level gives access to the operating and hygiene logbook. Hygiene-related events like lack of detergent, cleaning behaviour and malfunctions are documented here.

Pleasant cryptoclimate

The EnergyPlus models reduce the exhaust air temperature and humidity, which leads to a better cryptoclimate in the long term.

Sophisticated ergonomics

The ergonomic machine design facilitates workflows in the kitchen. The unique, ergonomic hood handles and optional automatic hood opener (for PT-M / PT-L, not available for PT-XL) ensure effortless machine operation, even for long working days. The machine can be programmed to start up automatically in the morning and close down in the evening.

In addition, it reduces the workload of the kitchen staff, with innovative special programs and the hygienic design of the interior of the machine.

Test how easy it is to operate the varied functions with the interactive touchscreen in the PT-Scout (www.winterhalter.biz/pt-scout).

PT Series	PT-M	PT-L	PT-XL
Cleaning result / speed			
Elliptical wash fields with special jet geometry	●	●	●
VarioPower washing pressure adjustment	●	●	●
Full-flow filtration: tank cover, filter cylinder, pump inlet filter with safety prompt, Mediamat	●	●	●
Clouding sensor	●	●	●
Integrated detergent dosing device	○	○	○
Integrated rinse aid dosing device	●	●	●
Integrated softener	○	○	○
Active energy management	●	●	●
Efficiency			
EnergyLight heat recovery	●	●	●
EnergyPlus heat recovery	○	○	○
Driven rinse system (magnetic drive)	○	○	○
ECO special programme	●	●	●
User-friendliness and ergonomics			
Touchscreen	●	●	●
Colour-coded single-button control with progress display	●	●	●
Glass, dishes, bistro, cutlery software	●	●	●
Short and intensive programmes	●	●	●
Basic cleaning programme for dishes	●	●	●
Special Silent Programme	●	●	●
Guided self-cleaning programme	●	●	●
Machine descaling programme	●	●	●
Time-controlled automatic start-up	●	●	●
Time-controlled automatic shut-down	●	●	●
Audible event signaling	●	●	●
Separate container empty indicator for detergent / rinse aid	●	●	●
Wash fields blocked error message	●	●	●
Lack of salt error message (with integrated softener)	○	○	○
Maintenance interval indicator	●	●	●
PIN-protected chef level	●	●	●
PIN-protected service technician level	●	●	●
Integrated hygiene and operating logbook	●	●	●
Animated operating instructions and washing tips	●	●	●
Contact data for service technician and chemical suppliers stored	●	●	●
Double-skinned hood with lock position	●	●	●
Automatic hood opening	○	○	–
Automatic hood start	●	●	●
Deep-drawn hygienic tank	●	●	●
Hygiene tank heater	●	●	●
Hygienic rack guide	●	●	●
Miscellaneous			
TwinSet (combination of 2 PT machines)	○	○	–
Cool version (cold water rinse)	○	○	○
HighTemp version	○	○	○
Third dosing device	○	○	○
Soft start for washing pump	●	●	●
Thermostop for hygienic safety	●	●	●
Drain pump	●	●	●
Rinse booster pump	●	●	●
Leak sensor	●	●	●
Multiphasing	●	●	●
Transfer strip for external dosing units	●	●	●
Multifunctional output as an interface to external devices	●	●	●
Interface for connecting to energy management systems pursuant to DIN 18875	○	○	○

● Standard ○ Option – Not available

Inlet water temperature max. 50 °C for glasswashers / max. 60 °C for dishwashers.

Design examples for PT Series

PT-M corner installation pass-through direction right-front



PT-L pass-through direction left-right

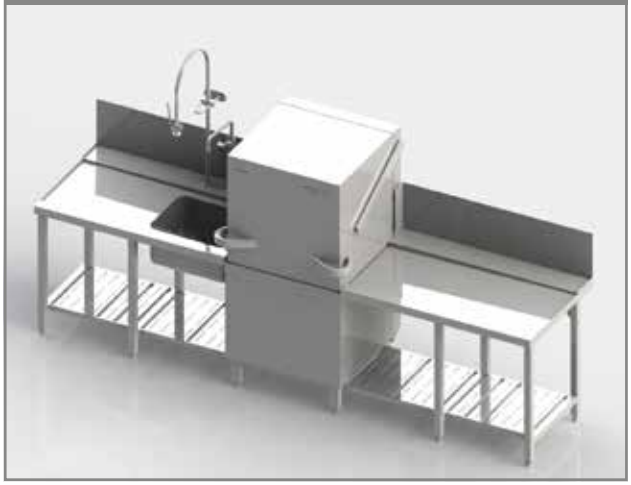

PT-L EnergyPlus pass-through direction right-left

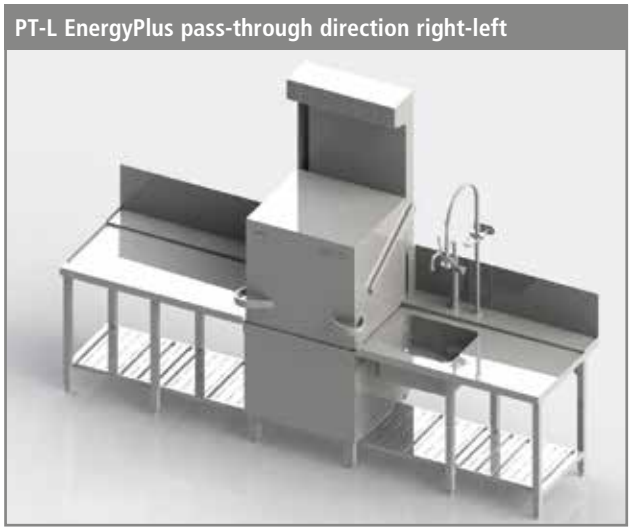

PT-XL corner installation pass-through direction front-right

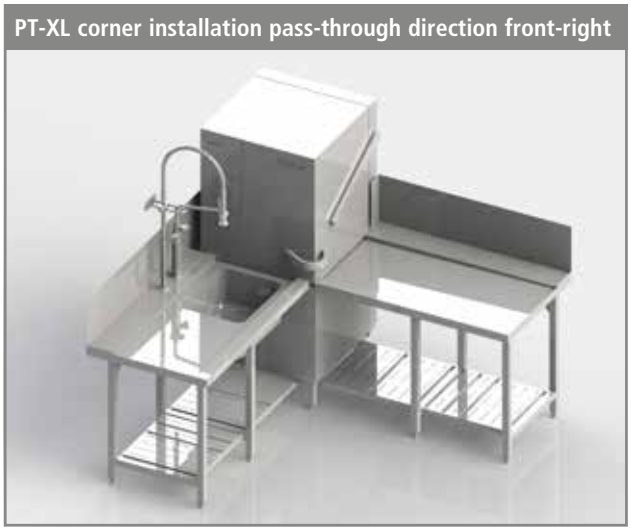

PT-M TwinSet pass-through direction right-left

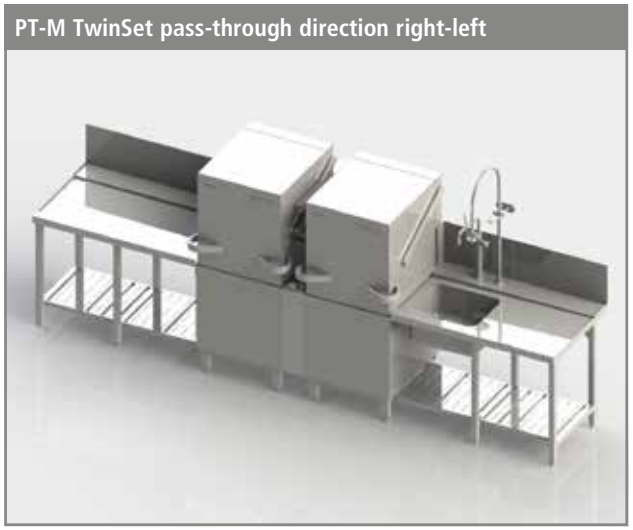

PT-M TwinSet corner installation pass-through direction right-front

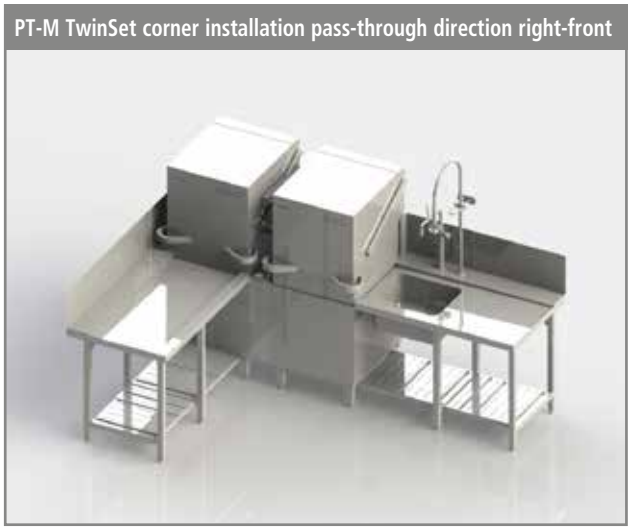

Without EnergyPlus

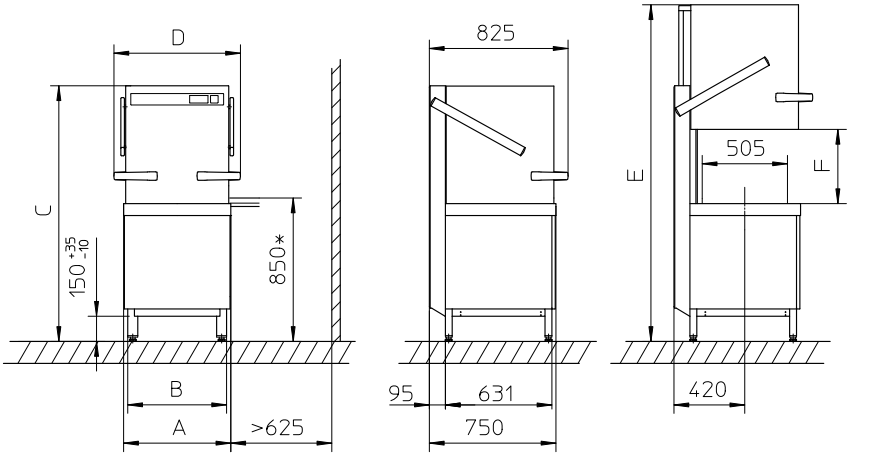

With EnergyPlus

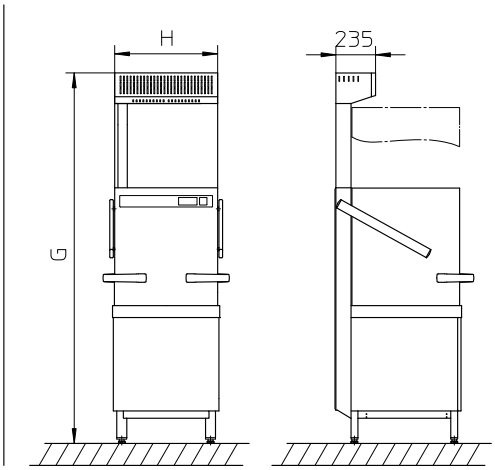

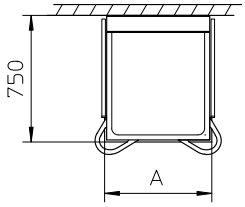

	PT-M	PT-L	PT-XL
A	635	735	735
B	585	685	685
C	1515	1515	1635
D	750	850	850
E	1995	1995	2235
F	440	440	560
G	2195	2195	2435
H	610	710	710

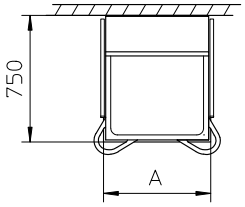

PT TwinSet dimensions and installation variants

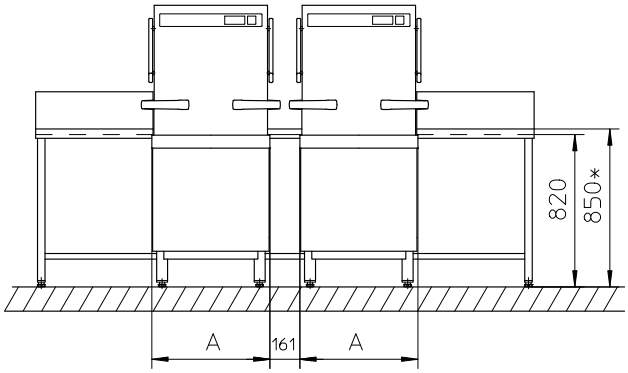

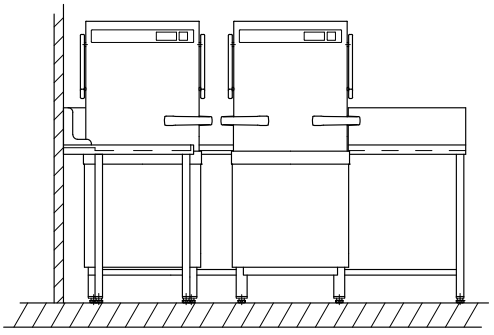

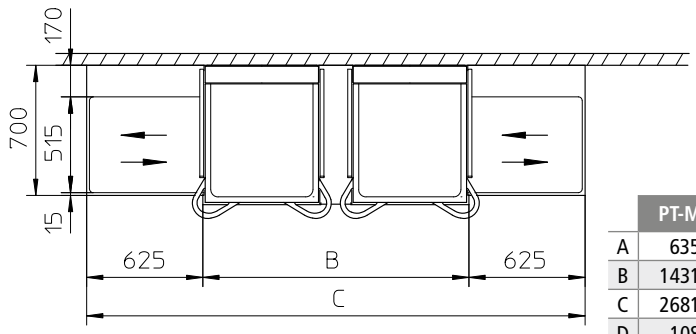

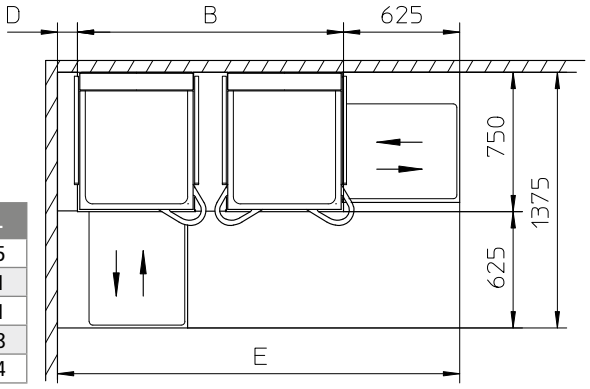

	PT-M	PT-L
A	635	735
B	1431	1631
C	2681	2881
D	108	58
E	2164	2314

* 900 mm working height also available instead of 850 mm. That increases the vertical dimensions by 50 mm. For installation variants, see page 23.

Table depth: 700 mm / table length: 625 mm and 1,200 mm

900 mm working height also available instead of 850 mm. Table depth 800 mm available on request.

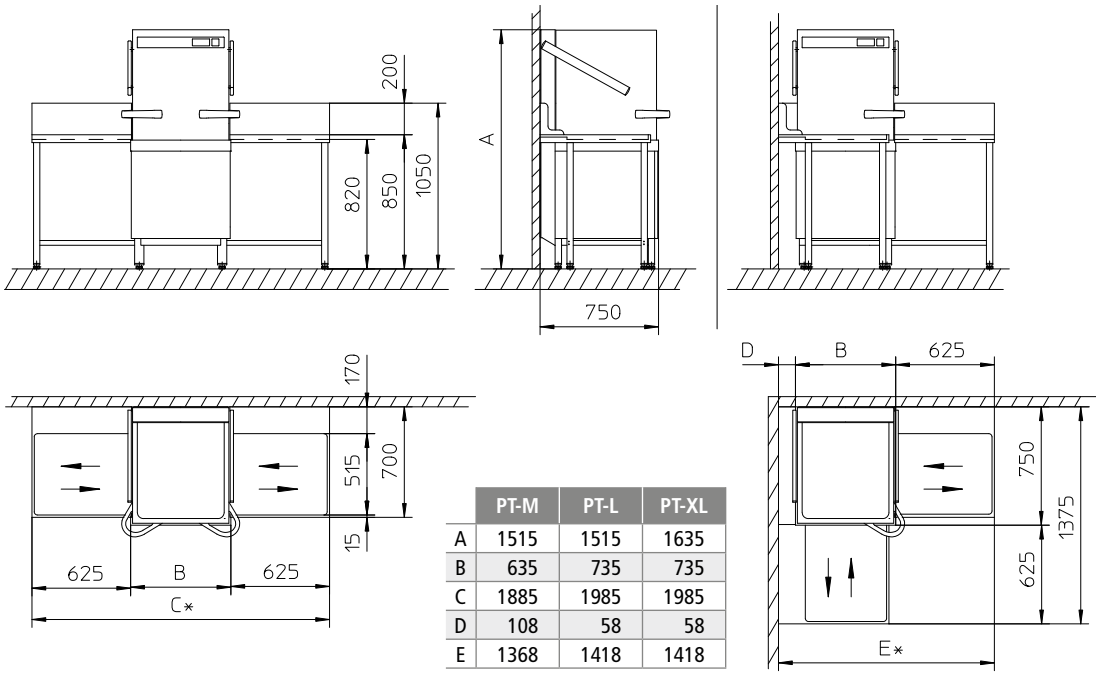

	PT-M	PT-L	PT-XL
A	1515	1515	1635
B	635	735	735
C	1885	1985	1985
D	108	58	58
E	1368	1418	1418

Table depth: 750 mm / table length: 625 mm – 2,900 mm

900 mm working height also available instead of 850 mm. Table depth 800 mm available on request.

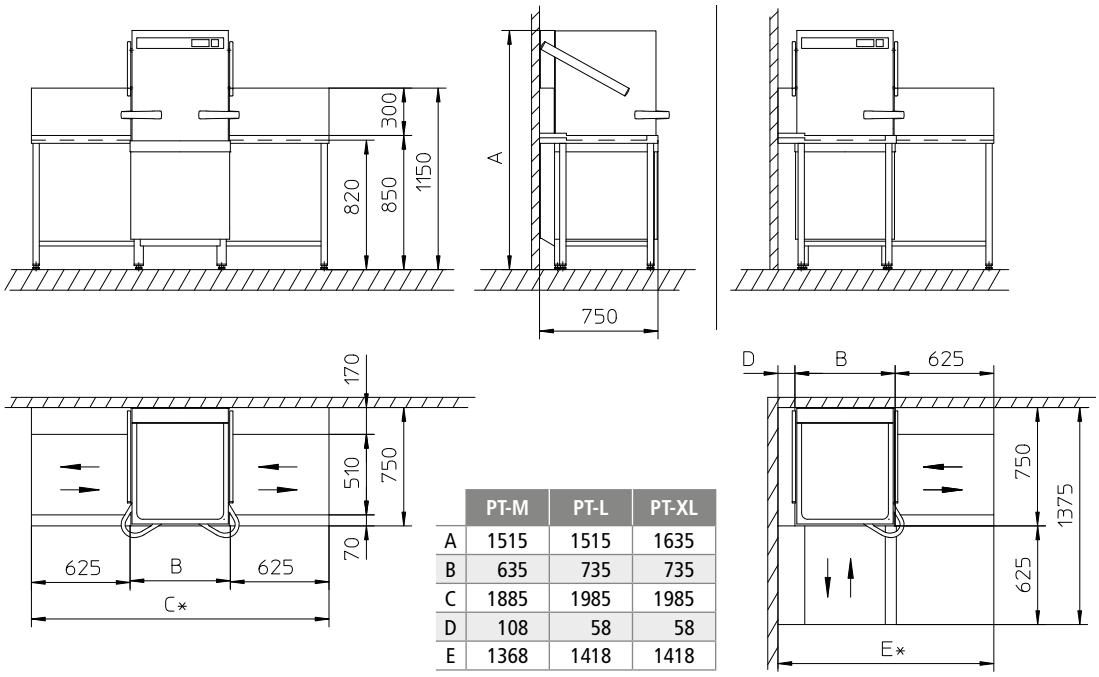

	PT-M	PT-L	PT-XL
A	1515	1515	1635
B	635	735	735
C	1885	1985	1985
D	108	58	58
E	1368	1418	1418

* Dimensions C and E depend on the table length. Table length 625 mm is shown.

Technical data

PT Series		PT-M	PT-L	PT-XL
Number of programmes		Up to 3 (+ special programmes)		
Theoretical capacity	[racks/h]	Differs depending on software, see page 25 above		
Water consumption				
Tank capacity	[l]	35	35	35
Rinse water consumption per cycle	[l]	Differs depending on software, see page 25 above		
Temperatures				
Tank temperature	[°C]	Differs depending on software, see page 25 above		
Rinse water temperature	[°C]	Differs depending on software, see page 25 above		
Dimensions				
Width	[mm]	635	735	735
Depth	[mm]	750	750	750
Height with hood closed	[mm]	1,515	1,515	1,635
Height with hood open	[mm]	1,995	1,995	2,235
Height for EnergyPlus design	[mm]	2,195	2,195	2,435
Working height	[mm]	850	850	850
Clear entry height	[mm]	440	440	560
Rack dimensions	[mm]	500 x 500	500 x 600	500 x 600
Electrical specifications				
Total connected load				
– Three-phase AC	[kW]	Differs by country and fuse protection, see page 25 below		
– Alternating current	[kW]	Differs by country and fuse protection, see page 25 below		
Fuse protection	[A]	Differs by country and fuse protection, see page 25 below		
Circulating pump (P1)	[kW]	1.0	1.5	1.5
Tank heating	[kW]	2.5	2.5	2.5
Tank heating for Cool design	[kW]	2 x 2.5	2 x 2.5	2 x 2.5
Boiler heating				
– Three-phase AC	[kW]	Differs by country and fuse protection, see page 25 below		
– Alternating current	[kW]	Differs by country and fuse protection, see page 25 below		
Other information				
Max. inlet water temperature	[°C]	60	60	60
Required water flow pressure	[bar/kPA]	1.0 – 6.0 / 100 – 600	1.0 – 6.0 / 100 – 600	1.0 – 6.0 / 100 – 600
Water flow pressure required for EnergyPlus design	[bar/kPA]	1.5 – 6.0 / 150 – 600	1.5 – 6.0 / 150 – 600	1.5 – 6.0 / 150 – 600
Splash guard		IP X5	IP X5	IP X5
Weight, net/gross	[kg]	134/159	137/165	140/171
– With EnergyPlus design, net/gross	[kg]	157/185	165/196	173/207

Subject to technical modifications.
Comparative calculations based on comparisons with predecessor GS 502.

Software settings

Glasswashers		Standard	Cool	EnergyPlus*5	HighTemp
Theoretical capacity 1/2/3*1	[racks/h]	22/32/48	22/32/48	22/32/48	–
Short programme	[racks/h]	38/55/77	38/55/77	38/55/77	–
Rinse water consumption per cycle (driven rinse system)*2	[l]	2.4 (2.0)	4.0 (3.6)	2.4 (2.0)	–
Tank temperature	[°C]	62	55	62	–
Rinse water temperature	[°C]	65	*3/*4	65	–
Dishwashers					
Theoretical capacity 1/2/3*1	[racks/h]	44/32/22	–	44/32/22	25/20/15
Short programme	[racks/h]	72/55/38	–	72/55/38	–
Rinse water consumption per cycle (driven rinse system)*2	[l]	2.4 (2.0)	–	2.4 (2.0)	3.8 (3.8)
Tank temperature	[°C]	62	–	62	66
Rinse water temperature	[°C]	85	–	85	85
Bistro dishwashers					
Theoretical capacity 1/2/3*1	[racks/h]	40/32/28	–	40/32/28	–
Short programme	[racks/h]	72/55/49	–	72/55/49	–
Rinse water consumption per cycle (driven rinse system)*2	[l]	2.4 (2.0)	–	2.4 (2.0)	–
Tank temperature	[°C]	62	–	62	–
Rinse water temperature	[°C]	85	–	85	–
Cutlery washers					
Theoretical capacity 1/2/3*1	[racks/h]	11	–	11	–
Short programme	[racks/h]	21	–	21	–
Rinse water consumption per cycle (driven rinse system)*2	[l]	4.0 (3.6)	–	4.0 (3.6)	–
Tank temperature	[°C]	69	–	69	–
Rinse water temperature	[°C]	86	–	86	–

*1 Depending on conditions on-site (inlet water temperature/electrical supply), the values specified may be reduced.
*2 Non-binding information. The actual need for rinse water can vary depending on the on-site conditions.
*3 Depending on the inlet water temperature.
*4 Can be switched to 65 °C.
*5 Inlet water temperature < 20 °C.
*6 Can be switched to 85 °C.

Electrical specifications

Voltage	Fuse protection	Total connected load with 6.4 kW boiler heating element	Total connected load with 10.8 kW boiler heating element	Countries
380 V / 3N~ / 50–60 Hz	16 A	7.1 kW	8.3 kW	Global
400 V / 3N~ / 50–60 Hz	16 A 25 A 32 A	7.9 kW/8.1 kW as Cool version 10.2 kW –/11.5 kW as Cool version	9.1 kW 13.2 kW 14.7 kW	
415 V / 3N~ / 50–60 Hz	15 A 16 A/20 A 25 A 32 A	6.9 kW 8.4 kW/8.6 kW as Cool version 10.9 kW –/12.4 kW as Cool version	9.5 kW 9.7 kW 14.2 kW 15.7 kW	
200 V / 3N~ / 50–60 Hz	25 A 32 A	6.6 kW 8.0 kW	7.1 kW 8.1 kW	Japan
230 V / 3N~ / 50–60 Hz	25 A 32 A 50 A	7.8 kW 10.1 kW –	– – 14.5 kW	Belgium/Malaysia*
230 V / 1N~ / 50–60 Hz	32 A	6.9 kW	–	Global
240 V / 1N~ / 50–60 Hz	25 A 32 A 40 A 50 A	5.1 kW 6.8 kW 8.4 kW 10.9 kW	– – – –	

* Special voltage.

• Notes

winterhalter®



Winterhalter Gastronom GmbH
Commercial Dishwashing Systems

Winterhalterstrasse 2–12
88074 Meckenbeuren
Germany
Telephone +49 75 42 4 02-0
Telefax +49 75 42 4 09 89-327

www.winterhalter.biz
info@winterhalter.biz

01/18 30002243 Subject to technical modifications.