CP NEXT



Cp Next, the Irinox ecological propane holding cabinet, encloses in compact dimensions all the technical and functional know-how that allows the professional to set and maintain the chosen temperature constant, manage the most suitable humidity level for the stored products, distribute evenly on all positioned trays a gentle ventilation that does not dry out the products. On the contrary, it keeps its nutritional values, aromas, colours and consistency intact.

Capacity

	Double door	Single door
Number of trays (600x800) pitch 35 mm	37	42
Number of trays (600x800) pitch 52.5 mm	26	28
Number of trays (600x400) pitch 35 mm	76	84
Number of trays (600x400) pitch 52.5 mm	52	56
Internal cell volume according to EN 16825 (liters)	652	646

Standard construction details

- Standard door opening on the right with hinges on the right.
- Double bevel door.
- Closure of magnetic and slowed door
- Double doors right opening (hinges on the right) with door stop opening 130°.
- Ergonomic and robust handle made of steel.
- Internal lighting with double led bar
- 4.3" capacitive touch screen display
- Door seal with 5 chambers to guarantee a better temperature seal.
- Internal and external structure completely in AISI 304 stainless steel.
- Built-in air condensation.
- High efficiency cooling system with R290 natural refrigerant gas.
- Fast, effective, innovative adaptive hot gas defrosting allows you to manage and set the time bands of use, to avoid sudden changes in the storage temperature.
- Adaptive smart defrosting with the possibility of setting the time bands of use.
- Top of the conservator with a thickness of 135 mm in high-density polyurethane foam (42 kg/m^3)
- Bottom of the conservator with a thickness of 90 mm in high-density polyurethane foam (42 kg/m^3)
- Closing material of the evaporating compartment with a thickness of 40 mm in high density polyurethane foam
- USB port for HACCP download.
- Innovative, patented air distribution system allows perfect air distribution on each shelf for the entire height of the cell. The double conveyance generates three air flows, one central and two lateral, to guarantee a constantly uniform ventilation.
- Passive humidity management created by the perfect balance between the size of the evaporator, the power of the variable speed fans and the power of the compressor

Operation

4 types of door available:

Single steel door: allows you to make the most of the load capacity of the conservator.
Double steel door: ideal for optimizing storage in case of intensive use with a high number of daily door openings.
Single glass door: allows you to make the most of the load capacity of the conservator, ideal for use as a display unit.
Double glass door: ideal for optimizing storage in case of intensive use with a high number of daily door openings and when used as a display unit.

2 operating modes available:

Multi: with operating temperatures from -25° to +15°C, with the possibility of setting the conservator on 3 different temperatures: Negative (-25° / -5°), Chocolate (+10° / +15°) or Positive (-5° / +15°), for maximum flexibility of use.
Up: with operating temperatures from -5° to +15°C, with the possibility of setting the conservator on 2 different temperatures: Positive (-5° / +15°) or Chocolate (+10° / +15°).

Humidity management

Passive humidity regulation with the selection of 6 different humidity levels (from 40% to 95% RH). The humidity control is active only if the conservator temperature is above 0°C.

Interface

4.3" display with capacitive colour screen. Equipped with buzzer.

Connectivity

FreshCloud® is Irinox's IOT technology that allows you to control and interact with Cp Next at any time via an APP.
The application features are:

- Remote monitoring of the operation and parameters of the cycle in progress
- Push notification system
- Usage statistics viewing
- HACCP data backup

Optional

- Sanigen® (Irinox patented sanitization system).
- Water condensation available for CP Next Multi.
- Pairs of additional tray guides.
- 4 wheels, 2 of which with brake.
- Lowered feet.
- Door reversibility hinge kit
- Stainless steel spacers for positioning several CP Next units side by side.
- Packing in HT wooden case.
- Special voltages on request.
- Door stop 120° only for CP Next stainless steel single door.

Product warranty

- 2 years from the date of installation, after sending the installation report, on the parts (see warranty condition).

CP NEXT

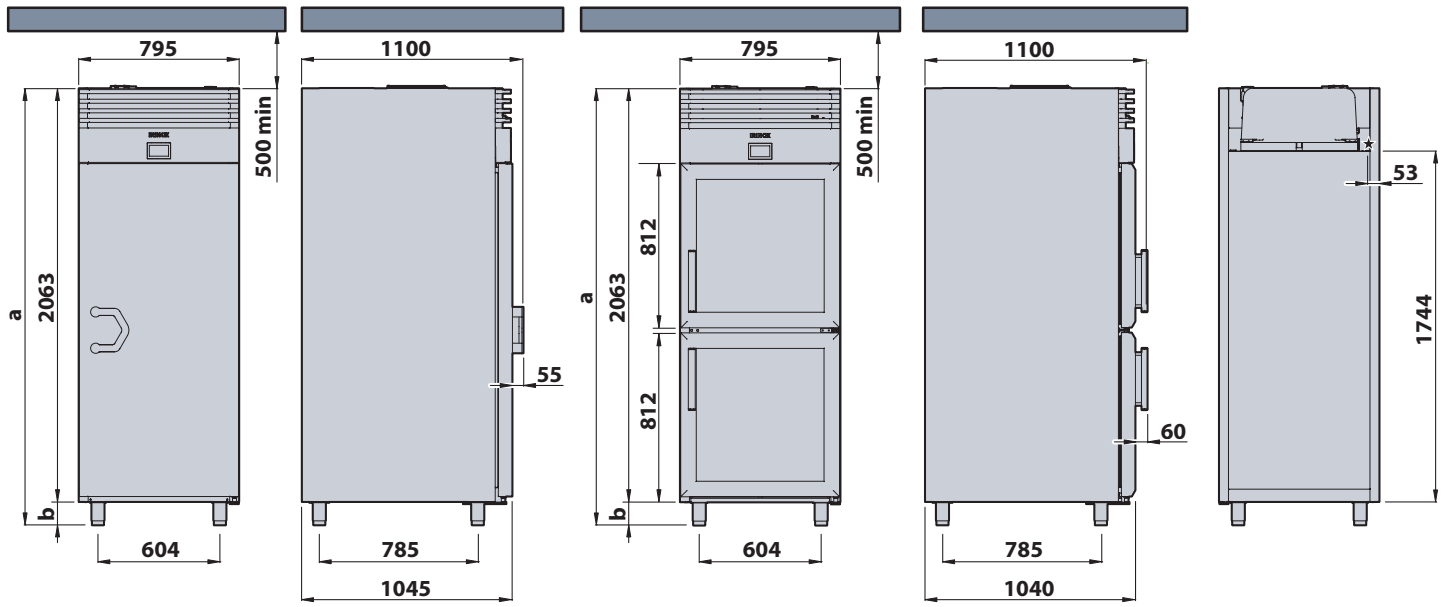

HEIGHT

		a	b
Standard feet	mm	2178 - 2228	115 ÷ 165
Lowered feet option	mm	2143 - 2178	80 ÷ 115
Wheel options	mm	2218	155

Measures in millimetres

★ **Main power cable**

TECHNICAL SPECIFICATIONS

Electric supply:		220-240V -1N+PE 50Hz					
Performance		UP		MULTI			
Condensation type		AIR COOLED		AIR COOLED		WATER COOLED	
Configuration		BLIND DOOR	GLASS DOOR	BLIND DOOR	GLASS DOOR	BLIND DOOR	GLASS DOOR
Power rating	W	641	742	1106	1207	1092	1192
Full load amps (FLA)	A	3,97	4,41	6,70	7,14	6,58	7,02
Main power cable	mm^2	3G1.5		3G1.5		3G1.5	
Refrigeration yield (-10/+40°C; Tsuct +20°C; Subcooling 0°C)	W	694		1729		1729	
MAX Condenser rating (-10/+40°C; Tsuct+20°C; Subcooling 0°C)	W	1027		2514		2514	
MIN air flow for ventilation	m^3/h	680		950		-	
IN/OUT water connections	NPTf	-		-		3/4"	
MAX water consumption (IN temp +30°C/ OUT temp +35°C)	l/h	-		-		440	
MIN/MAX inlet water temperature (water loop)	°C	-		-		+10 / +22 °C	
MIN/MAX inlet water temperature (water tower)	°C	-		-		+23 / +35 °C	
Refrigerant type	-	R290 - 0.15 kg		R290 - 0.15 kg		R290 - 0.11 kg	
Climate class	-	class 5 = 40°C - 40% relative humidity		class 5 = 40°C - 40% relative humidity			
Cabinet dimension (WIDTH x DEPTH)	mm	795 x 1100		795 x 1100			
Internal cell dimension (WIDTH x DEPTH x HEIGHT)	mm	635 x 835 x 1500		635 x 835 x 1500			
Cabinet weight	kg	210	235	210	235	210	235

ENERGY CONSUMPTION

Electric supply:		220-240V -1N+PE 50Hz			
Performance		UP		MULTI	
Configuration		SINGLE BLIND DOOR	DOUBLE BLIND DOOR	SINGLE BLIND DOOR	DOUBLE BLIND DOOR
Energy class (according to UE regulation 2015/1094)		C	C	D	C
Annual energy consumption (AEC)	kWh/year	832	741	2986	2117

INSTALLATION
The holding cabinet must be installed following and complying with what is stated in the appropriate installation manual
The contents of the manual must be carefully followed to ensure correct operation and to protect the user's rights under the warranty.
Continuous product development may require changes to specifications without notice.

Irinox SpA
Headquarter: Via Madonna di Loreto, 6/B - 31020 - Corbanese di Tarzo (TV) Italy
Productive Site: Via Mattei, 20 - 31029 - Vittorio Veneto (TV) Italy
Tel. +39 0438 2020 | irinox@irinox.com | www.irinoxprofessional.com

CE