SIMPLY STAINLESS

Modular Sinks, Tables & Shelving

INDUSTRY KITCHENS

www.industrykitchens.com.au 1800 611 058



07-6-1200L



07-6-1200R

*Units 1200mm to 1800mm have 4 legs.



07-7-2100L



07-7-2100R

* Units 2100mm have 6 legs.

SPECIFICATION	
Tops	- High quality 304 grade stainless steel. - 1.2mm gauge, no. 4 Finnish. - 100mm upstand (150mm bevelled upstand on 700 series)
Core	- 1.2mm top hat stiffening channels. - Stainless steel sockets.
Frames	- Ø38mm round stainless steel tube. - Satin polished. - Machined collars. - Adjustable stainless disc feet.
Undershelves	- High quality stainless steel. - 1.2mm gauge, no. 4 Finnish. - Top hat stiffening with channels.

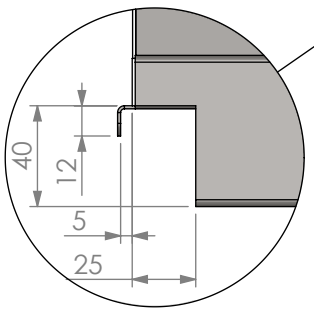

NOTCH DETAIL

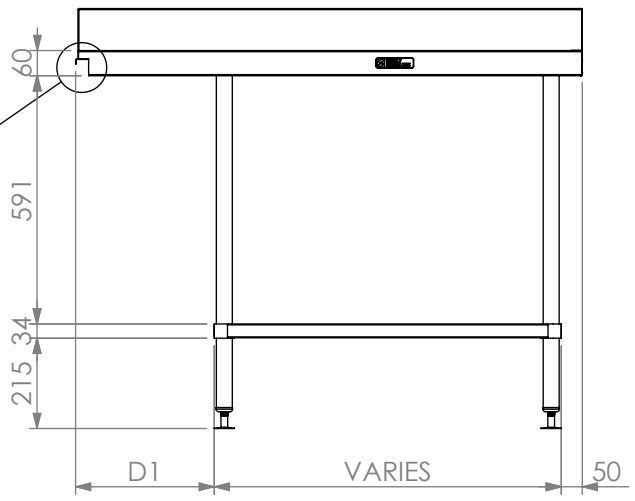

FRONT ELEVATION

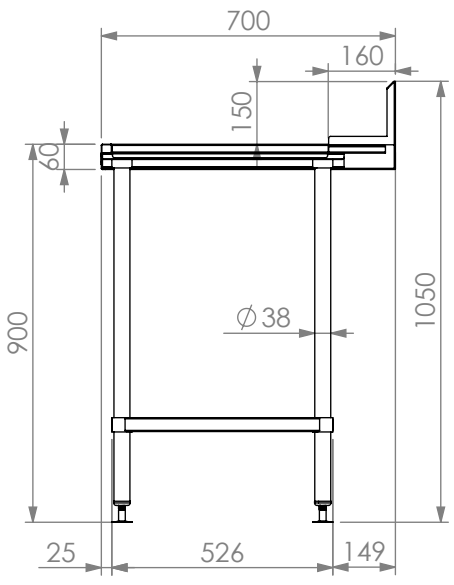

*700mm DEEP MODULE ELEVATION.

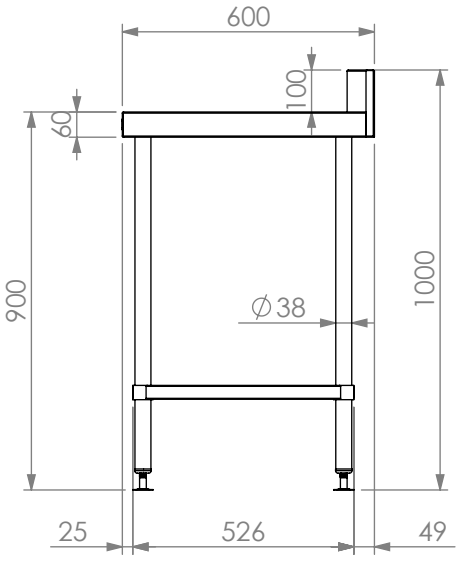

*600mm DEEP MODULE ELEVATION.

	Dishwash Outlet Bench				
	Product Code	**Dimensions (mm)**	**D1(mm)**	**Unit weight (Kg)**	**Load capacity (Kg)**
07	07-6-1200 (L,R)	1200x600x900	330	27	90
	07-6-1500 (L,R)	1500x600x900	330	33	130
	07-6-1650 (L,R)	1650x600x900	330	34	130
	07-6-1800 (L,R)	1800x600x900	330	38	130
	07-6-2100 (L,R)	2100x600x900	180	47	130
	07-7-1200 (L,R)	1200x700x900	180	33	130
	07-7-1500 (L,R)	1500x700x900	330	34	130
	07-7-1650 (L,R)	1650x700x900	330	41	130
	07-7-1800 (L,R)	1800x700x900	330	43	130
	07-7-2100 (L,R)	2100x700x900	330	54	130

100% RECYCLABLE STAINLESS STEEL

100% RECYCLED 100% RECYCLABLE