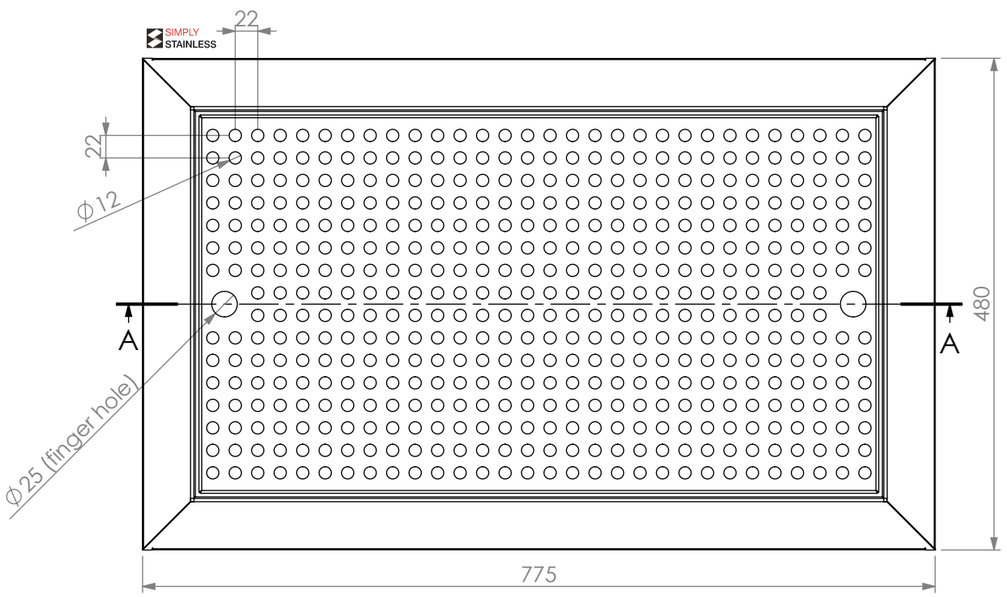

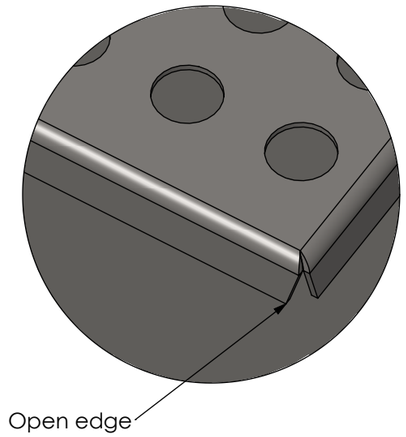

DETAIL C

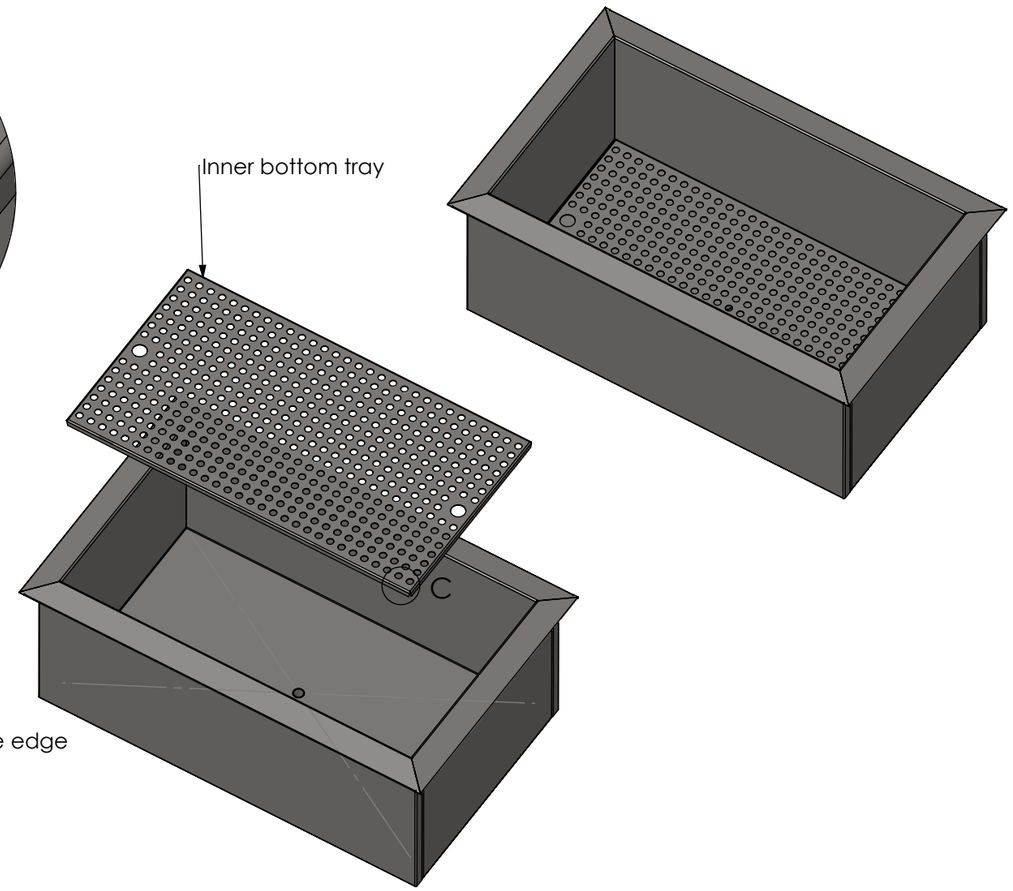

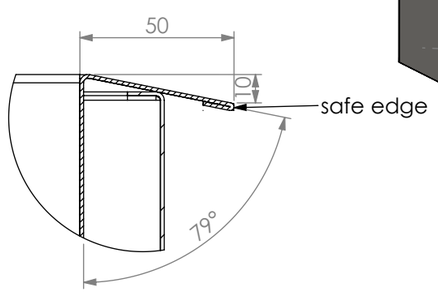

DETAIL B

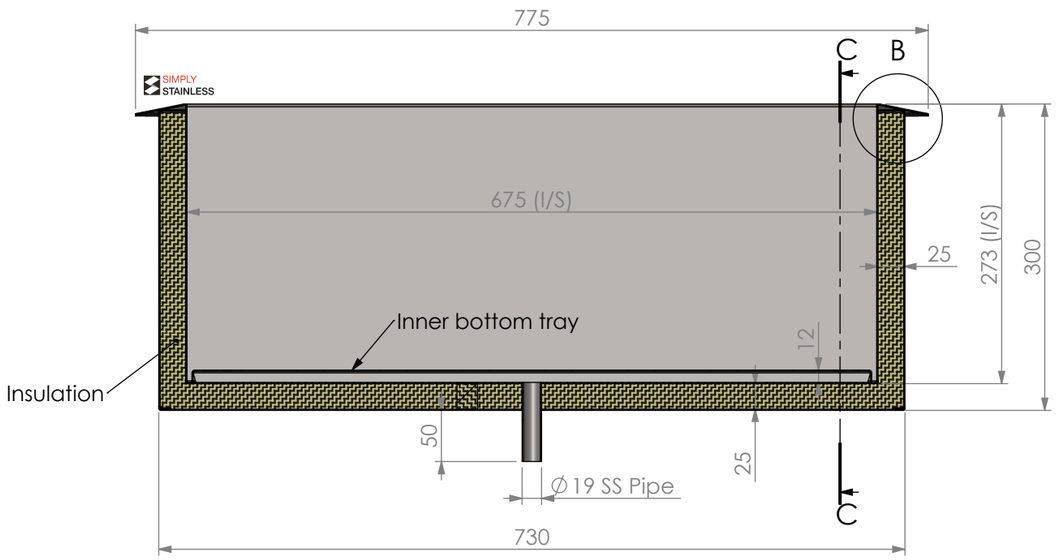

SECTION A-A

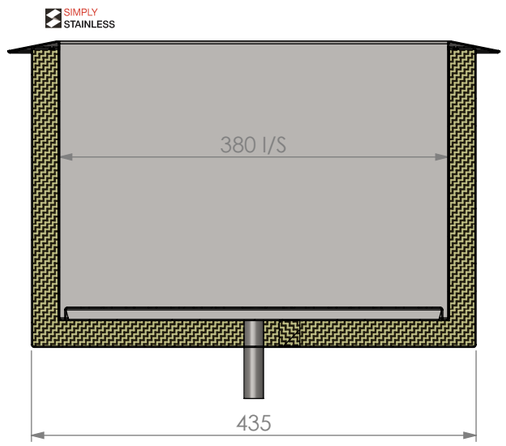

SECTION C-C

SIMPLY STAINLESS

Modular Sinks, Tables & Shelving

COPYRIGHT © 2023
This drawing is the property of CI GROUP PTY LTD. Tradings as SIMPLY STAINLESS and It may not be copied, reproduced or modified in whole or in part without prior written permission of CI GROUP PTY LTD. SIMPLY STAINLESS reserves the right to change specification and design without notice.

41-IWB
ICE WELL BIG

SIZE: A3 SCALE: 1:6

CONSTRUCTION NOTES :

1. MADE FROM 1.2mm STAINLESS STEEL.
2. CUT OUT REQUIRED 735mm X 440mm.
3. LITER CAPACITY = 65L.

100% RECYCLABLE STAINLESS STEEL

100% RECYCLED 100% RECYCLABLE