Bar Refrigeration

TBR52-RISZ1-L-S-11-2

Bar Refrigerator, Stainless Steel Ext, 2 Glass Slide Doors



Dimensions	
External Width (mm)	1321
External Depth (mm)	631
External Height (mm)	881
Exclusions	Depth does not include 16 mm for door handle. Height does not include 7 mm for leg levelers.
Gross Volume (Litres)	480
Supplied Shelves	6
Shelf Size (L x D mm)	437 x 458
Internal Net Height (mm)	730
Unpackaged Weight (kg)	148
Packaged Weight (kg)	159
Packaged Dimensions (W x D x H mm)	1486 x 724 x 1067
Supplied with	Levelling Screws. Optional castors sold seperately.

Build	
Door Description	2 Full Glass Slide Doors
Exterior Construction	Stainless Steel front and countertop. Matching Aluminium sides & rear.
Interior Construction	Stainless Steel
Air Intake Position	Front
Ventilation Position	Front
Clearance Required	Zero back and sides
Cord Length (Meters)	3.04
Internal Lighting	TruLumina®
Standard w/ Locks	Not Standard. Options available.

Technical	
Temperature Range	0.5 : 3.3°C
Refrigerant	R290
Voltage/Frequency/Phase	220-240V/50-60Hz/1
Amps	1.3
Watts	299
Defrost Type	Auto

7 YEARS WARRANTY PARTS, COMPRESSOR & LABOUR

natural refrigerant.

Specifications subject to change without notice.
Chart dimensions rounded up to the next whole millimeter (inches rounded up to the 1/8")

UK & Ireland 0800 783 2049 TFIUK@truemfg.com
EMEA +41 61 563 07 05 TrueCHCustomerService@truemfg.com
Australia +61 2 9619 9999 TrueRefAus@truemfg.com

Bar Refrigeration

TBR52-RISZ1-L-S-11-2

Bar Refrigerator, Stainless Steel Ext, 2 Glass Slide Doors

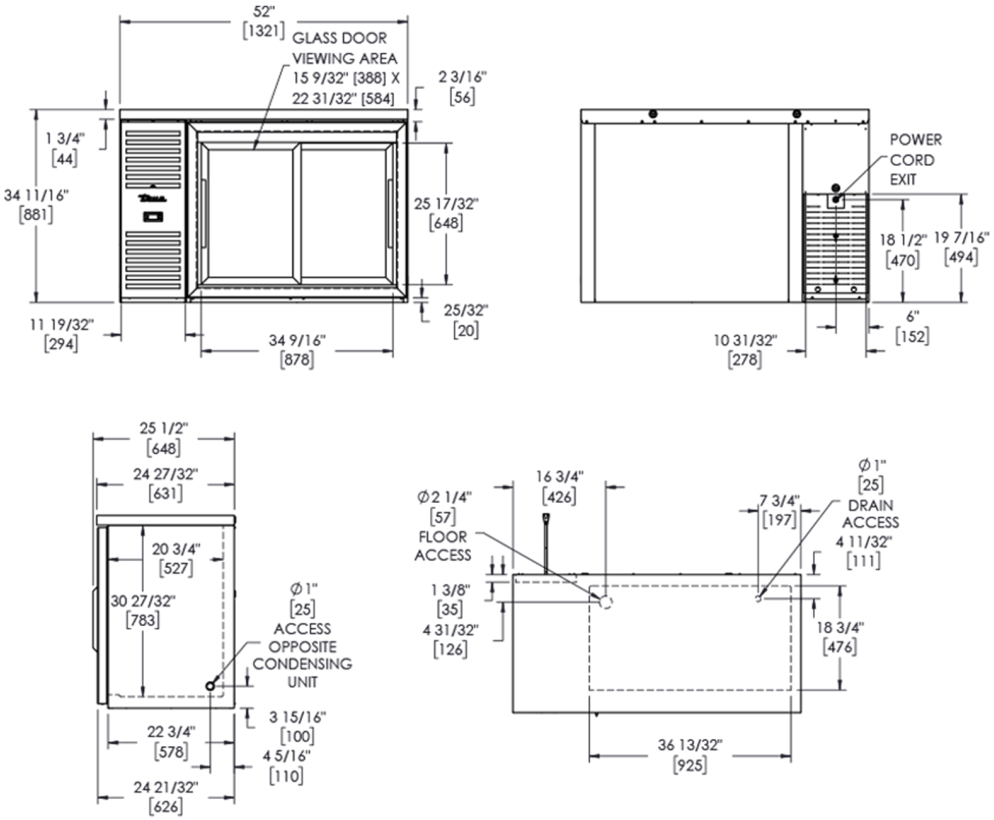

Specifications subject to change without notice.
Chart dimensions rounded up to the next whole millimeter (inches rounded up to the 1/8")

UK & Ireland	0800 783 2049	TFIUK@truemfg.com
EMEA	+41 61 563 07 05	TrueCHCustomerService@truemfg.com
Australia	+61 2 9619 9999	TrueRefAus@truemfg.com