Advance® Container

Models: VM15981 (0.9 Litre), VM15978 (1.4 Litre)

Greater Efficiency and Speed of Service

The Advance® container creates faster, smoother pouring and has a longer container and blade life.



VM15981 pictured

Features

- Unique shape and design improves pourability, resulting in time and cost savings and an improved speed of service
- Built-in, dripless spout means less mess and waste
- Superior durability with double sealed bearings, provides a longer blade life
- Shatter-proof polycarbonate stackable container complete with Advance® blade assembly and lid
- Operates with current machine programming or allows for new, more efficient programming
- Sizes available: 1.4 litres, 0.9 litres



Unique shape and design

VM15981 and VM15978

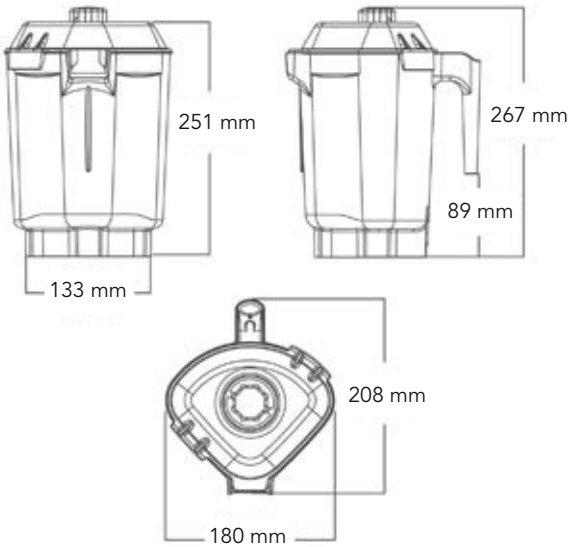

Specifications

Material:	Polycarbonate	
Description:	High-impact, clear/stackable, complete with Advance blade assembly and lid	
Model No:	VM15981 (0.9 litre)	VM15978 (1.4 litre)

Compatible Machines

VM15981 (0.9 litre)	Drink Machine Advance®, T&G® 2 Blending Station®
VM15978 (1.4 litre)	Blending Station® Advance®, Portion Blending System® Advance®

0716

All dimensions are nominal only.
Covered by 3 years warranty (1 year parts and labour followed by 2 years parts only).
Conditions apply. Refer to our Terms & Conditions of Trade.

Distributed by: ROBAND AUSTRALIA PTY LTD