Waldorf Bold

INDUSTRY KITCHENS
www.industrykitchens.com.au 1800 611 058

Gas Chargrill 600mm

CHLB8600G-B, CHLB8600G-LS, CHLB8600G-CD



CHLB8600G-CD

- Heavy-duty construction
- Reversible heavy-duty top grates
- Interchangeable drop on griddle plates
- 33MJ/hr stainless steel burners per 300mm section
- Stainless steel exterior
- Black vitreous enamel finish to front panels
- Easy clean
- Easy service
- Fully modular

Series Options

CHLB - Low back models
CHB - 215mm splashback option

OVERALL CONSTRUCTION

CHARGRILL

- 2.5mm thick 304 stainless steel side splash guards
- Welded 1.5mm 304 stainless steel bull nose
- Welded splashback and side panels 1.2mm 304 stainless steel
- Front panels 0.9mm 304 stainless steel
- Front grease channel
- Welded 1.2mm 304 stainless steel grease drawers
- 1.5mm hot rolled steel burner box
- Aluminised steel grease drawer baffles
- Insulated sides

BENCH MOUNT (SUPPLIED AS -B MODEL)

- Four 63mm dia. heavy-duty 1.2mm 304 stainless bench legs with adjustable feet
- Adjustable height 80mm-105mm

LEG STAND (SUPPLIED AS -LS MODEL)

- Fully modular for matched suite finish
- Framed top for connection to Chargrill
- 63mm dia. heavy-duty 1.2mm 304 stainless steel legs with adjustable feet
- Fully modular framed stand shelf with 0.9mm 304 stainless steel finish
- Quick assembly design (no tools required)

CABINET BASE (SUPPLIED AS -CD MODEL)

- Fully modular for matched suite finish
- Double skin 0.9mm 304 stainless steel interior and exterior
- 1/1GN 4 position racking
- 63mm dia. heavy-duty 1.2mm 304 stainless steel legs with adjustable feet

GRATES AND RADIANTS AND BAFFLES

- 150mm wide x 550mm top grate sections
- Top grates reversible for level or inclined use
- Inclined position incorporates flare reducing grate fin design with grooves to run grease into front collection channel
- Heavy weight castings for high demand performance
- Heavy-duty high efficiency cast iron burner radiants
- Improves heat retention and protects burners
- Baffles over grease drawers to reduce grease collection flare ups

GRIDDLE PLATES

- Optional extra 300mm wide x 550mm deep drop on cast iron griddle sections.
- Machined smooth surface finish
- Interchangeable in any position with 2 or 3 sections of top grate
- Multiple griddle sections can be mixed in any positions

BURNERS

- Full 304 stainless steel burners
- 1 x 33MJ/hr stainless steel burner per 300mm section
- Removable for cleaning
- Full pilot and flame failure protection per burner

CONTROLS

- Individual Hi-Lo gas control to each burner with flame failure and pilot
- Large easy use control knob - heat resistant reinforced
- Easy view control settings on knob
- Piezo ignition to pilot burner

CLEANING AND SERVICING

- Easy clean stainless steel external finish
- Lift out radiants, burners and grease tray baffles
- All burner box interior parts lift out for full cleaning access
- Deep stainless steel grease collection drawers
- Access to all parts from front of unit

Waldorf Bold

Gas Chargrill 600mm

CHLB8600G-B

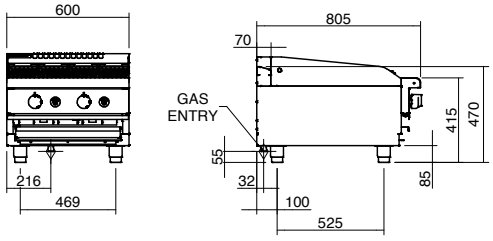

CHLB8600G-LS/CD

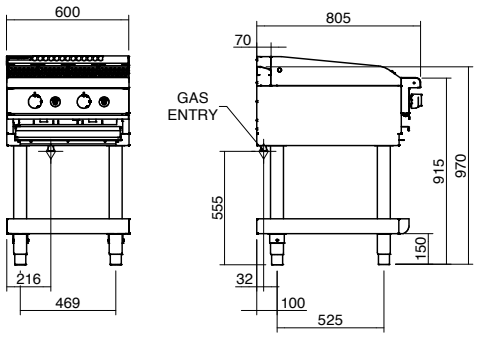

CHLB8600G

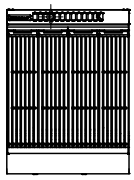

SPECIFICATIONS

Burners
33MJ/hr 304 stainless steel U-burner per 300mm section

Gas power
66MJ/hr, 18.3kW

Cooking surface area
592mm x 500mm, 2960cm2

Gas connection
R ¾ (BSP) male
216mm from LH side, 32mm from rear, and 555mm from floor
All units supplied with Natural and LP gas regulator

Dimensions
Width 600mm
Depth 805mm
Height 915mm
Incl. low back 970mm
(Bench models 470mm)
Incl. splashback option 1130mm
(Bench models 630mm)

Nett weight
Bench/Leg Stand models
128kg
Cabinet Base model
130kg

Packing data
Bench/Leg Stand models
0.48m3, 171kg
Width 645mm
Depth 870mm
Height 855mm
Cabinet Base model
0.70m3, 189kg
Width 645mm
Depth 870mm
Height 1255mm

Gas types
Available in Natural gas and LP gas
Please specify when ordering
Units supplied complete with gas type conversion kits
Other gas types on request

OPTIONS AT EXTRA COST

Griddle plates 300mm drop on
Joining caps
Castors
Plinth mounting
Straight grates

moffat.com.au
moffat.co.nz

Australia
moffat.com.au

Moffat Pty Limited

Victoria/Tasmania
740 Springvale Road
Mulgrave, Victoria 3170
Telephone +613-9518 3888
Facsimile +613-9518 3833
vsales@moffat.com.au

New South Wales
Telephone +612-8833 4111
nswsales@moffat.com.au

South Australia
Telephone -613-9518 3888
vsales@moffat.com.au

Queensland
Telephone +617-3630 8600
qldsales@moffat.com.au

Western Australia
Telephone 618-9413 2400
wasales@moffat.com.au

New Zealand
moffat.co.nz

Moffat Limited

Rolleston
45 Illinois Drive
Izone Business Hub
Rolleston 7675
Telephone +64 3-983 6600
Facsimile +64 3-983 6660
sales@moffat.co.nz

Auckland
Telephone +64 9-574 3150
sales@moffat.co.nz

24:7 Service Support

ISO9001
Quality Management Standard

Designed and manufactured by

ISO9001
All Waldorf Bold products are designed and manufactured by Moffat using the internationally recognised ISO9001 quality management system, covering design, manufacture and final inspection, ensuring consistent high quality at all times.

In line with policy to continually develop and improve its products, Moffat Limited reserves the right to change specifications and design without notice.

© Copyright Moffat Ltd

AN.WBD.S.02.19