INDUSTRY KITCHENS
www.industrykitchens.com.au 1800 611 058

XEVL-2021-YPRS

Project
Item
Quantity
Date

Model
CHEFTOP MIND.Maps™ PLUS BIG

Combi oven	Electric
20 trays GN 2/1	Hinge on the left side
9.5" Touch control panel	
Voltage: 380-415V 3N~	



Description
Technologically advanced combi oven for gastronomy cooking processes (dehydrating, steaming, low temperature cooking, sous vide cooking, roasting, grilling, pan frying, regeneration and plate regeneration) and for fresh or frozen baking thanks to Unox Intensive Cooking and Intelligence Performance technologies which guarantee perfect results and repeatability for any load size. Automatic management of cooking processes (CHEFUNOX) for perfect results even without trained staff.

Standard cooking features

Programs
- **1000+** Programs
- **CHEFUNOX:** choose something to cook from the library and the oven will automatically set all the parameters
- **MULTI.TIME:** manages up to 10 cooking processes at the same time
- **MISE.EN.PLACE:** synchronises the insertion of pans so that all the dishes are ready at the same time
- **MIND.Maps™:** draw the cooking processes directly on the display
- **READY.COOK:** ready to use settings with infinite time for a quick start

Manual cooking
- **Temperature:** 30 °C – 300 °C
- Up to 9 cooking steps
- **CLIMA.Control:** humidity or dry air set by 10%
- Delta T cooking with core probe
- MULTI.Point core probe with 4 measuring points
- SOUS-VIDE core probe with 2 measuring points (optional accessory)

Advanced and automatic cooking features

Unox Intelligent Performance
- **ADAPTIVE.Cooking™:** automatically regulates the cooking parameters to ensure repeatable results
- **CLIMALUX™:** total control of the humidity in the cooking chamber
- **SMART.Preheating:** automatically sets the preheating temperature and duration
- **AUTO.Soft:** manages the heat rise to make it more delicate
- **SENSE.Klean:** estimates how dirty the oven is and suggests the appropriate automatic washing cycle

Unox Intensive Cooking
- **DRY.Maxi™:** rapidly extracts the humidity from the cooking chamber
- **STEAM.Maxi™:** produces saturated steam
- **AIR.Maxi™:** manage fans auto-reverse and pulse function
- **PRESSURE.Steam:** increases the steam saturation and temperature

XEVL-2021-YPRS

Key features

- **ROTOR.Klean™:** automatic washing system
- Automatic special washing behind the fan guard
- Moulded cooking chamber made of AISI 316 L stainless steel
- Triple glass
- Cooking chamber lighting through LED lights embedded in the door
- Tray supports with anti-tip system
- Drip collection system integrated in the door which works even when the door is open
- 6 motors with multiple fan system with reverse gear and high power intensity rectilinear heating elements
- Integrated DET&Rinse™ detergent container
- Integrated Wi-Fi
- **Wi-Fi / USB data:** download/upload HACCP data
- **Wi-Fi / USB data:** download/upload programs

App and web services

- **Data Driven Cooking app & webapp:** check and monitor in real-time the operating conditions of your ovens, create and share new recipes. Artificial intelligence transforms consumption data into useful information and allows you to increase daily profits
- **Top Training app:** download the Unox Top.Training app and learn step by step all the secrets of your new oven's control panel

Accessories

- QUICK.Load and trolley system
- **Cooking Essentials:** special trays
- **DET&Rinse™ PLUS:** cleaning and rinse agents to combine maximum cleanliness with minimum consumption and long life for your oven
- **DET&Rinse™ ECO:** eco formula for daily cleaning and the utmost respect for the environment. Ideal for mild level of dirt.
- **DET&Rinse™ ULTRA:** cleaning and rinse agents to combine maximum cleanliness with minimum consumption and long life for your oven
- **PURE:** resin-based filtering system that eliminates from the water all substances that contribute to the formation of limescale inside the oven cooking chamber
- Ethernet connection kit

XEVL-2021-YPRS

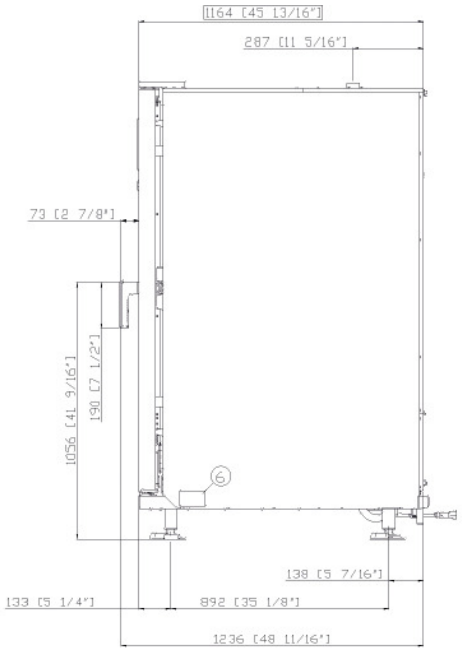

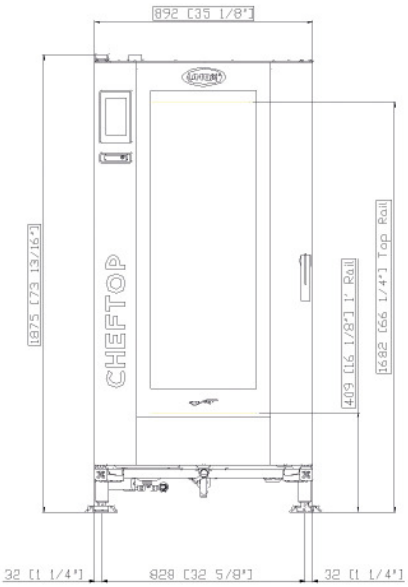

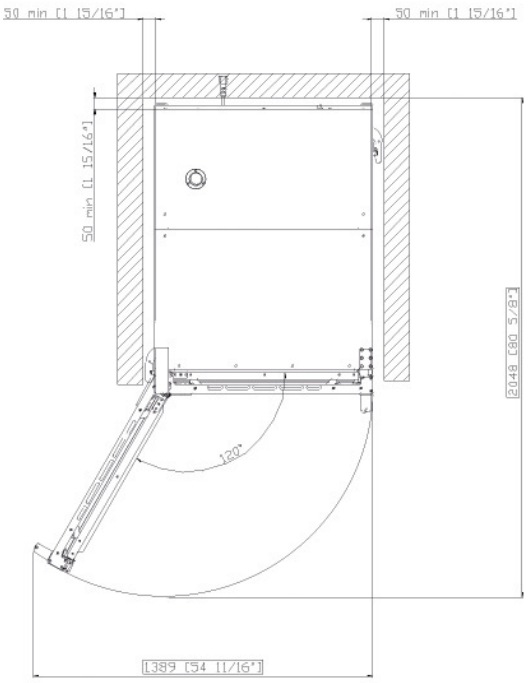

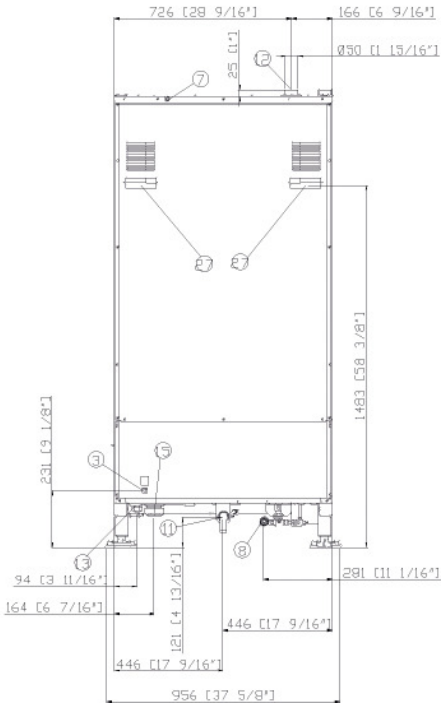

Dimensions and weight

Width	892 mm
Depth	1164 mm
Height	1875 mm
Net weight	339 kg
Tray pitch	67 mm

Connection positions

2	Terminal board power supply
3	Unipotential terminal
6	Technical data plate
7	Safety thermostat
8	3/4" female NPT water inlet
10	Rotor.KLEAN™ inlet
11	Chamber drain pipe
12	Hot fumes exhaust chimney
13	Accessories connection
27	Cooling air outlet

XEVL-2021-YPRS

Electrical power supply

STANDARD	
Voltage	380-415 V
Phase	~3PH+N+PE
Frequency	50 / 60 Hz
Total power	65 kW
Max Amp draw	96.5 A
Required breaker size	100 A
Power cable requirements*	5G x 25 mm^2
Plug	NOT INCLUDED

*Recommended size - observe local ordinance. Cable not included.

Water Supply

USING A WATER SUPPLY THAT DOES NOT MEET UNOX'S MINIMUM WATER QUALITY STANDARDS WILL VOID ANY WARRANTY.
It is the responsibility of the purchaser to ensure that the incoming water supply is compliant with the listed specifications through adequate treatment measures.

Line pressure:	Drinking water inlet: 3/4" NPT, line pressure: 22 to 87 psi; 1.5 to 6 Bar (29 psi; 2 Bar recommended)

Inflow water specifications	
Free chlorine	≤ 0.5 ppm
Chloramine	≤ 0.1 ppm
pH	7 - 8.5
Electrical conductivity	≤ 1000 µS/cm
Total hardness	≤ 30 °dH

Steam circuit: inflow water specifications	
Total hardness	≤ 8 °dH
Chlorides	≤ 250 ppm

To avoid the formation of limescale the incoming water must have total hardness ≤ 8°dH.

*This value refers to daily steam cooking of 1-2 hours. In any case, if with a total hardness ≤ 8°dH there is still production of limescale, it is mandatory to treat the water in order to avoid limescale production. Unox recommends water treatment systems based on ion exchange resins. Water treatment systems based on polyphosphate are not allowed.

Installation requirements

Installations must comply with all local electrical systems, particularly as for minimum wire gauge required for field connection, hydraulic and ventilation supply. Exhaust and fume analysis must be performed in case of gas ovens.

Register to DDC Service to access data and product specifications.
www.ddc.unox.com