ZANUSSI PROFESSIONAL

INDUSTRY KITCHENS
www.industrykitchens.com.au 1800 611 058

ITEM #

MODEL #

NAME #

SIS #

AIA #

Modular Cooking Range Line EVO900 1/2 Module Ambient Worktop



392158 (Z9WTNDN000) Ambient worktop with closed front, 1/2 module

Short Form Specification

Item No.

To be installed on EVO900 refrigerated base, open base cupboard, bridging supports or cantilever systems. Constructed in stainless steel with Scotch Brite finish. Worktop in 20/10, stainless steel. Right angled side edges eliminate gaps and possible dirt traps between units.

Main Features

- Heavy duty internal frame in Stainless steel.
- Unit to be installed on other 900 line bases.
- Right angled side edges eliminate gaps and possible dirt traps between units.
- Suitable for countertop installation.

Construction

- Stainless steel top provides a heavy duty work surface under any load.
- Unit is 900mm deep to give a larger working surface area.

Optional Accessories

• Junction sealing kit	PNC 206086	❑
• Support for bridge type installation, 800 mm	PNC 206137	❑
• Support for bridge type installation, 1000 mm	PNC 206138	❑
• Support for bridge type installation, 1200 mm	PNC 206139	❑
• Support for bridge type installation, 1400 mm	PNC 206140	❑
• Support for bridge type installation, 1600 mm	PNC 206141	❑
• Support for bridge type installation, 400 mm	PNC 206154	❑
• Side handrail for right/left hand	PNC 206165	❑
• Frontal handrail 400 mm	PNC 206166	❑
• Frontal handrail 800 mm	PNC 206167	❑
• Half module overshelf	PNC 206183	❑
• Large handrail (portioning shelf) 400 mm	PNC 206185	❑
• Large handrail (portioning shelf) 800 mm	PNC 206186	❑
• Frontal handrail 1200 mm	PNC 206191	❑
• Frontal handrail 1600 mm	PNC 206192	❑
• Water column with swivel arm (water column extension not included)	PNC 206289	❑
• Water column extension	PNC 206290	❑
• Chimney upstand, 400 mm	PNC 206303	❑
• 2 side covering panels, height 250 mm, depth 900 mm	PNC 206321	❑

APPROVAL:

Modular Cooking Range Line
EVO900 1/2 Module Ambient Worktop

Front

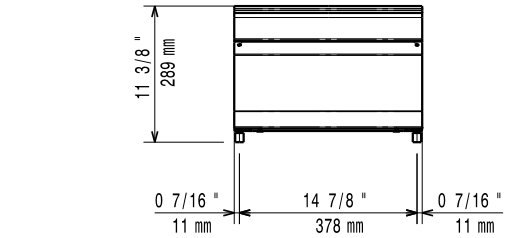

Side

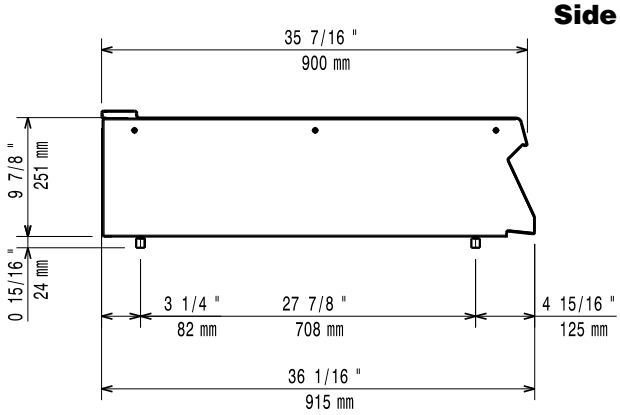

Top

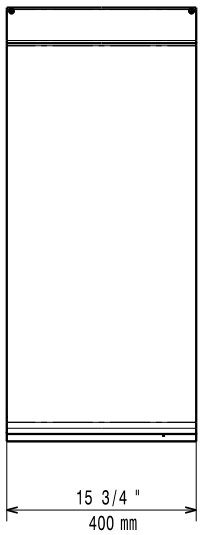

Key Information:

External dimensions, Width:	
392158 (Z9WTNDN000)	400 mm
External dimensions, Depth:	900 mm
External dimensions, Height:	250 mm
Net weight:	20 kg

The company reserves the right to make modifications to the products without prior notice. All information correct at time of printing.

2023.03.16