ITEM #

MODEL #

NAME #

SIS #

AIA #

Modular Cooking Range Line EVO900 Electric Bratt Pan 100lt with Duomat bottom, auto tilting



392421 (Z9BREJDPFM) 100-lt electric automatic tilting braising pan with Duomat cooking surface and water tap, energy control and thermostatic control, (Watermark) - Australia

Short Form Specification

Item No.

Infrared heating elements positioned below the cooking surface. Duomat cooking surface for roasting, browning, stewing, preparation of sauces, sautéing, boiling and braising. Can be installed on cantilever systems. Installation on wheels is not available. Includes mechanism to automatically tilt the pan and double-skinned lid in stainless steel. Cooking temperature can be set through thermostat and the energy input through an energy regulator. Exterior panels of unit in stainless steel with Scotch Brite finish. Right-angled side edges to allow flush-fitting junction between units.

Main Features

- Bratt pan ideal for sautéing, poaching, steaming, boiling, stewing and damp cooking.
- Duomat cooking surface allows to perform wet and dry cooking alternatively.
- Double–skin well and lid to reduce heat dispersion.
- Infrared heating elements mounted below the cooking surface.
- Lid is double-lined, insulated in 20/10 Stainless steel.
- IPX5 water resistance certification.
- Actual cooking temperature setting through adjustable thermostat.
- Working temperature can be set from 120 °C to 300 ° C.
- Energy input controlled by energy regulator.
- Heat-insulated: limited heat radiation and low energy consumption.
- Automatic tilting mechanism to facilitate pan emptying.
- Smooth large surfaces, easy access for cleaning.
- The special design of the control knob system guarantees against water infiltration.

Construction

- Cooking surface with ***Duomat*** bottom: a 10 mm-thick alloy obtained from the combination of 2 different stainless steels for better thermal stability and corrosion resistance.
- All pan internal surfaces round and polished for better hygiene.
- All exterior panels in Stainless Steel with Scotch Brite finishing.
- Model has right-angled side edges to allow flush fitting joints between units, eliminating gaps and possible dirt traps.
- Usable capacity of the well 85 liters.

APPROVAL:

EVO900 Electric Bratt Pan 100lt with Duomat bottom, auto tilting
Modular Cooking Range Line

Optional Accessories

• Flanged feet kit	PNC 206136 ❑
• Frontal kicking strip for concrete installation, 1000 mm	PNC 206150 ❑
• Frontal kicking strip for concrete installation, 1200 mm	PNC 206151 ❑
• Frontal kicking strip for concrete installation, 1600 mm	PNC 206152 ❑
• Frontal kicking strip, 1000 mm	PNC 206177 ❑
• Frontal kicking strip, 1200 mm	PNC 206178 ❑
• Frontal kicking strip, 1600 mm	PNC 206179 ❑
• Pair of side kicking strips	PNC 206180 ❑
• 2 panels for service duct (single installation)	PNC 206181 ❑
• 2 panels for service duct (back to back installation)	PNC 206202 ❑
• 4 feet for concrete installation (not for 900 line freestanding grill)	PNC 206210 ❑
• Chimney upstand, 1000 mm	PNC 206305 ❑
• Rear paneling - 1000mm (EVO700/900)	PNC 206375 ❑
• Rear paneling - 1200mm (EVO700/900)	PNC 206376 ❑
• Trolley with lifting and removable tank	PNC 922403 ❑

The company reserves the right to make modifications to the products without prior notice. All information correct at time of printing.

Modular Cooking Range Line
EVO900 Electric Bratt Pan 100lt with Duomat bottom, auto tilting

Front

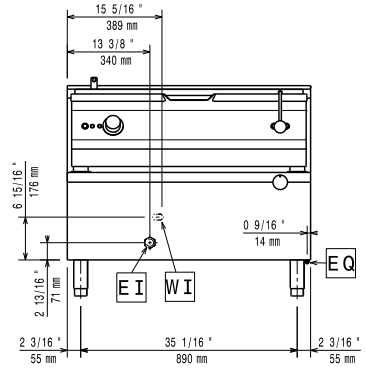

Side

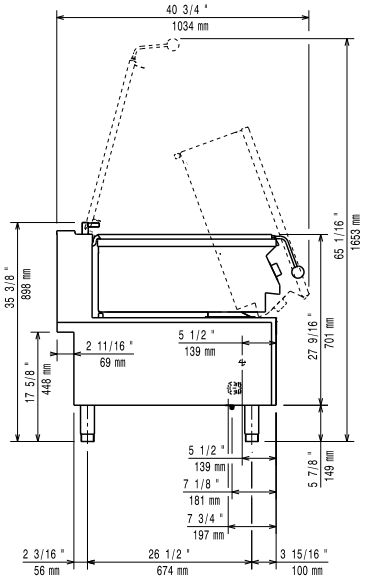

CWI1 = Cold Water inlet 1
EI = Electrical inlet (power)

Top

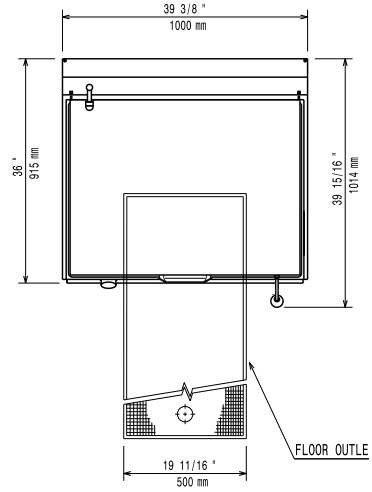

Electric

Supply voltage:	
392421 (Z9BREJDPFM)	380-400 V/3N ph/50/60 Hz
Total Watts:	17 kW
Predisposed for:	380-400V 3N~ 50/60Hz 15.3-17kW

Key Information:

Cooking Surface Depth:	565 mm
Cooking Surface Width:	880 mm
Cooking Well Height:	130 mm
Well Capacity, Max:	100 lt
Working Temperature MIN:	120 °C
Working Temperature MAX:	300 °C
Net weight:	180 kg
Shipping weight:	200 kg
Shipping height:	1040 mm
Shipping width:	1020 mm
Shipping depth:	1100 mm
Shipping volume:	1.17 m³

No clearance needed on rear sides of unit if wall is of non combustible type. If wall is combustible, minimum 50 mm wall clearance should be maintained.

The company reserves the right to make modifications to the products without prior notice. All information correct at time of printing.

2020.02.14