Please read and save this Repair Parts Manual. Read this manual and the General Operating Instructions carefully before attempting to assemble, install, operate or maintain the product described. Protect yourself and others by observing all safety information. The Safety Instructions are contained in the General Operating Instructions. Failure to comply with the safety instructions accompanying this product could result in personal injury and/or property damage! Retain instructions for future reference. AMT reserves the right to discontinue any model or change specifications at any time without incurring any obligation.

©2022 AMT Pump Company, A Subsidiary of The Gorman-Rupp Company, All Rights Reserved.

Periodic maintenance and inspection is required on all pumps to ensure proper operation. Unit must be clear of debris and sediment. Inspect for leaks and loose bolts. Failure to do so voids warranty.

IPT Series 2P5X, 2P5XC, 2S5X, 2S5XC & 3S5X Pumps

Refer to pump manual 1808-633-00 for General Operating and Safety Instructions.

DESCRIPTION

IPT engine driven pumps are commercial duty, centrifugal, self-priming (to 25 ft. vertical lift after initially filling casing with liquid), portable units. Pumps are equipped with industry standard mechanical shaft seals. Iron suction and discharge manifolds are standard male NPT threads for direct connection to swivel hose fitting with gasket, or standard NPT pipe fittings. Discharge manifold can be rotated 180˚ (in 90˚ increments); left side discharge, front discharge or right side discharge. Pump components will handle liquids with a temperature range of 40˚ to 180˚F (4˚ to 82˚ C). Pump only nonflammable liquids compatible with pump component materials. Standard pumps are close coupled to internal combustion engines manufactured by Honda, LCT, & Hatz; AMT specification engines and others. All engines meet current EPA emissions requirements. Pumps (70cc and larger) are preempted from emissions regulation in California. Bearing housing/pedestal drive pumps are also available for direct or drive belt connection.

SPECIFICATIONS

Standard units are constructed of cast aluminum with cast iron impeller (“P” series - cast aluminum), cast iron volute, and cast iron suction and discharge manifolds. Standard seals are EPDM with silicon-carbide (“P” series – carbon-ceramic) wear faces.

UNPACKING

1. Remove pump from packaging materials.
2. Package should include: pump/engine mounted in roll frame, strainer, general/safety manual, specification/parts manual, engine manual. Pump kits: Pump end, general safety manual, and specification/parts manual.
3. Make sure all components are accounted for before discarding packaging material.
4. Inspect all components for damage.
5. No assembly is required for standard engine driven pumps. Pump kits must be constructed on appropriate engine.

PREPARING UNIT FOR OPERATION

Placing Pump

1. Always place the pump as close to the liquid source as possible. Priming efficiency and pump output will be reduced if a long (>25 ft.) suction line is used. Keep all lines as short and straight as possible. Avoid any sharp bends. Suction line cannot have loops or high spots, hose must have a gradual slope up to pump.
2. Pump/engine must be located on a solid level surface.

Connecting Hose or Piping

1. All suction hose/piping connection must be air tight. Pump will not prime if there are any air leaks in the suction line or connections.
2. Use only non-collapsible hose or pipe on the suction. If collapsible hose is used on the discharge, the end of discharge line is submerged in liquid, or a check valve is placed in the discharge line, a means of venting air out of the pump during the priming cycle must be employed.
3. Always use a suction strainer to keep large debris out of the pump. Position strainer well below liquid surface and on a bed of rocks or other suitable surface. If possible tie strainer up so it is suspended off pit bottom. As a last resort tie the strainer in a large submerged bucket if bottom of water source is too soft or muddy.

Before Starting Engine

1. Fill engine crankcase with oil. Follow engine manufacturer recommendations for service classification and viscosity of oil as detailed in engine manual.
2. Fill fuel tank with clean, fresh, fuel. Follow engine manufacturer’s guidelines as listed in engine manual.
3. Always fill pump with liquid through the priming port located on top of the discharge manifold or pump casing before starting engine. Remember the pump is self-priming only when the pump is filled with liquid.

Operation

1. Make certain pump is filled with liquid before starting engine. Failure to do so will result in damage to the mechanical shaft seal. Never run pump dry.

⚠WARNING

DO NOT USE PUMP IN EXPLOSIVE ATMOSPHERE. DO NOT PUMP VOLATILE OR FLAMMABLE LIQUIDS.

2. Follow engine manufacturer’s starting procedure. Run engine at full speed during priming. After pump has primed speed may be reduced to regulate pump output.
3. Pump will self-prime to a vertical height of 10’ in less than one minute, 20’ in 2 minutes, 25’ may take up to 4 minutes. If pump doesn’t prime: Check for air leaks, move pump closer to liquid, shorten suction line, remove loops and high spots from suction line, refill pump with liquid, see troubleshooting guide in this manual.
4. Always allow engine to cool before refueling.

After Pump is Shut Down

1. Always flush the pump out at the end of operation if the liquid being pumped may leave a solid or sticky residue inside of pump, or if a buildup of sediment inside the pump is expected.
2. Always drain pump completely of liquid if there is a chance of freezing.

IPT Series 2P5X, 2P5XC, 2S5X, 2S5XC & 3S5X Pumps

Storing Pump

1. When pump is out of service for an extended period of time, completely drain liquid from casing, store pump in a dry, protected, well-ventilated area.
2. Add fuel stabilizer to engine fuel tank or drain fuel from tank. Turn fuel tank valve to off position.

COMPLETE PUMP ASSEMBLY PROCEDURE

Reference Repair/Replacement Part Exploded View and Lists

NOTE: Do not use petroleum based lubricants with EPDM rubber seal parts and O-rings. Petroleum based products will damage EPDM components.

NOTE: Apply a small amount of anti-seize lubricant to bore, threaded or keyed, in impeller. If petroleum based anti-seize lubricant is used do not allow it to contact EPDM components.

Install Seal Stationary Half

1. Lay bracket (Ref. No. 2) on a solid surface, engine mount down. Apply silicone sealant (Loctite® RTV or similar) to outside metal case of shaft seal stationary half (Ref. No. 8). Position in cast bore of the bracket with polished seal ring up. Install by pressing on metal housing of the seal with a piece of plastic pipe or similar stock until metal case lip seats against bracket. Do not press on lapped seal surface to install.

Install Shaft Collar - 5/8-18 threaded "P" & "S" pumps and kits:

1. Install shaft collar (Ref. No. 10) on PTO shaft. Orient large inside diameter chamfer towards PTO shaft shoulder. Slide collar down shaft until it contacts PTO shaft shoulder.

Install Bracket

1. Lay engine (Ref. No. 1) down on recoil starter with PTO shaft up vertical. Clean PTO shaft and mounting surface.
2. Install adapter gasket (Ref. No. 37) onto the PTO shaft.
3. Position bracket on engine. Fit locating diameter on back of bracket into PTO bearing bore in engine crankcase cover. Make sure all four bolt bosses on bracket sit flat on engine crankcase cover. Rotate until bracket feet align with engine block mounting base.
4. Install four O-rings (Ref. No. 7) on four screws (Ref. No. 6). Install screws through bracket into engine crankcase cover making sure O-rings seat in cast counter bore of bolt hole. Torque screws to 140 in-lb.

Install Closed Impeller -5/8"-18 threaded "P" pumps

1. Install shaft sleeve (Ref. No. 9) on PTO shaft, slide down until it contacts shaft collar.
2. Install shaft seal rotating half (Ref. No. 8) into bore in impeller (Ref. No. 11) hub. Lubricate rubber cup of the seal with soapy water. Position in impeller hub bore with polished face out. Protect polished face of the seal from damage with a piece of cardboard or cloth. Press seal into bore until it bottoms.
3. Thread impeller onto PTO shaft until it bottoms against shaft sleeve. If impeller back shroud hits inside of bracket before contacting shaft sleeve, install shims (Ref. No. 12) between shaft sleeve and shaft collar until clearance between impeller and bracket to 0.60" is achieved.

Install Closed Impeller -3/4"-16 threaded "P" pump kits

1. Install shaft seal rotating half (Ref. No. 8) into bore in impeller (Ref. No. 11) hub. Lubricate seal's rubber cup with soapy water. Position in impeller hub bore with polished face out. Protect seal's polished face from damage with a piece of cardboard or cloth. Press seal into bore until it bottoms.
2. Thread impeller onto PTO shaft until it bottoms against bottom of bore in impeller. If impeller back shroud hits inside of bracket before contacting end of PTO shaft, install shims (Ref. No. 12) between impeller and end of PTO shaft until 0.60" clearance between impeller and bracket is achieved.

NOTE: The .060 clearance is critical to prevent interference of the impeller hitting the bracket potentially caising the pump to seize.

Install Closed Impeller -3/4" keyed "P" pump kits

1. Temporarily install impeller (Ref. No. 11) on PTO shaft. If impeller hits inside of bracket before bottoming against PTO shaft end insert shims (Ref. No. 12) between end of PTO shaft and impeller until 0.60" clearance is achieved. Remove impeller from PTO shaft.

NOTE: The .060 clearance is critical tp prevent intyerference of the impeller hitting the bracket potentially caising the pump to seize.

2. Insert key (Ref. No. 14) into impeller keyway.
3. Install shaft seal rotating half (Ref. No. 8) into bore in impeller hub. Lubricate rubber cup of the seal with soapy water. Position in impeller hub bore with polished face out. Protect polished face of the seal from damage with a piece of cardboard or cloth. Press seal into bore until it bottoms.
4. Install O-ring (Ref. No. 16) into bore in front of impeller nose. Slide impeller screw (Ref. No. 15) into through hole. If required install shims inside impeller bore, position on exposed screw end.
5. Align key with PTO shaft keyway. Slide impeller onto PTO shaft. Fix on shaft with screw. Torque screw to 140 in-lb.

Install Semi-Open Impeller -5/8"-18 threaded "S" pumps and kits

1. Install shaft sleeve (Ref. No. 9) on PTO shaft, slide down until it contacts shaft collar.
2. Install shaft seal rotating half (Ref. No. 8) into bore in impeller hub. Lubricate rubber cup of the seal with soapy water. Position in impeller hub bore with polished face out. Protect polished face of the seal from damage with a piece of cardboard or cloth. Press seal into bore until it bottoms.
3. Thread impeller onto PTO shaft until impeller bottoms against end of shaft sleeve. If impeller rear shroud contacts bracket first remove impeller. Add impeller shims (Ref. No. 13) between shaft sleeve and shaft collar until impeller seats against shaft sleeve before striking bracket.
4. Measure normal distance from impeller vane front face to bracket inside face with a micrometer or similar accurate measuring instrument.
5. Lay volute (Ref. No. 18) on its nose exposing bracket mounting surface. Measure normal distance from volute mounting surface to impeller wear face.
6. Adjust amount of impeller shims between shaft sleeve and shaft collar until assembled clearance between impeller face and volute face is 0.01" to 0.03".

Install Semi-Open Impeller -3/4"-16 threaded "S" pump kits

1. Install impeller spacer (Ref. No. 12) into impeller (Ref. No. 11) threaded bore. Make certain spacer slides all the way to the bottom of the bore.

IPT Series 2P5X, 2P5XC, 2S5X, 2S5XC & 3S5X Pumps

2. Install shaft seal rotating half (Ref. No. 8) into bore in impeller hub. Lubricate rubber cup of the seal with soapy water. Position in impeller hub bore with polished face out. Protect polished face of the seal from damage with a piece of cardboard or cloth. Press seal into bore until it bottoms.
3. Thread impeller onto PTO shaft until impeller spacer bottoms against end of shaft. If impeller rear shroud contacts bracket first remove impeller. Add impeller shims (Ref. No. 12) until shaft seats against shims before striking bracket.
4. Measure normal distance from impeller vane front face to bracket inside face with a micrometer or similar accurate measuring instrument.
5. Lay volute (Ref. No. 18) on its nose exposing bracket mounting surface. Measure normal distance from volute mounting surface to impeller wear face.
6. Adjust amount of impeller shims until assembled clearance between impeller face and volute face is 0.01" to 0.03".

Install Semi-Open Impeller -3/4" keyed "S" pump kits

1. Temporarily install impeller (Ref. No. 11) on PTO shaft. End of PTO shaft must contact bottom of shaft bore in impeller hub. If impeller rear shroud contacts bracket before end of PTO shaft contacts bottom of shaft bore in impeller, install shims (Ref. No. 12) in bore until impeller clears bracket.
2. Measure normal distance from impeller vane front face to bracket inside face with a micrometer or similar accurate measuring instrument.
3. Lay volute (Ref. No. 18) on its nose exposing bracket mounting surface. Measure normal distance from volute mounting surface to impeller wear face.
4. Adjust amount of impeller shims until assembled clearance between impeller face and volute face is 0.01" to 0.03". Remove impeller from shaft.
5. Insert key (Ref. No. 14) into impeller keyway.
6. Install shaft seal rotating half (Ref. No. 8) into bore in impeller hub. Lubricate rubber cup of the seal with soapy water. Position in impeller hub bore with polished face out. Protect polished face of the seal from damage with a piece of cardboard or cloth. Press seal into bore until it bottoms.
7. Install O-ring (Ref. No. 16) into bore in front of impeller nose. Slide impeller screw (Ref. No. 15) into center hole through impeller. If required install shims used to set impeller clearance inside impeller bore, position on exposed screw end.
8. Align key with PTO shaft keyway Slide impeller onto PTO shaft. Fix on shaft with screw. Torque screw to 140 in-lb.

Install Volute

1. Lay volute (Ref. No. 18) on its nose exposing bracket mounting surface. Install O-ring (Ref. No. 17) into groove.
2. Position volute on pins (Ref. No. 5) installed in bracket. Volute will go on only one way, with discharge opening to the top. Slide volute on pins until it seats against bracket.
3. Secure volute to bracket with screws (Ref. No.19). Torque screws to 50 in-lb.

Install Casing

1. Install check valve (Ref. No. 21) on volute nose. Make certain valve is oriented correctly with flapper hinge at the top. Align notch in mounting ring with rib cast into top of volute nose.
2. Install casing O-ring (Ref. No. 20) onto casing (Ref. No. 22). Lubricate with soapy water.
3. Install casing onto bracket. Screws (Ref. No. 27) are held into casing body with O-rings (Ref. No. 28) and square nuts (Ref. No. 4) are held into bracket ears with clips (Ref. No. 3) to make installation easier. Align casing to bracket and install six screws. Torque screws to 100 in-lb.

Install Ports and Plugs

1. Install an O-ring (Ref. No. 30) on each of two plugs (Ref. No. 29). Thread one plug into fill port on discharge manifold (Ref. No. 24) and one plug into casing drain port.
2. Align a gasket (Ref. No. 26) onto discharge flange of casing. Install discharge manifold onto casing with four screws (Ref. No. 25). Torque screws to 100 in-lbs., alternate tightening screws in a cross pattern to eliminate crushing the gasket.
3. Align a gasket (Ref. No. 26) onto suction flange of casing. Install suction flange (Ref. No. 23) onto casing with four screws (Ref. No. 25). Torque screws to 100 in-lbs., alternate tightening screws in a cross pattern to eliminate crushing the gasket.

REPAIR AND MAINTENANCE INSTRUCTIONS

Shaft Seal Replacement

1. Loosen six screws (Ref. No. 27) until screw disengages square nut (Ref. No. 4) in bracket.
2. Remove casing assembly from bracket.
3. Remove screws (Ref. No. 19) holding volute (Ref. No. 18) to bracket.
4. Remove volute.
5. Remove impeller (Ref. No. 11). Threaded impellers unthread counterclockwise (looking at impeller). Keyed shaft impellers; remove impeller screw (Ref. No. 15), inspect O-ring (Ref. No. 16) replace if required.
6. Pry worn rotating half of shaft seal (Ref. No. 8) from impeller hub. Discard seal.
7. Remove screws (Ref. No. 6) holding bracket to engine, inspect O-rings (Ref. No. 7), replace if required.
8. Remove bracket from engine.
9. Press stationary half of shaft seal (Ref. No. 8) from bracket. Discard seal.
10. Replace any O-rings (Ref. Nos. 17 & 20) that show signs of wear or damage.
11. Rebuild pump with new shaft seal. Follow Pump End Assembly Instructions.

Cleaning Pump

1. Loosen six screws (Ref. No. 27) until screw disengages square nut (Ref. No. 4) in bracket.
2. Remove casing assembly from bracket.
3. Remove screws (Ref. No.19) holding volute (Ref. No. 18) to bracket.
4. Remove volute.
5. Clean debris and sediment from inside of casing, volute, and impeller. Clean all volute passages and impeller vanes. Make sure closed impeller vane passages are clean by running a wire from impeller outside diameter to impeller eye. Remove any foreign objects clogging passages.
6. Check all parts for excessive wear or damage. Replace parts as required.
7. Reassemble pump.

IPT Series 2P5X, 2P5XC, 2S5X, 2S5XC & 3S5X Pumps

Periodic Maintenance

1. Clean outside of pump and engine to remove accumulated dirt, oil and grime.
2. Maintain engine according to engine manufacturer's recommendations.
3. It is recommended that a replacement shaft seal and seal kit be kept on hand at all times.
4. Check for leaks during pump operation. Leaks may occur at shaft seal, casing to bracket connection, suction and discharge manifold connections, and through pump casing and bracket. Investigate and repair any leaks immediately.

NOTE: Engine failure due to water intrusion into crankcase caused by a leaking seal will not be covered by engine or pump warranty.

5. Mechanical shaft seals are a wear item and require periodic replacement. Seal life is dependent on many factors including liquid pumped, sediment type, operating point, and suction conditions.
6. Inspect for loose fasteners. Tighten any loose fasteners immediately.

BEARING HOUSING REPLACEMENT FOR PEDESTAL MODELS

1. Remove the front pump assembly as described under Shaft Seal Replacement.
2. Disassemble the pedestal drive kit (Ref. No. 37) from pump adapter by removing the four screws and O-rings.
3. Remove pedestal drive kit (Ref. No. 37) and replace entire unit as recommended by factory to insure proper operation.
4. Reverse steps 1 thru 3 to reassemble pump.

IMPORTANT: After pump is assembled, it is necessary to rotate pump shaft by hand to check for striking of the impeller. If striking or rubbing occurs, adjust impeller shims as required (See Shim Adjustment).

IPT Series 2P5X, 2P5XC, 2S5X, 2S5XC & 3S5X Pumps

Problem	Possible Cause(s)	Corrective Action
Pump fails to prime	1 Pump not filled with liquid	1 Add liquid to pump through priming port
	2 Air leak at suction line connection	2 Add sealant to connection
	3 Worn suction connection gasket	3 Replace suction gasket
	4 Leaking suction line	4 Inspect, repair or replace suction line
	5 Engine speed too low	5 Run engine at maximum speed
	6 Worn or broken volute or impeller	6 Replace parts as required
	7 Leaking/worn mechanical shaft seal	7 Replace mechanical shaft seal
	8 Clogged suction strainer/line	8 Clean strainer and suction line
	9 Suction lift too great (25 ft. max)	9 Reduce lift
	10 Suction line too long	10 Reduce length to under 30 feet
	11 Pump is air locked	11 Vent pump discharge through priming port
Priming remedies that will NOT work: 1. Holding suction line out of liquid source and forcing liquid into end while pump is running 2. Pinching off the discharge line to “build up pressure”. 3. Holding hand against end of suction line or pump suction port to “feel” for suction. Follow above priming troubleshooting guide. If pump still will not prime after all corrective action is exhausted, check pump priming capacity by: 1. Install a vacuum gauge on capped suction port. Gauge to suction port connection must be 100% air tight. 2. Fill pump casing completely with water. 3. Run pump at full speed, some water will be thrown out of discharge. 4. Vacuum gauge should register 18-22 inches of mercury within a minute or so. a. If vacuum registers below 18 in of hg check gauge to pump connection for air leaks, inspect/replace volute, impeller and shaft seal as required. b. If vacuum gauge value is within range pump is working correctly. The problem is not the pump.		
Reduced capacity or discharge pressure	1. Clogged strainer or lines	1. Clean strainer, suction and discharge lines
	2. High friction loss in line	2. Remove kinks and elbows, reduce length
	3. Discharge head too high	3. Lower end of discharge line, remove nozzles
	4. Engine speed too low	4. Increase engine speed
	5. Drop in engine output	5. Repair engine
	6. Clogged impeller	6. Remove clog
	7. Worn/damaged impeller or volute	7. Replace parts as required
Pump will not work/engine will not turn over	1. Clogged pump	1. Remove clog between impeller and volute
	2. Pump parts rusted together	2. Disassemble pump, free parts
	3. Damaged impeller or volute	3. Replace volute or impeller
	4. Engine seized	4. Remove pump from engine, check engine itself
Pump will not work/engine runs	1. Impeller stripped/key sheared	1. Disassemble pump, replace parts/engine
	2. Pump impeller/volute clogged	2. Clean pump
	3. Will not prime	3. See Priming Troubleshooting Section
	4. Insufficient liquid supply	4. Increase liquid supply

IPT Series 2P5X, 2P5XC, 2S5X, 2S5XC & 3S5X Pumps

For Repair Parts contact dealer where pump was purchased.

Please provide following information:
-Model Number
-Serial Number (if any)

Part description and number as shown in parts list

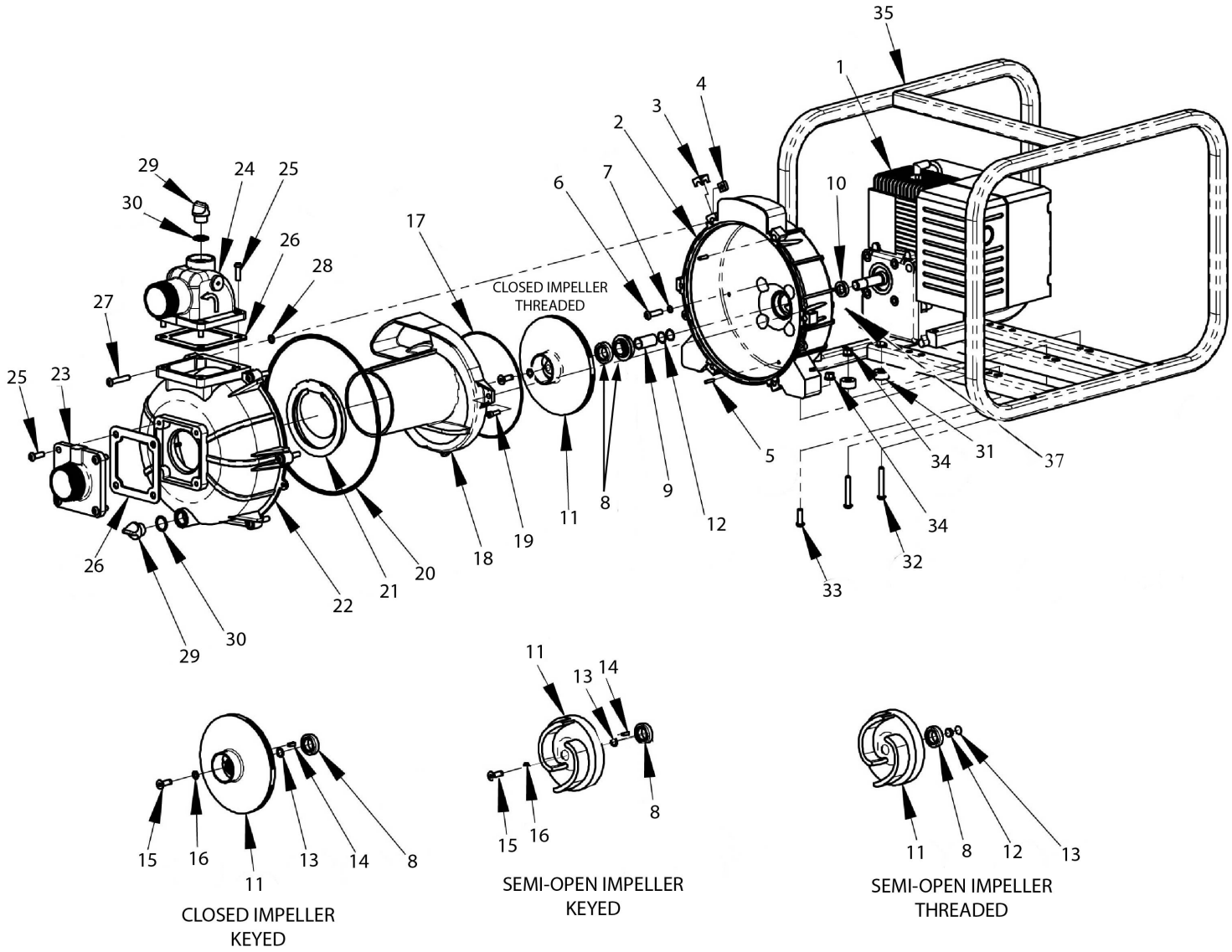

Figure 1 - Repair Parts Illustrations

Repair Parts List

Ref. No.	Description	2" Hi Pressure 2P5X (Threaded Shaft)	2" Hi Pressure 2P5XK (Keyed Shaft)	2" Trash 2P5XC (Threaded Shaft)	2" Trash 2S5X (Threaded Shaft)	2" Trash 2S5XK (Keyed Shaft)	2" Trash 2S5XC (Threaded Shaft)	3" Trash 3S5X (Threaded Shaft)	3" Trash 3S5XK (Keyed Shaft)	Qty. Req'd
1	Engine	See table	See table	See table	See table	See table	See table	See table	See table	1
2	Adapter Kit (Gasoline Engines)	3S5X-035-96	3S5X-035-96	3S5X-035-95	3S5X-035-96	3S5X-035-96	3S5X-035-95	3S5X-035-96	3S5X-035-96	1
	(includes Ref. Nos. 2, 3, 4 & 5)									
	Adapter Kit (Diesel Engines)	3S5X-036-96	3S5X-036-96	3S5X-036-95	3S5X-036-96	3S5X-036-96	3S5X-036-95	3S5X-036-96	3S5X-036-96	1
	(includes Ref. Nos. 2, 3, 4 & 5)									
3	Keeper clip	Incl. w/Ref 2	Incl. w/Ref 2	Incl. w/Ref 2	Incl. w/Ref 2	Incl. w/Ref 2	Incl. w/Ref 2	Incl. w/Ref 2	Incl. w/Ref 2	6
4	5/16-18 Square Nut	Incl. w/Ref 2	Incl. w/Ref 2	Incl. w/Ref 2	Incl. w/Ref 2	Incl. w/Ref 2	Incl. w/Ref 2	Incl. w/Ref 2	Incl. w/Ref 2	6
5	3/16x3/4" Slotted Spring Pin	Incl. w/Ref 2	Incl. w/Ref 2	Incl. w/Ref 2	Incl. w/Ref 2	Incl. w/Ref 2	Incl. w/Ref 2	Incl. w/Ref 2	Incl. w/Ref 2	2
6	5/16-24 Screw	Incl. w/Ref 2	Incl. w/Ref 2	Incl. w/Ref 2	Incl. w/Ref 2	Incl. w/Ref 2	Incl. w/Ref 2	Incl. w/Ref 2	Incl. w/Ref 2	4
7	#011 O-Ring	Incl. w/Ref 36	Incl. w/Ref 36	Incl. w/Ref 36	Incl. w/Ref 36	Incl. w/Ref 36	Incl. w/Ref 36	Incl. w/Ref 36	Incl. w/Ref 36	4
8	Seal Assembly-EPDM	1640-162-93	1640-162-93	1640-162-93	N/A	N/A	N/A	N/A	N/A	1
	Seal Assembly- Silicon Carbide/ Viton	Optional 3-258-A	Optional 3-258-A	Optional 3-258-A	3-258-A	3-258-A	3-258-A	3-258-A	3-258-A	1
9	Shaft Sleeve/Collar Kit	2P5X-140-90	N/A	2P5X-140-90	2S5X-140-90	N/A	2S5X-140-90	2S5X-140-90	N/A	1
		& Incl. w/Ref 11		& Incl. w/Ref 11	& Incl. w/Ref 11		& Incl. w/Ref 11	& Incl. w/Ref 11		
10	Shaft Collar	Incl. w/Ref 9 & 11	N/A	Incl. w/Ref 9 & 11	Incl. w/Ref 9 & 11	N/A	Incl. w/Ref 9 & 11	Incl. w/Ref 9 & 11	N/A	1
11	Impeller Kit (5/8)	2P5X-010-96	N/A	2P5X-010-97	2S5T-010-95	N/A	2S5T-010-95	3S5X-010-95	N/A	1
	(includes Ref. Nos. 9, 10,11,12,13,14,15 (if required))									
	Impeller Kit (3/4)	2P5T-010-96	Discontinued	N/A	2S5X-010-95	2S5K-010-95	2S5X-010-95	N/A	3S5K-010-95	1
	(includes Ref. Nos. 9, 10,11,12,13,14,15 (if required))									
12	Impeller Spacer	N/A	N/A	N/A	Incl. w/Ref 11	N/A	Incl. w/Ref 11	Incl. w/Ref 11	N/A	1
13	Impeller Shim (if required)	Incl. w/Ref 11	Incl. w/Ref 11	Incl. w/Ref 11	Incl. w/Ref 11	Incl. w/Ref 11	Incl. w/Ref 11	Incl. w/Ref 11	Incl. w/Ref 11	1
14	3/16 square x 1/2" long Key	N/A	Incl. w/Ref 11	N/A	N/A	Incl. w/Ref 11	N/A	N/A	Incl. w/Ref 11	1
15	5/16-24 Flat Head Screw	N/A	Incl. w/Ref 11	N/A	N/A	Incl. w/Ref 11	N/A	N/A	Incl. w/Ref 11	1
16	#109 O-Ring	N/A	Incl. w/Ref 36	N/A	N/A	Incl. w/Ref 36	N/A	N/A	Incl. w/Ref 36	1
17	#167 O-Ring ("P" Series)	Incl. w/Ref 36	Incl. w/Ref 36	Incl. w/Ref 36	N/A	N/A	N/A	N/A	N/A	1
	#160 O-Ring ("S" Series)	N/A	N/A	N/A	Incl. w/Ref 36	Incl. w/Ref 36	Incl. w/Ref 36	Incl. w/Ref 36	Incl. w/Ref 36	1
18	Volute Kit	2P5X-150-95	2P5X-150-95	2P5X-150-95	2S5X-150-95	2S5X-150-95	2S5X-150-95	3S5X-150-95	3S5X-150-95	1
	(includes Ref. Nos. 18 & 19)									
19	1/4-20 Cap Screw	Incl. w/Ref 18	Incl. w/Ref 18	Incl. w/Ref 18	Incl. w/Ref 18	Incl. w/Ref 18	Incl. w/Ref 18	Incl. w/Ref 18	Incl. w/Ref 18	2
20	#378 O-Ring	Incl. w/Ref 36	Incl. w/Ref 36	Incl. w/Ref 36	Incl. w/Ref 36	Incl. w/Ref 36	Incl. w/Ref 36	Incl. w/Ref 36	Incl. w/Ref 36	1
21	Check Valve	7-137-1	7-137-1	7-137-1	7-137-1	7-137-1	7-137-1	7-137-1	7-137-1	1
		& Incl. w/Ref 36	& Incl. w/Ref 36	& Incl. w/Ref 36	& Incl. w/Ref 36	& Incl. w/Ref 36	& Incl. w/Ref 36	& Incl. w/Ref 36	& Incl. w/Ref 36	
22	Casing Kit	3S5X-005-96	3S5X-005-96	3S5X-005-95	3S5X-005-96	3S5X-005-96	3S5X-005-95	3S5X-005-96	3S5X-005-96	1
	(includes Ref. Nos. 22, 27 & 28)									
23	Suction Flange Kit	2S5X-050-95	2S5X-050-95	2S5X-050-95	2S5X-050-95	2S5X-050-95	2S5X-050-95	3S5X-050-95	3S5X-050-95	1
	(includes Ref. Nos. 23 & 25)									
24	Discharge Manifold Kit	2S5X-080-95	2S5X-080-95	2S5X-080-95	2S5X-080-95	2S5X-080-95	2S5X-080-95	3S5X-080-95	3S5X-080-95	1
	(includes Ref. Nos. 24 & 25)									
25	5/16-18 Cap Screw	Incl. w/ Ref 23 & 24	Incl. w/ Ref 23 & 24	Incl. w/ Ref 23 & 24	Incl. w/ Ref 23 & 24	Incl. w/ Ref 23 & 24	Incl. w/ Ref 23 & 24	Incl. w/ Ref 23 & 24	Incl. w/ Ref 23 & 24	8
26	Gasket	Incl. w/Ref 36	Incl. w/Ref 36	Incl. w/Ref 36	Incl. w/Ref 36	Incl. w/Ref 36	Incl. w/Ref 36	Incl. w/Ref 36	Incl. w/Ref 36	2
27	Cap Screw	Incl. w/ Ref 22	Incl. w/ Ref 22	Incl. w/ Ref 22	Incl. w/ Ref 22	Incl. w/ Ref 22	Incl. w/ Ref 22	Incl. w/ Ref 22	Incl. w/ Ref 22	6
28	Bolt Keeper	Incl. w/ Ref 22	Incl. w/ Ref 22	Incl. w/ Ref 22	Incl. w/ Ref 22	Incl. w/ Ref 22	Incl. w/ Ref 22	Incl. w/ Ref 22	Incl. w/ Ref 22	6
29	Fill Plug	Incl. w/Ref 36	Incl. w/Ref 36	Incl. w/Ref 36	Incl. w/Ref 36	Incl. w/Ref 36	Incl. w/Ref 36	Incl. w/Ref 36	Incl. w/Ref 36	2
30	#117 O-Ring	Incl. w/Ref 36	Incl. w/Ref 36	Incl. w/Ref 36	Incl. w/Ref 36	Incl. w/Ref 36	Incl. w/Ref 36	Incl. w/Ref 36	Incl. w/Ref 36	2
31	Spacer	Incl. w/ Ref 35A	Incl. w/ Ref 35A	Incl. w/ Ref 35A	Incl. w/ Ref 35A	Incl. w/ Ref 35A	Incl. w/ Ref 35A	Incl. w/ Ref 35A	Incl. w/ Ref 35A	4 or 2
32	Cap Screw	Incl. w/ Ref 35A	Incl. w/ Ref 35A	Incl. w/ Ref 35A	Incl. w/ Ref 35A	Incl. w/ Ref 35A	Incl. w/ Ref 35A	Incl. w/ Ref 35A	Incl. w/ Ref 35A	4 or 6
33	Cap Screw	Incl. w/ Ref 35A	Incl. w/ Ref 35A	Incl. w/ Ref 35A	Incl. w/ Ref 35A	Incl. w/ Ref 35A	Incl. w/ Ref 35A	Incl. w/ Ref 35A	Incl. w/ Ref 35A	2
34	Hex Flange Nut	Incl. w/ Ref 35A	Incl. w/ Ref 35A	Incl. w/ Ref 35A	Incl. w/ Ref 35A	Incl. w/ Ref 35A	Incl. w/ Ref 35A	Incl. w/ Ref 35A	Incl. w/ Ref 35A	6

Repair Parts List - CONTINUED

Ref. No.	Description	2" Hi Pressure 2P5X (Threaded Shaft)	2" Hi Pressure 2P5XK (Keyed Shaft)	2" Trash 2P5XC (Threaded Shaft)	2" Trash 2S5X (Threaded Shaft)	2" Trash 2S5XK (Keyed Shaft)	2" Trash 2S5XC (Threaded Shaft)	3" Trash 3S5X (Threaded Shaft)	3" Trash 3S5XK (Keyed Shaft)	Qty. Req'd
35	Frame Kit (if required)	3120-IPT-K0	3120-IPT-K0	3120-IPT-K0	3120-IPT-K0	3120-IPT-K0	3120-IPT-K0	3120-IPT-K0	3120-IPT-K0	1
	Frame Kit for Hatz 1B30	1696-100-K0	1696-100-K0	1696-100-K0	1696-100-K0	1696-100-K0	1696-100-K0	1696-100-K0	1696-100-K0	1
35A	Frame Hardware Kit (If required) Gas Engine	3120-105-95	3120-105-95	3120-105-95	3120-105-95	3120-105-95	3120-105-95	3120-105-95	3120-105-95	1
	Frame Hardware Kit (if required) Hatz 1B30 Diesel Engine	C401-100-92	C401-100-92	C401-100-92	C401-100-92	C401-100-92	C401-100-92	C401-100-92	C401-100-92	1
36	EPDM O-Ring/ Check Valve/ Gasket Kit	2PXE-300-90	2PXE-301-90	2PXE-301-90	2SXE-300-90	2SXE-301-90	2SXE-300-90	2SXE-300-90	2SXE-301-90	1
	(includes Ref. Nos. 7, 16, 17, 20, 21, 26, 29 & 30 (if required))									
	Viton (Optional) O-Ring/Check Valve/Gasket Kit	2PXV-300-90	2PXV-301-90	2PXV-301-90	2SXV-300-90	2SXV-301-90	2SXV-300-90	2SXV-300-90	2SXV-301-90	1
	(includes Ref. Nos. 7, 8, 16, 17, 20, 21, 26, 29 & 30 (if required))									
37	Adapter Gasket	Incl. w/Ref 36	Incl. w/Ref 36	Incl. w/Ref 36	Incl. w/Ref 36	Incl. w/Ref 36	Incl. w/Ref 36	Incl. w/Ref 36	Incl. w/Ref 36	1
38	Pedestal Drive Kit (if required) -not shown	2760-090-99	3826-090-90	3826-090-90	2760-090-99	3826-090-90	2760-090-99	2760-090-99	3826-090-90	1

Repair Parts List - Engine

Ref. No.	Engine Description	Model No. Designation	PTO Shaft	Engine Part Number	IPT Model No. Designation		
1	LCT	L	3/4 Keyed	1630-070-00	e.g. 3S5XHR		
	Honda GX160	H	5/8-18 Thrd	1639-036-00	Model/Type	Engine	Added Option
	Honda GX200	H	5/8-18 Thrd	1639-070-00	3S5X	H	R
	Honda GX160	H	3/4 Keyed	1639-017-00	i	i	i
	Hatz 1B30 Diesel	Z	5/8-18 Thrd	1630-035-90	3" Trash	Honda Engine	Roll Cage
	Hatz 1B30 Diesel	Z	3/4 Keyed	1630-037-90	w/ 5/8" Thrd Shaft		
	Models with Hatz 1B30 Diesel Engine will have a 2S7XZR or 3S7XZR Model						

NOTES:

NOTES:

AMT Pump Company
(herein "AMT")
400 Spring Street
Royersford, PA 19468
Phone: (610) 948-3800
Fax: (610) 948-5300
www.amtpump.com

General Information

SALES POLICY: AMT products are sold through our established Distributors. We do not sell direct to the consumer or organization not entitled to trade recognition. Therefore, possession of our catalogs and/or price list(s) does not infer an offer to sell.

MINIMUM ORDER: We appreciate your order, however, all orders are subject to a minimum $35.00 net invoice charge (excluding freight). This applies to all pump and parts purchase orders.

PRICES: Prices are subject to change without notice. All orders accepted are subject to prices in effect at time of shipment.

PAYMENT TERMS: Terms, upon establishment of credit, are Net 30 days. Past due accounts may be subject to a service charge of 1.5% per month. Domestic or assignable letter of credit is required for all export trade.

PAST DUE ACCOUNTS: AMT reserves the right to withhold open account shipments on any past due account. Invoices are considered past due after thirty (30) days. In the interest of sound business, all orders are subject to approval of the Credit Department.

SHIPPING INSTRUCTIONS: All shipments will be made F.O.B. the factory. Where instructions for shipment do not appear on the order, the shipment will be made according to our best judgment. Full risk of loss (including transportation delays and losses) shall pass to the customer upon delivery of the products to the carrier at the F.O.B. point. When loss or delay occurs, primary responsibility for tracing rests with the customer. When there is LOSS or APPARENT VISIBLE DAMAGE to a shipment, when tendered for delivery, *DO NOT* give the carrier a clear receipt. Note such damage on the carrier's delivery receipt and *HAVE THE DRIVER SIGN THE RECEIPT.*

PRODUCT REVISIONS: AMT reserves the right to discontinue, change or improve its products or any portions thereof without being obligated to provide such a change or improvement for units sold and/or shipped prior to such a change or improvement.

LEAD TIME: Products designated "Quick Ship Product", also referred to as "QSP" will normally be shipped within 24 hours of receipt of a non-cancellable purchase order. Only limited quantities of "QSP" pumps are available.

STANDARD LEAD TIME: Lead time is two weeks for all non "QSP" product. AMT reserves the right to revise lead times as required due to availability of materials and all other causes beyond our control.

VIP SHIPMENT: Select AMT and IPT branded pumps are available for next day shipment for non-QSP (Quick Ship Products) items and subjected to a specific model surcharge per unit noted in the respective price book. Requires calling for availability, confirmation and a non-cancellable purchase order or credit card payment prior to shipment. The expedited shipping charges are an additional cost added separately from the VIP charges per item. AMT reserves the right to revise lead times as required due to availability of materials and all other causes beyond our control. QSP quantities are limited as determined by AMT.

ALL purchase orders must be submitted via hard copy sent to AMT customer service department by fax, EDI or e-mail.

RETURN GOODS POLICY: Goods shall not be returned without a return goods authorization number (RGA) issued by AMT customer service. The RGA number must be listed on the packing list. Only current model and part numbers with a valid date code may be returned (within one year from date of purchase). **A 20% restocking and packaging charge will apply to all returns. All shipping charges must be pre-paid. No exceptions.**

ORDER CHANGES BY CUSTOMER: Orders in process may not be changed except with written consent and may be subject to special charges.

12 Month Limited Warranty

EXTENT AND DURATION OF LIMITED WARRANTY

Coverage: AMT Pump Company (herein "AMT") or IPT Pumps by Gorman-Rupp (herein "IPT") or Gorman-Rupp Industries Division of the The Gorman-Rupp Company, Patterson, or the Gorman-Rupp Company (herein referred to as "G-R Unit) each individually warrants that its products and parts shall be free from defects in material and workmanship for twelve (12) months from the date of purchase by the original end user when installation is made and maintenance is performed in accordance with G-R Unit's recommendations. Wear and tear resulting from use and items normally consumed in use are not covered.

EXCEPTIONS

(A) This Limited Warranty shall not apply to mechanical seals in AMT or IPT pumps and the following products and parts: engines, motors, trade accessories and all other products, components, parts and materials not manufactured by the G-R Units. These items may, however, be covered by the warranties of their respective manufacturers. (B) This warranty does not extend to or apply to any unit which has been repaired or altered at any place other than by a G-R Unit, or by persons not expressly approved by a G-R Unit to make repairs or alterations, nor to any unit the serial number, model number or identification of which has been removed, defaced or altered. (C) This warranty does not extend to any product manufactured by a G-R Unit, which has been subjected to mis-use, neglect, accident, improper installation, or use in violation of instructions furnished by a G-R Unit. (D) Pump Kits: This warranty does not extend to any product sold by a G-R Unit unassembled as a Pump Kit. Pump Kits are warranted against defects in material and workmanship for 60 days from the date of shipment from a G-R Unit. Any Pump Kit parts deemed defective by a G-R Unit will be replaced free of charge within 60 days of shipment. Pump Kits are not returnable for credit.

LIMITATIONS

THE G-R UNITS' SOLE AND EXCLUSIVE WARRANTY WITH RESPECT TO THEIR PRODUCTS AND PARTS IS THIS LIMITED WARRANTY. THIS LIMITED WARRANTY IS IN LIEU OF ALL OTHER EXPRESS AND/OR IMPLIED WARRANTIES, INCLUDING IMPLIED WARRANTIES OF MERCHANTABILITY AND FITNESS FOR PARTICULAR PURPOSE.

EXCLUSIVE REMEDY AND DAMAGES

The sole and exclusive remedy for breach of this Warranty by a G-R Unit and the entire extent of its liability for such breach or for damages arising from the use of the products and parts covered under this Limited Warranty, shall be as follows:

1. **Repair or Replacement:** If inspection shows that any G-R Unit product or part covered under this Limited Warranty is defective in materials or workmanship, the G-R Unit shall repair or replace the defective or non-conforming product or part without charge, whichever the G-R Unit chooses. You must have properly maintained and used the product or part claimed to be defective in accordance with the maintenance schedule or manual, which comes with the product. No allowance will be made for labor, installation, removal, transportation or other charges incurred by you in connection with such repair or replacement.
2. To obtain the above remedy:
   - A. Immediately notify the G-R Unit upon discovery of the claimed defect in materials or workmanship and provide the serial number or date code of the product and/or part(s) or provide the G-R Unit with the invoice or bill of sale referencing the product by no later than the expiration date of the warranty period.
   - B. The G-R Unit will advise whether inspection will be necessary and how whether repair or replacement will be made. If inspection by the G-R Unit is necessary, the pump or defective part must be sent freight pre-paid to the G-R Unit. Return shipment will be F.O.B. the G-R Unit's plant.
   - C. **Return Goods Authorization Requirement:** No product will be accepted for return or replacement without the prior written authorization of the G-R Unit. Upon such authorization, and in accordance with instructions from the G-R Unit, the product will be returned to the G-R Unit, shipping charges prepaid by the Buyer.

3. **Damages:** The G-R Unit's liability for damages for breach of this Limited Warranty shall not exceed the amount of the purchase price of the product or part(s) in respect to which Such damages are claimed. **IN NO EVENT SHALL THE G-R UNITS BE LIABLE FOR INCIDENTAL, CONSEQUENTIAL OR SPECIAL DAMAGES FOR BREACH OF THIS LIMITED WARRANTY.**

Some states do not allow the exclusion or limitation of incidental or consequential damages, so the above limitation or exclusion may not apply to you. This Limited Warranty gives you specific legal rights, and you may also have other rights, which vary from state to state.



A Gorman-Rupp Company

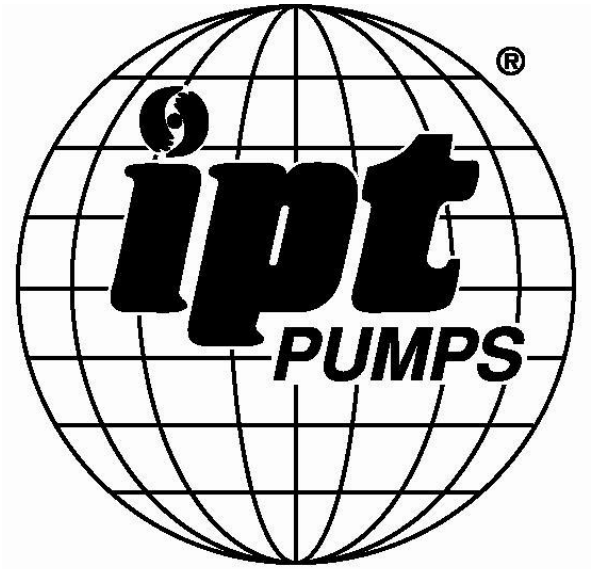

BY

GORMAN-RUPP®

www.amtpump.com