CALL TOLL FREE 877-742-2878 FOR SALES AND SUPPORT

Return to BurtProcess.com

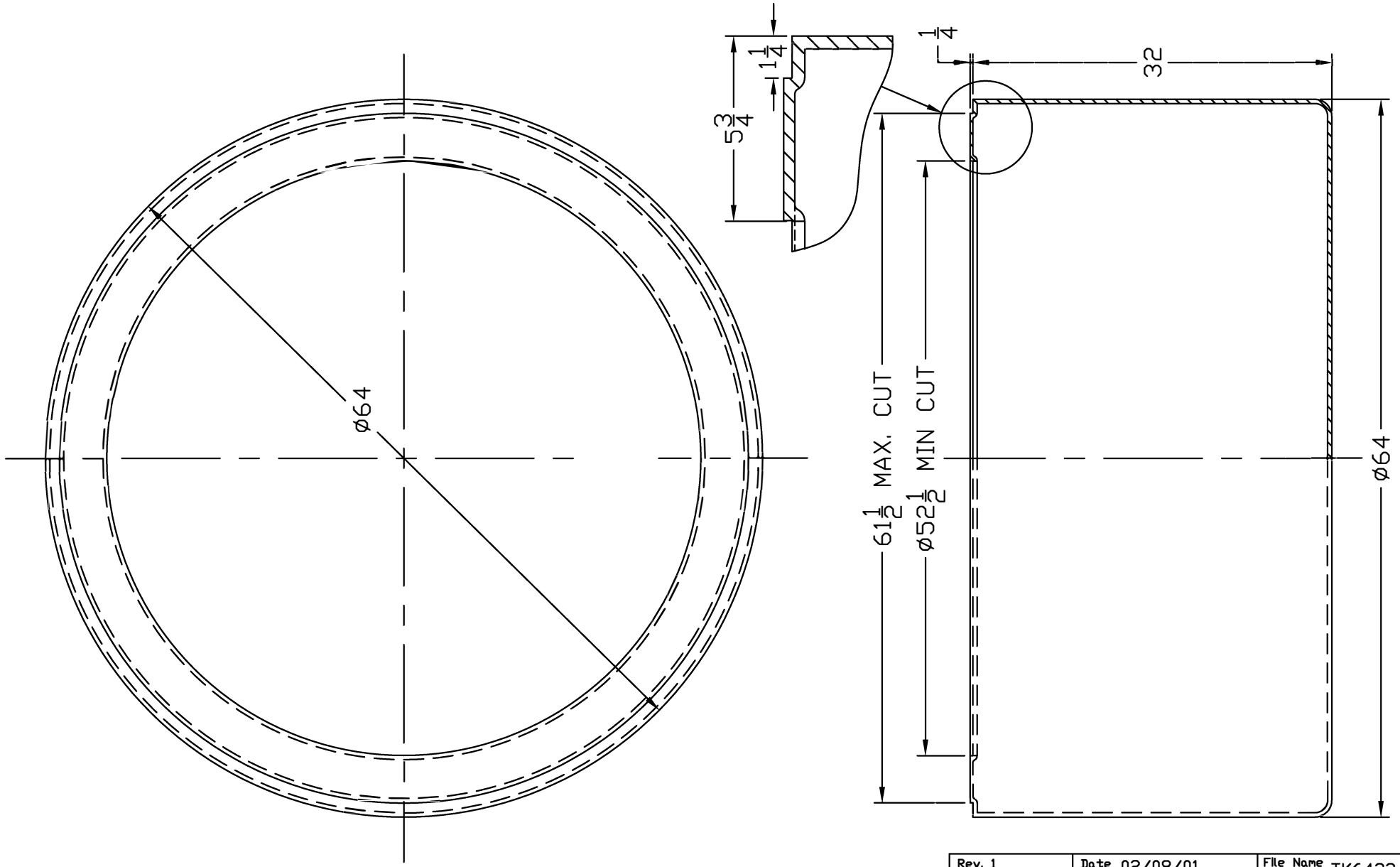

NOMINAL FLANGE IS 2 INCHES

Rev. 1	Date 02/08/01	File Name TK6433-5

CHEM-TAINER Industries Inc.
361 Neptune Ave. W.Babylon, NY 11704
(631) 661-8300 Fax: (631) 661-8209

Date 22/01/01	Mold Location CA
Drawn By: IIA	Cust. Rep.

TITLE
385 GAL. CYLINDRICAL CONTAINMENT BASIN

Part # TC6433□A	Dwg. # TC6433□A-CA

THIS DRAWING & DESIGN IS
THE PROPERTY OF CHEM-TAINER INDUSTRIES INC.
IT MAY NOT BE USED FOR ANY PURPOSE
OTHER THAN BY THE OWNER. CHEM-TAINER DOES NOT
AUTHORIZE THE REPRODUCTION OR CONVEYANCE
OF ANY INFORMATION CONTAINED HEREIN.

ALL DIMENSIONS SHOWN ARE OUTSIDE PART DIMENSIONS IN INCHES,
AND VARY BY THE STANDARD ROTATIONAL MOLDING TOLERANCE OF ±2%.