CALL TOLL FREE 877-742-2878 FOR SALES AND SUPPORT Return to BurtProcess.com



Please read and save this Repair Parts Manual. Read this manual and the General Operating Instructions carefully before attempting to assemble, install, operate or maintain the product described. Protect yourself and others by observing all safety information. The Safety Instructions are contained in the General Operating Instructions. Failure to comply with the safety instructions accompanying this product could result in personal injury and/or property damage! Retain instructions for future reference. AMT reserves the right to discontinue any model or change specifications at any time without incurring any obligation.

©2016 AMT Pump Company, A Subsidiary of The Gorman-Rupp Company, All Rights Reserved.

Periodic maintenance and inspection is required on all pumps to ensure proper operation. Unit must be clear of debris and sediment. Inspect for leaks and loose bolts. Failure to do so voids warranty.

# Sewage/Trash Pumps

Refer to pump manual 1808-634-00 for General Operating and Safety Instructions.

AMT® A Gorman-Rupp Company

## DESCRIPTION

This sewage/trash pump is a heavy duty, centrifugal, motor driven, self-priming (to 20 ft. lift) unit, after initially filling casing with liquid. Pump is equipped with a silicon carbide mechanical seal, cast iron wear surfaces and a stainless steel clog-resistant impeller. Units are used to handle water containing sewage, stones, sticks, mud and other solids: maximum diameter ½ the discharge NPT size. Handle liquids from 40º to 180º F (4º to 82º C) for use with nonflammable fluids compatible with pump component materials. All units come with built-in suction check valve to aid priming efficiency and easily removable casing/clean out cover and volute for quick debris clean out. An NPT threaded seal wash port is provided on Models 393A-95, 393B-95, 394A-95, 394B-95, 394C-95, 394D-95 and 399A-95. Units are powered by totally enclosed fan cooled (TEFC) motors, single or three phase power. Motor includes stainless steel shaft or stainless steel shaft sleeve.

## ⚠WARNING

***Pumps must be operated in specific ranges as noted on respective curves on page 3 (Figure 3). Failure to adhere to curve will result in damage and cavitation to pump thus voiding warranty.***

## UNPACKING

Refer to Repair Parts Illustration and Repair Parts List to aid in identifying parts. Unpack and separate all pump components from container making sure all parts are accounted for.

Package should contain:

1. Pump and motor completely assembled.
2. Suction strainer.
3. Specifications Information & Repair Parts Manual.
4. General Operating Instructions & Maintenance Manual.

## MAINTENANCE

**Note:** For information pertaining to the motor and motor parts, consult the motor manual or contact the nearest authorized service representative or the manufacturer.

## ⚠WARNING

***Make certain that the unit is disconnected from the power source before attempting to service or remove any component.***

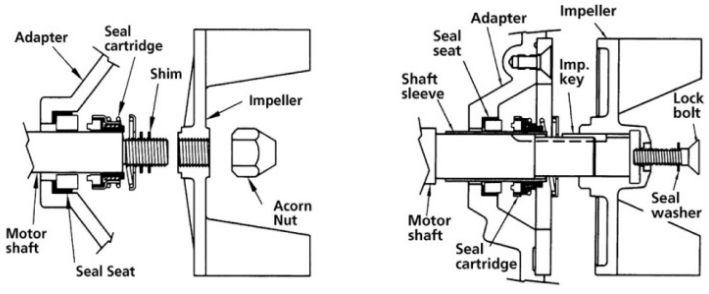


Figure 1 & 2 - Mechanical Seal Replacement

## MECHANICAL SEAL REPLACEMENT

Should the mechanical seal, which consists of seal seat (Ref. No. 6), seal cartridge (Ref. No. 5), and shaft sleeve (Ref. No. 19, if applicable) require replacement, proceed as follows and refer to Figures 1 and 2. The seal should also be replaced if the adapter (Ref. No. 8) is to be replaced.

**NOTE:** Always replace the seal seat, seal cartridge, and shaft sleeve to ensure proper mating of mechanical seal components!

1. Unthread bolts (Ref. No. 9) and remove casing (Ref. No. 1) from adapter.
2. Unthread screw(s) (Ref. No. 11) and remove volute from adapter.
3. 316A-95 and 316B-95 (Figure 1): Remove impeller lock nut (Ref. No. 18). Unscrew impeller (Ref. No. 3) from the motor shaft. Use a rubber mallet or soft block of wood to loosen impeller. Turn it counterclockwise. Remove the impeller shim (Ref. No. 4) and seal cartridge (Ref. No. 5).
4. 393A-95, 393B-95, 394A-95, 394B-95, 394C-95, 394D-95, and 399A-95 (Figure 2): Using an Allen wrench, remove the impeller lock bolt (Ref. No. 18) and o-ring (Ref. No. 25). Slide impeller off motor shaft. Remove the impeller shim (Ref. No. 4), shaft sleeve (Ref. No. 19) and seal cartridge (Ref. No. 5).

**IMPORTANT:** Care should be taken to ensure that the same number of impeller shims (Ref. No. 4) are replaced behind the impeller as were removed. These impeller shims are located directly behind impeller. These shims as well as the impeller key (Ref. No. 21) become loose as the impeller is removed.

5. Unthread cap screws (Ref. No. 13) and remove adapter from motor.
6. Push seal seat (Ref. No. 6) from the adapter recess with a screwdriver.
7. Clean adapter recess before inserting a new seal seat.

## ⚠ CAUTION

***The precision lapped faces on the mechanical seal are easily damaged. Handle your replacement seal carefully.***

8. Carefully wipe the polished surface of the new seal seat with a clean cloth.
9. Wet rubber portion of the seal seat with a light coating of soapy water.
10. While wearing clean gloves or using a clean rag, press seal seat squarely into adapter recess. Avoid scratching the polished surface. If seal seat will not position properly, place a cardboard washer over the polished surface and use a piece of pipe to press in, firmly but gently.
11. After seal seat is in place, dispose of cardboard washer. Check that seat is clean and has not been marred.
12. Using a clean cloth, wipe the shaft and make certain that it is perfectly clean.
13. Secure the adapter on the motor mounting surface with fasteners.

# Sewage/Trash Pumps

14. Wet the inside rubber portion of the new seal cartridge with a light coating of soapy water. 316A-95 and 316B-95: Slide cartridge onto motor shaft until cartridge meets seal seat. 393A-95, 393B-95, 394A-95, 394B-95, 394C-95, 394D-95 and 399A-95: Slide cartridge onto shaft sleeve. Slide shaft sleeve with seal cartridge onto motor shaft until cartridge meets seal seat. Reinstall impeller key.

I**MPORTANT:** Before installing new shaft sleeve, apply a bead of non-hardening, pliable sealant (such as Permatex® Form-A-Gasket® No. 2) to motor shaft shoulder.

15. Reinstall any impeller shims that have been removed. (See “Shim Adjustment” section).
16. 316A-95 and 316B-95: Screw impeller back in place, tightening until it is seated against shims and shaft shoulder. 393A-95, 393B-95, 394A-95, 394B-95, 394C-95, 394D-95 and 399A-95: Replace impeller key, impeller, o-ring and impeller lock bolt. Tighten lock bolt until impeller is seated against shims and shaft sleeve.
17. Remount volute with fasteners.
18. Refer to section entitled Shim Adjustment at this time if shaft sleeve or any other parts listed have been replaced.
19. Inspect position of flapper valve to ensure proper movement and sealing.
20. Replace o-ring seal on volute rabbet.

**NOTE:** Always inspect o-ring seals. Replace when cracked or worn. Wet o-ring with soapy water for ease of assembly.

21. Remount casing.
22. Remount any other parts and reconnect power.

## SHIM ADJUSTMENT

When installing a replacement impeller, motor, shaft sleeve, adapter or volute, it may be necessary to adjust the number of impeller shims (Ref. No. 4) to ensure proper running clearance between impeller and the volute wear surface. Proceed as follows:

**NOTE:** Proper running clearance is 0.010”.

1. For impeller replacement, add one (1) shim in addition to those removed originally.
2. For motor replacement, add one (1) shim in addition to the shims removed during disassembly.
3. Reassemble the pump as described in steps 15, 16, and 17. (See “Mechanical Seal Replacement” section).

**IMPORTANT:** Check the shaft to make sure it is turning freely (rotate the impeller by the impeller lock bolt with an Allen wrench or by the acorn nut with a socket wrench). If it turns freely, check to ensure that the volute and adapter are fitted metal-to-metal where they meet on the outside. If they are not metal-to-metal, tighten fasteners and recheck the shaft for free turning. Tighten carefully, turning the shaft while tightening so that the motor bearings are not damaged in the event that too many shims were installed. If shaft seizes before fasteners are completely tight, disassemble the pump and remove one (1) shim and repeat reassembly.

**NOTE:** When adding or removing shims, it is best to proceed with a 0.010” increment each time. If motor shaft does turn freely, add shims until it does strike, then remove a 0.010” shim. This will ensure maximum performance.

## IMPELLER, WEARPLATE, AND VOLUTE REPLACEMENT

Impeller (Ref. No. 3), wear plate (Ref. No. 23) and volute (Ref. No. 2) are subject to wear only by abrasive sand or sediment laden liquids. If badly worn, all these parts can be replaced easily and the pump thus restored to full efficiency.

**NOTE:** When the clearance between the impeller and the volute exceeds 1/16” at the face of the impeller or 1/8” on the outside diameter of the impeller, it may be necessary to take corrective action. The increased clearance can cause lengthened priming times and reduce pumping capacity. If both the priming and capacity of your unit are satisfactory for your application, it is recommended that no corrective maintenance be performed regardless of what clearances on your unit may have developed, since the increased clearances in themselves are not generally harmful to your pump.

Normally, new pump clearances can be restored by simply shimming behind the impeller. (Add impeller shims (Ref. No. 4). If the impeller is badly worn, it is recommended that the impeller be replaced. This is usually all that is required since only on unusually abrasive service does the cast iron wear plate and volute show deterioration. Occasionally a stone or hard object might get caught in the impeller and cause damage to the volute. In these cases, follow the instructions below for replacement and refer to the associated Repair Parts Illustration.

1. Disassemble pump for access as described in MECHANICAL SEAL REPLACEMENT, steps 1, 2, 3 and 4.
2. Replace parts as necessary.

**NOTE:** When replacing volute, attach flapper valve to new volute.

To replace rear wear plate (Ref. No. 23), remove impeller (Ref. No. 3) and fasteners (Ref. No. 24).

**NOTE:** Before installing new parts, clean all mating surfaces thoroughly.

## CLEANING

These units are designed with a removable volute and suction cleanout cover (394A-95, 394B-95, 394C-95, 394D-95 and 399A-95) enabling the pump to be cleaned or unclogged with ease. Remove the suction clean out cover plate (Ref. No. 26) and gasket and/or remove the casing and volute. Remove any debris found inside the unit, reassemble as described in MECHANICAL SEAL REPLACEMENT steps 17 to 22.

**NOTE:** When replacing clean out cover plate, carefully wipe clean all surfaces on which the gasket has contact. Also, make sure the gasket is in position.

## FLAPPER VALVE CLEANING

If debris clogging the flapper valve becomes a constant problem, the flapper area can be cut from the perimeter gasket area and removed from the pump. It is important that the perimeter of the flapper valve remains to seal the inlet area of the casing/volute from the discharge area.

**NOTE:** Priming efficiency will be reduced if flapper portion is removed.

**NOTE:** Do not remove entire flapper valve. Perimeter of valve must remain; remove only the flapper area. The pump will not prime and performance will be affected if entire flapper valve is removed.

# Sewage/Trash Pumps

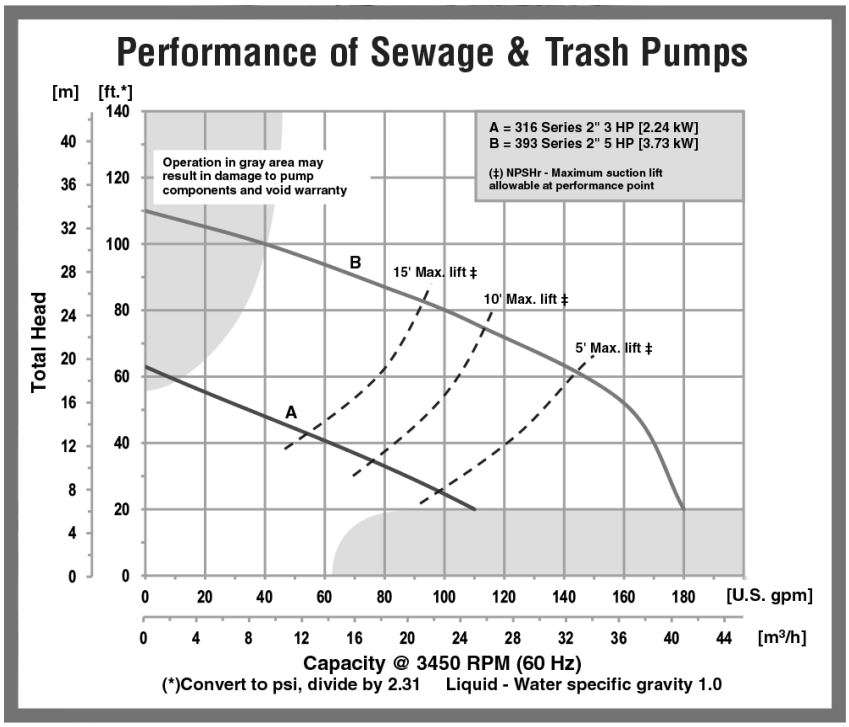


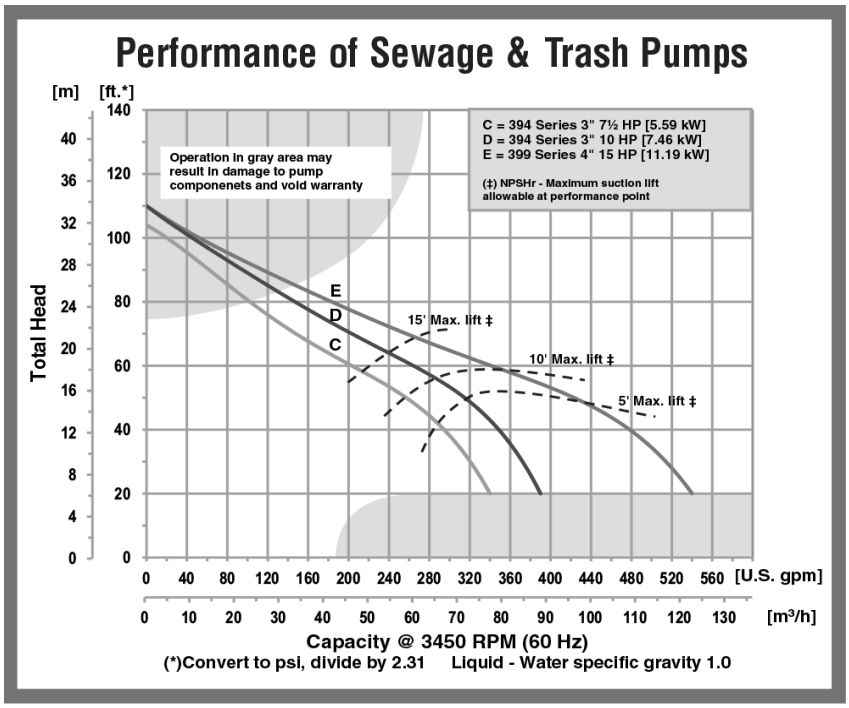


Figure 3 - Performance Curve

# Sewage/Trash Pumps

## *For Repair Parts contact dealer where pump was purchased.*

***Please provide following information:***
***-Model Number***
***-Serial Number (if any)***

***Part description and number as shown in parts list***

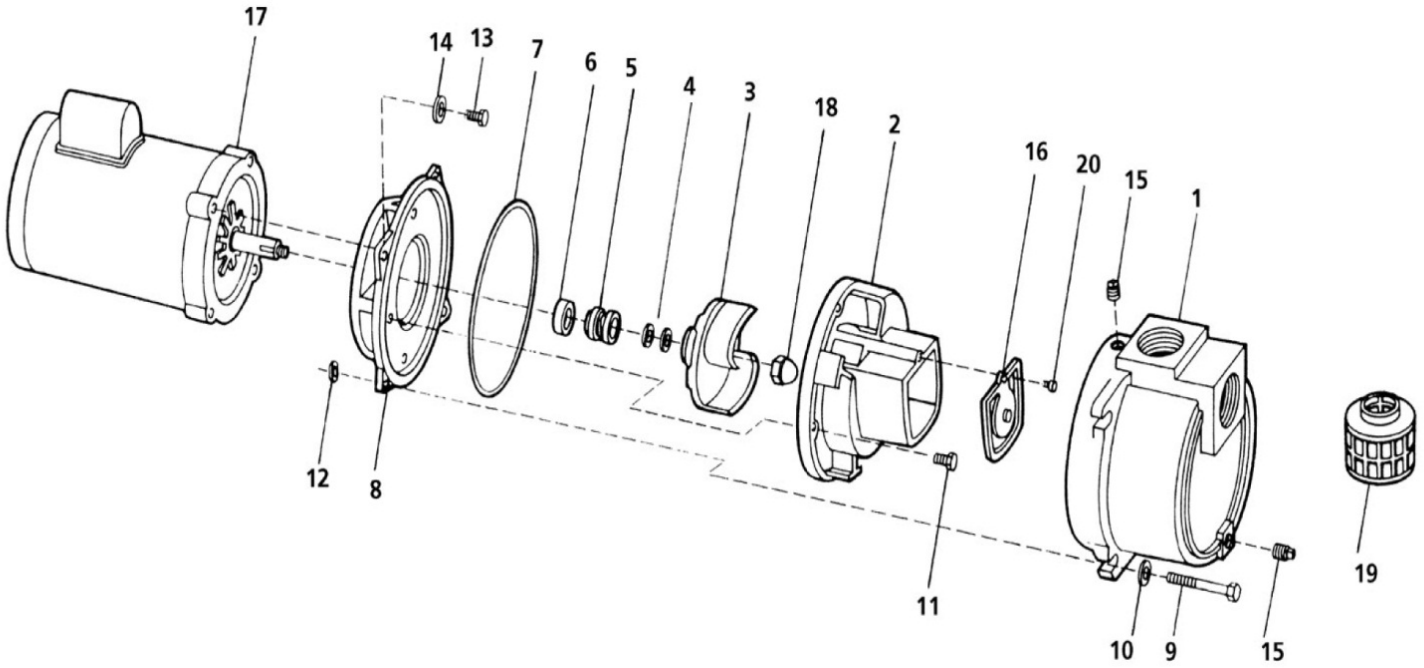


Figure 4 - Repair Parts Illustrations

## Repair Parts List

| Ref No. | Description | Part Number for Models 316A-95 | 316B-95 | Qty |
|---|---|---|---|---|
| 1 | Casing | 2111-001-02 | 2111-001-02 | 1 |
| 2 | Volute | 3163-150-09 | 3163-150-09 | 1 |
| 3 | Impeller | 3163-011-01 | 3163-011-01 | 1 |
| 4 | Impeller Shim Set | 1806-044-90 | 1806-044-90 | 1 |
| 5 & 6 | Seal Assembly – Viton and Silicon Carbide | 1640-165-90 | 1640-165-90 | 1 |
| 7 | O-Ring – Buna-N | Incl. w/Ref. 21 | Incl. w/Ref. 21 | 1 |
| 8 | Adapter | 1608-011-00 | 1608-011-00 | 1 |
| 9 | 3/8"-16 UNC x 2-3/4" Hex Head Bolt | * | * | 4 |
| 10 | 3/8" Flat Washer | * | * | 4 |
| 11 | #10-24 UNC x 7/8" S.S. Socket Head Cap Screw | * | * | 1 |
| 12 | 3/8"-16 UNC Hex Nut | * | * | 4 |
| 13 | 3/8"-16 UNC x 1" Hex Head Cap Screw | * | * | 4 |
| 14 | 3/8" Split Lock Washer | * | * | 4 |
| 15 | ½" NPT Pipe Plug | * | * | 2 |
| 16 | Flapper Valve Assembly – Buna-N | Incl. w/Ref. 21 | Incl. w/Ref. 21 | 1 |
| 17 | △ Motor | 1627-312-00 | 1626-306-00 | 1 |
| 18 | Impeller Lock Nut | 1784-001-00 | 1784-001-00 | 1 |
| 19 | Suction Strainer | 1679-001-00 | 1679-001-00 | 1 |
| 20 | #10-24 UNC x 3/8" Flat Head Machine Screw | * | * | 1 |
| 21 | Gasket Kit – Buna-N (Includes Ref. Nos. 7 & 16) | 3163-300-90 | 3163-300-90 | 1 |

(△) Foot package 1626-040-00 required on these motors.

(*) Standard hardware item, available locally.

# Sewage/Trash Pumps

## *For Repair Parts contact dealer where pump was purchased.*

***Please provide following information:***
***-Model Number***
***-Serial Number (if any)***

***Part description and number as shown in parts list***

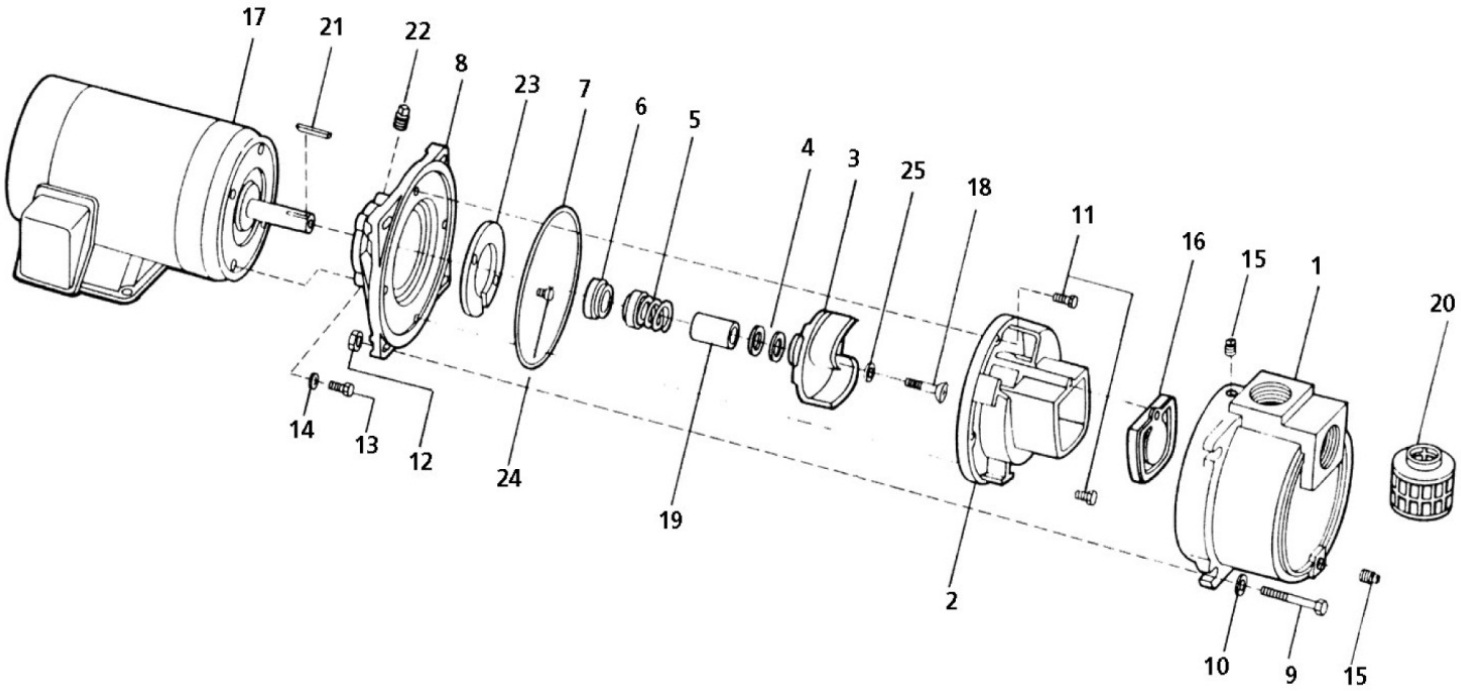


Figure 5 - Repair Parts Illustrations

## Repair Parts List

| Ref No. | Description | Part Number for Models 393A-95 | 393B-95 | Qty |
|---|---|---|---|---|
| 1 | Casing | 2112-001-02 | 2112-001-02 | 1 |
| 2 | Volute | 2182-002-00 | 2182-002-00 | 1 |
| 3 | Impeller Kit | 3935-011-98 | 3935-011-98 | 1 |
| | (Includes Ref. Nos. 3, 4, 18, & 21) | | | |
| 4 | Impeller Shim Set | 1664-000-90 | 1664-000-90 | 1 |
| 5 & 6 | Seal Assembly – Viton and Silicon Carbide | 1640-167-90 | 1640-167-90 | 1 |
| 7 | O-Ring – Buna-N | Incl. w/Ref. 26 | Incl. w/Ref. 26 | 1 |
| 8 | Adapter | 3655-030-01 | 3655-030-01 | 1 |
| 9 | 3/8"-16 UNC x 3-1/2" Hex Head Bolt | * | * | 4 |
| 10 | 3/8" Flat Washer | * | * | 4 |
| 11 | #10-24 x 7/8" Machine Screw, SS | * | * | 2 |
| 12 | 3/8"-16 Hex Nut | * | * | 4 |
| 13 | 3/8"-16 x 1-1/4" Hex Head Cap Screw | * | * | 4 |
| 14 | 3/8" Helical Split Lock Washer | * | * | 4 |
| 15 | ½"-14 NPT Pipe Plug | * | * | 2 |
| 16 | Flapper Valve Assembly – Buna-N | 1609-002-00 & Incl. w/Ref. 26 | 1609-002-00 & Incl. w/Ref. 26 | 1 |
| 17 | Motor | 1627-352-00 | 1626-078-00 | 1 |
| 18 | Impeller Screw | Incl. w/Ref. 3 | Incl. w/Ref. 3 | 1 |
| 19 | Shaft Sleeve | 1555-142-00 | 1555-142-00 | 1 |
| 20 | Suction Strainer | 1679-001-00 | 1679-001-00 | 1 |
| 21 | Impeller Key | 1471-030-00 & Incl. w/Ref. 3 | 1471-030-00 & Incl. w/Ref. 3 | 1 |
| 22 | 1/8” Pipe Plug | * | * | 1 |
| 23 | Wear Plate | 3655-032-00 | 3655-032-00 | 1 |
| 24 | 5/16"-18 x ½" Flat Head Machine Screw | * | * | 2 |
| 25 | O-Ring – Buna-N | Incl. w/Ref. 26 | Incl. w/Ref. 26 | 1 |
| 26 | Gasket Kit – Buna-N | 393A-300-90 | 393A-300-90 | 1 |
| | (Includes Ref. Nos. 7, 16, & 25) | | | |

**NOTE:** When replacing a seal assembly, a new O-ring (Ref. No. 25) should be also replaced.

(*) Standard hardware item, available locally.

# Sewage/Trash Pumps

## *For Repair Parts contact dealer where pump was purchased.*

***Please provide following information:***
***-Model Number***
***-Serial Number (if any)***

***Part description and number as shown in parts list***

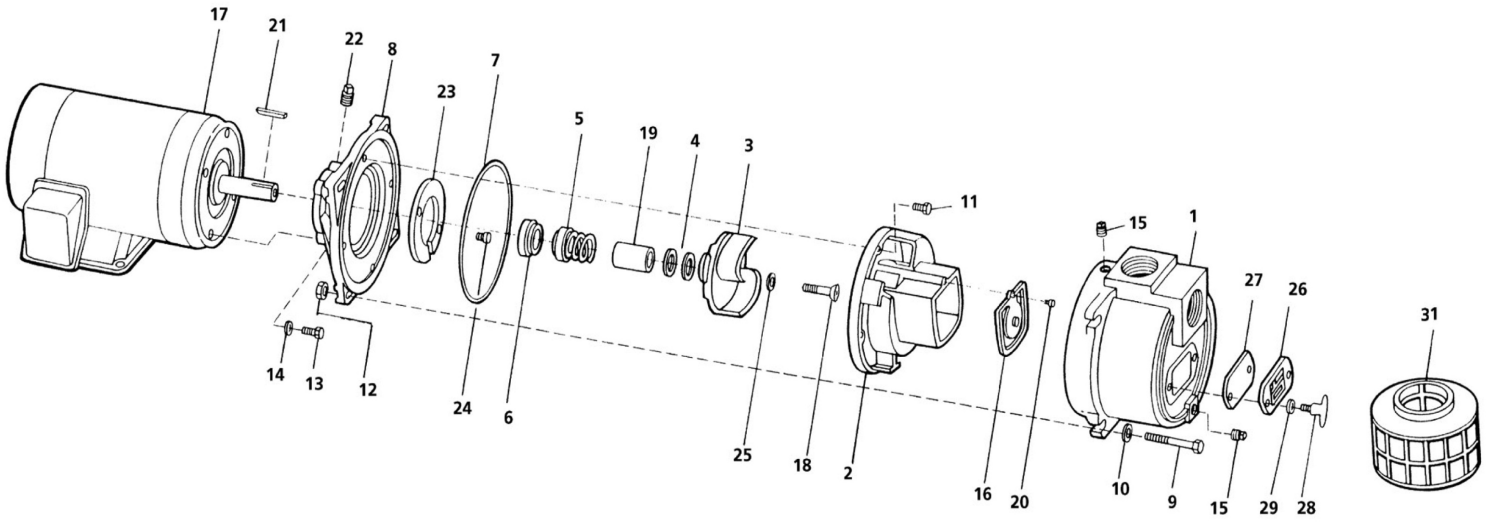


Figure 6 - Repair Parts Illustrations

## Repair Parts List

| Ref No. | Description | Part Number for Models 394A-95 | 394B-95 | Qty |
|---|---|---|---|---|
| 1 | Casing | 2113-003-01 | 2113-003-01 | 1 |
| 2 | Volute | 2184-002-01 | 2184-002-01 | 1 |
| 3 | Impeller Kit | 394A-010-98 | 394A-010-98 | 1 |
| | (Includes Ref. Nos. 3, 4, 18, & 21) | | | |
| 4 | Impeller Shim Set | 1664-000-90 | 1664-000-90 | 1 |
| 5 & 6 | Seal Assembly – Viton and Silicon Carbide | 1640-167-90 | 1640-167-90 | 1 |
| 7 | O-Ring – Buna-N | Incl. w/Ref. 30 | Incl. w/Ref. 30 | 1 |
| 8 | Adapter | 1990-031-01 | 1990-031-01 | 1 |
| 9 | 1/2"-13 x 4-3/4" Hex Bolt | * | * | 4 |
| 10 | ½" Flat Washer | * | * | 4 |
| 11 | 1/4"-20 x 7/8" Hex Screw (stainless steel) | * | * | 2 |
| 12 | 1/2"-13 Hex Nut | * | * | 4 |
| 13 | 3/8"-16 x 1-1/4" Hex Screw | * | N/A | 4 |
| 13 | 1/2"-13 x 1-1/2" Hex Screw | N/A | * | 4 |
| 14 | 3/8" Helical Spring Lock Washer | * | N/A | 4 |
| 14 | ½" Helical Spring Lock Washer | N/A | * | 4 |
| 15 | 3/4"-14 NPT Pipe plug | * | * | 2 |
| 16 | Flapper Valve Assembly – Neoprene | 3590-070-90 | 3590-070-90 | 1 |
| 17 | Motor | 1627-353-00 | 1626-079-00 | 1 |
| 18 | Impeller Screw | Incl. w/Ref. 3 | Incl. w/Ref. 3 | 1 |
| 19 | Shaft Sleeve | 1555-142-00 | 1555-142-00 | 1 |
| 20 | #10-24 x 3/8" Flat Head Machine Screw | * | * | 1 |
| 21 | Impeller Key | 1471-030-00 | 1471-030-00 | 1 |
| 22 | 1/8”-27 Pipe Plug | * | * | 1 |
| 23 | Wear Plate | 2182-004-01 | 2182-004-01 | 1 |
| 24 | 5/16"-18 x ½" Flat Head Machine Screw | * | * | 2 |
| 25 | O-Ring – Buna-N | Incl. w/Ref. 30 | Incl. w/Ref. 30 | 1 |
| 26 | Clean Out Cover | 2115-002-01 | 2115-002-01 | 1 |
| 27 | Clean Out Gasket – Neoprene | 2115-003-00 | 2115-003-00 | 1 |
| 28 | Clean Out Handle | 1601-000-00 | 1601-000-00 | 2 |
| 29 | 3/8” Flat Washer | * | * | 2 |
| 30 | Gasket Kit – Buna-N | 394A-300-90 | 394A-300-90 | 1 |
| | (Includes Ref. Nos. 7, 16, 25, & 27) | | | |
| 31 | Suction Strainer | 1681-000-00 | 1681-000-00 | 1 |

**NOTE:** When replacing a seal assembly, a new O-ring (Ref. No. 25) should be also replaced.

(*) Standard hardware item, available locally.

# Sewage/Trash Pumps

## *For Repair Parts contact dealer where pump was purchased.*

***Please provide following information:***
***-Model Number***
***-Serial Number (if any)***

***Part description and number as shown in parts list***

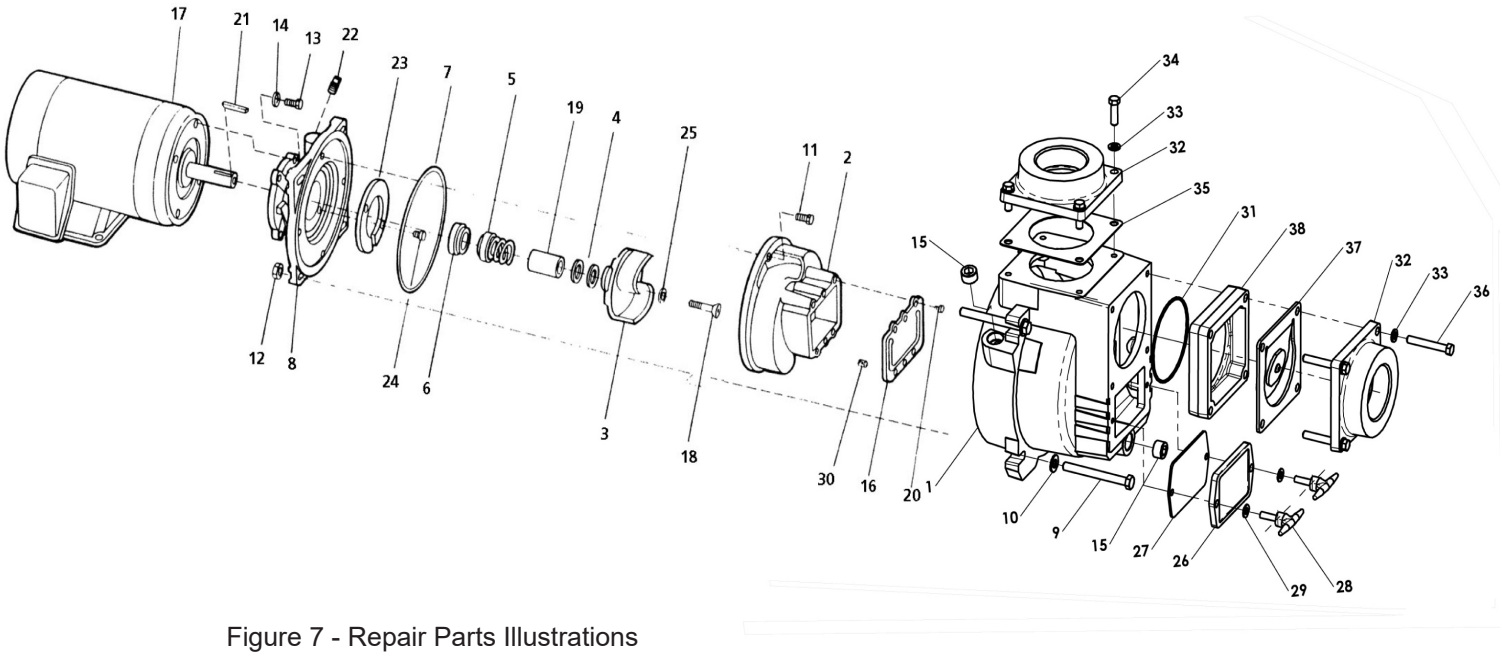


Figure 7 - Repair Parts Illustrations

## Repair Parts List

| Ref No. | Description | Part Number for Models 394E-95 394F-95 | 399C-95 | Qty |
|---|---|---|---|---|
| 1 | Casing Kit | 399C-002-95 | 399C-002-95 | 1 |
| | (includes Ref. Nos. 1, 9, 10, 12, & 15) | | | |
| 2 | Volute Kit | 399C-150-95 | 399C-150-95 | 1 |
| | (includes Ref. Nos. 2 & 11) | | | |
| 3 | Impeller Kit | 394C-010-98 | 399A-010-98 | 1 |
| | (includes Ref. Nos. 3, 4, 18, & 21) | | | |
| 4 | Impeller Shim Set | 1664-000-90 | 1664-000-90 | 1 |
| 5 & 6 | Seal Assembly – Viton and Silicon Carbide | 1640-167-90 | 1640-167-90 | 1 |
| 7 | O-Ring – Buna-N | Incl. w/Ref. 39 | Incl. w/Ref. 39 | 1 |
| 8 | Adapter | 394B-031-95 | 394B-031-95 | 1 |
| | (includes Ref. Nos. 8, 13, 14, 19, 22, 23, & 24) | | | |
| 9 | 1/2"-13 x 4-3/4" Hex Bolt | * | * | 4 |
| 10 | ½" Flat Washer | * | * | 4 |
| 11 | 1/4"-20 x 3/4" Hex Screw (stainless steel) | * | * | 2 |
| 12 | 1/2"-13 Hex Nut | * | * | 4 |
| 13 | 1/2"-13 x 1-1/2" Hex Screw | * | * | 4 |
| 14 | ½" Lock Washer | * | * | 4 |
| 15 | 3/4"-14 NPT Pipe plug | Incl. w/Ref. 39 | Incl. w/Ref. 39 | 2 |
| 16 | Volute Gasket – Buna-N | Incl. w/Ref. 39 | Incl. w/Ref. 39 | 1 |
| 17 | Motor – 1PH | 1626-080-00 | N/A | 1 |
| | Motor – 3PH | 1627-354-00 | 1627-355-00 | 1 |
| 18 | Impeller Screw | 1756-004-00 | 1756-004-00 | 1 |
| 19 | Shaft Sleeve | 1555-142-00 | 1555-142-00 | 1 |
| 20 | #10-24 x 3/8" Flat Head Machine Screw | * | * | 1 |
| 21 | Impeller Key | 1471-030-00 | 1471-030-00 | 1 |
| 22 | 1/8” NPT Pipe Plug | * | * | 1 |
| 23 | Wear Plate | 399C-060-95 | 399C-060-95 | 1 |
| | (includes Ref. Nos. 23 & 24) | | | |
| 24 | 5/16"-18 x ½" Flat Head Machine Screw | * | * | 2 |
| 25 | O-Ring – Buna-N | Incl. w/Ref. 39 | Incl. w/Ref. 39 | 1 |
| 26 | Clean Out Cover/Handle Kit | 399C-040-95 | 399C-040-95 | 1 |
| | (includes Ref. Nos. 26, 28, & 29) | | | |
| 27 | Clean Our Gasket – Neoprene | Incl. w/Ref. 39 | Incl. w/Ref. 39 | 1 |
| 28 | Clean Out Handle | Incl. w/Ref. 26 | Incl. w/Ref. 26 | 2 |
| 29 | 3/8” Flat Washer | Incl. w/Ref. 26 | Incl. w/Ref. 26 | 2 |
| 30 | 1/8" Diameter x 3/8" Long Pin | Incl. w/Ref. 26 | Incl. w/Ref. 26 | 4 |
| 31 | O-Ring – Buna-N | Incl. w/Ref. 39 | Incl. w/Ref. 39 | 1 |
| 32 | Discharge Flange Kit | 394E-080-95 | 399C-08095 | 2 |
| | (includes Ref. Nos. 32, 33, & 34) | | | |
| 33 | 7/16" Lock Washer | * | * | 8 |
| 34 | 7/16"-14 x 1-1/2" Hex Screw | * | * | 4 |
| 35 | Flange Gasket – Neoprene | Incl. w/Ref. 39 | Incl. w/Ref. 39 | |
| 36 | 7/16"-14 x 3" Hex Screw | * | * | |
| 37 | Check Valve Assembly - Neoprene | 399C-070-90 | 399C-070-90 | 1 |
| 38 | Suction Flange Kit | 394E-050-95 | 399C-050-95 | 1 |
| | (includes Ref. Nos. 32, 33, 36, & 38) | | | |
| 39 | Gasket Kit – Buna-N | 399C-300-90 | 399C-300-90 | 1 |
| | Gasket Kit – Viton | 399C-300-91 | 399C-300-91 | |
| | (Includes Ref. Nos. 7, 16, 20, 25, 27, 30, 31, & 35) | | | |
| 40 | Suction Strainer (not shown) | 1681-000-00 | 1681-000-00 | 1 |

**NOTE:** When replacing a seal assembly, a new O-ring (Ref. No. 25) should be also replaced.

(*) Standard hardware item, available locally.

AMT Pump Company
(herein "AMT")
400 Spring Street
Royersford, PA 19468
Phone: (610) 948-3800
Fax: (610) 948-5300
www.amtpump.com

# General Information

***SALES POLICY:*** AMT products are sold through our established Distributors. We do not sell direct to the consumer or organization not entitled to trade recognition. Therefore, possession of our catalogs and/or price list(s) does not infer an offer to sell.

***MINIMUM ORDER:*** We appreciate your order, however, all orders are subject to a minimum $35.00 net invoice charge (excluding freight). This applies to all pump and parts purchase orders.

***PRICES:*** Prices are subject to change without notice. All orders accepted are subject to prices in effect at time of shipment.

***PAYMENT TERMS:*** Terms, upon establishment of credit, are Net 30 days. Past due accounts may be subject to a service charge of 1.5% per month. Domestic or assignable letter of credit is required for all export trade.

***PAST DUE ACCOUNTS:*** AMT reserves the right to withhold open account shipments on any past due account. Invoices are considered past due after thirty (30) days. In the interest of sound business, all orders are subject to approval of the Credit Department.

***SHIPPING INSTRUCTIONS:*** All shipments will be made F.O.B. the factory. Where instructions for shipment do not appear on the order, the shipment will be made according to our best judgment. Full risk of loss (including transportation delays and losses) shall pass to the customer upon delivery of the products to the carrier at the F.O.B. point. When loss or delay occurs, primary responsibility for tracing rests with the customer. When there is LOSS or APPARENT VISIBLE DAMAGE to a shipment, when tendered for delivery, *DO NOT* give the carrier a clear receipt. Note such damage on the carrier's delivery receipt and *HAVE THE DRIVER SIGN THE RECEIPT.*

***PRODUCT REVISIONS:*** AMT reserves the right to discontinue, change or improve its products or any portions thereof without being obligated to provide such a change or improvement for units sold and/or shipped prior to such a change or improvement.

***LEAD TIME:*** Products designated "Quick Ship Product", also referred to as "QSP" will normally be shipped within 24 hours of receipt of a non-cancellable purchase order. Only limited quantities of "QSP" pumps are available.

***STANDARD LEAD TIME:*** Lead time is two weeks for all non "QSP" product. AMT reserves the right to revise lead times as required due to availability of materials and all other causes beyond our control.

***VIP SHIPMENT:*** Select AMT and IPT branded pumps are available for next day shipment for non-QSP (Quick Ship Products) items and subjected to a specific model surcharge per unit noted in the respective price book. Requires calling for availability, confirmation and a non-cancellable purchase order or credit card payment prior to shipment. The expedited shipping charges are an additional cost added separately from the VIP charges per item. AMT reserves the right to revise lead times as required due to availability of materials and all other causes beyond our control. QSP quantities are limited as determined by AMT.

ALL purchase orders must be submitted via hard copy sent to AMT customer service department by fax, EDI or e-mail.

***RETURN GOODS POLICY:*** Goods shall not be returned without a return goods authorization number (RGA) issued by AMT customer service. The RGA number must be listed on the packing list. Only current model and part numbers with a valid date code may be returned (within one year from date of purchase). **A 20% restocking and packaging charge will apply to all returns. All shipping charges must be pre-paid. No exceptions.**

***ORDER CHANGES BY CUSTOMER:*** Orders in process may not be changed except with written consent and may be subject to special charges.

# 12 Month Limited Warranty

***EXTENT AND DURATION OF LIMITED WARRANTY***

**Coverage:** AMT Pump Company (herein "AMT") or IPT Pumps by Gorman-Rupp (herein "IPT") or Gorman-Rupp Industries Division of the The Gorman-Rupp Company, Patterson, or the Gorman-Rupp Company (herein referred to as "G-R Unit) each individually warrants that its products and parts shall be free from defects in material and workmanship for twelve (12) months from the date of purchase by the original end user when installation is made and maintenance is performed in accordance with G-R Unit's recommendations. Wear and tear resulting from use and items normally consumed in use are not covered.

***EXCEPTIONS***

( A ) This Limited Warranty shall not apply to mechanical seals in AMT or IPT pumps and the following products and parts: engines, motors, trade accessories and all other products, components, parts and materials not manufactured by the G-R Units. These items may, however, be covered by the warranties of their respective manufacturers. ( B ) This warranty does not extend to or apply to any unit which has been repaired or altered at any place other than by a G-R Unit, or by persons not expressly approved by a G-R Unit to make repairs or alterations, nor to any unit the serial number, model number or identification of which has been removed, defaced or altered. ( C ) This warranty does not extend to any product manufactured by a G-R Unit, which has been subjected to mis-use, neglect, accident, improper installation, or use in violation of instructions furnished by a G-R Unit. ( D ) Pump Kits: This warranty does not extend to any product sold by a G-R Unit unassembled as a Pump Kit. Pump Kits are warranted against defects in material and workmanship for 60 days from the date of shipment from a G-R Unit. Any Pump Kit parts deemed defective by a G-R Unit will be replaced free of charge within 60 days of shipment. Pump Kits are not returnable for credit.

***LIMITATIONS***

**THE G-R UNITS' SOLE AND EXCLUSIVE WARRANTY WITH RESPECT TO THEIR PRODUCTS AND PARTS IS THIS LIMITED WARRANTY. THIS LIMITED WARRANTY IS IN LIEU OF ALL OTHER EXPRESS AND/OR IMPLIED WARRANTIES, INCLUDING IMPLIED WARRANTIES OF MERCHANTABILITY AND FITNESS FOR PARTICULAR PURPOSE.**

***EXCLUSIVE REMEDY AND DAMAGES***

The sole and exclusive remedy for breach of this Warranty by a G-R Unit and the entire extent of its liability for such breach or for damages arising from the use of the products and parts covered under this Limited Warranty, shall be as follows:

1. **Repair or Replacement:** If inspection shows that any G-R Unit product or part covered under this Limited Warranty is defective in materials or workmanship, the G-R Unit shall repair or replace the defective or non-conforming product or part without charge, whichever the G-R Unit chooses. You must have properly maintained and used the product or part claimed to be defective in accordance with the maintenance schedule or manual, which comes with the product. No allowance will be made for labor, installation, removal, transportation or other charges incurred by you in connection with such repair or replacement.
2. To obtain the above remedy:
    A. Immediately notify the G-R Unit upon discovery of the claimed defect in materials or workmanship and provide the serial number or date code of the product and/or part(s) or provide the G-R Unit with the invoice or bill of sale referencing the product by no later than the expiration date of the warranty period.
    B. The G-R Unit will advise whether inspection will be necessary and how whether repair or replacement will be made. If inspection by the G-R Unit is necessary, the pump or defective part must be sent freight pre-paid to the G-R Unit. Return shipment will be F.O.B. the G-R Unit's plant.
    C. **Return Goods Authorization Requirement:** No product will be accepted for return or replacement without the prior written authorization of the G-R Unit. Upon such authorization, and in accordance with instructions from the G-R Unit, the product will be returned to the G-R Unit, shipping charges prepaid by the Buyer.

3. **Damages:** The G-R Unit's liability for damages for breach of this Limited Warranty shall not exceed the amount of the purchase price of the product or part(s) in respect to which Such damages are claimed. **IN NO EVENT SHALL THE G-R UNITS BE LIABLE FOR INCIDENTAL, CONSEQUENTIAL OR SPECIAL DAMAGES FOR BREACH OF THIS LIMITED WARRANTY.**

Some states do not allow the exclusion or limitation of incidental or consequential damages, so the above limitation or exclusion may not apply to you. This Limited Warranty gives you specific legal rights, and you may also have other rights, which vary from state to state.