Please read and save this Repair Parts Manual. Read this manual and the General Operating Instructions carefully before attempting to assemble, install, operate or maintain the product described. Protect yourself and others by observing all safety information. The Safety Instructions are contained in the General Operating Instructions. Failure to comply with the safety instructions accompanying this product could result in personal injury and/or property damage! Retain instructions for future reference. AMT reserves the right to discontinue any model or change specifications at any time without incurring any obligation.
©2017 AMT Pump Company, A Subsidiary of The Gorman-Rupp Company, All Rights Reserved.

Periodic maintenance and inspection is required on all pumps to ensure proper operation. Unit must be clear of debris and sediment. Inspect for leaks and loose bolts. Failure to do so voids warranty.

4-INCH TRASH PUMP

Refer to pump manual 1808-633-00 for General Operating and Safety Instructions.

AMT A Gorman-Rupp Company

DESCRIPTION

This trash pump is a heavy duty, centrifugal, engine-driven, self-priming (to 20 ft. lift after initially filling casing with liquid) portable unit. Pump is equipped with precision lapped mechanical seal to reduce the likelihood of leakage and a clog-resistant impeller capable of handling solids up to 2" diameter. Units are used to handle water containing stones, sticks, mud and other solids (up to 25% by volume). O-ring sealed flange connections facilitate easy removal of suction and discharge lines. Handles liquids from 40º to 180º F (4º to 82º C). For use with nonflammable fluids compatible with pump component materials.

All models come standard with manual recoil starter, E-start models 3993-96, 3993-Z6 and 3994-96 feature in addition a 12V electric starter switch and cables. 5" W x 7¾" L x 5" H battery holder included. (Battery not included; obtain 12V, 32 amp hour battery from local lawn and garden shop).

Pump and engine are mounted on rugged transport dolly with fully pneumatic 16" ball bearing wheels. Proper weight distribution ensures easy portability, yet pump is stable when operating. Four position discharge manifold provides a choice in placing hose.

SPECIFICATIONS

Suction inlet.....4" MNPT
Discharge outlet.....4" MNPT
Engine
4210-96.....Honda GX390
3993-96*.....B&S Vanguard
3994-96*.....Honda GX390
3993-Z6*.....Hatz 1B50
*E-Start Models

Basic construction.....Aluminum with cast iron volute, impeller, wear plates and discharge manifold; silicon carbide seal.
Battery.....12 Volt, type No. 9A1, 32 amp hour (not supplied)
Battery tray*.....5" W x 7¾" L x 5" H
(*E-Start Models)

UNPACKING

Refer to Repair Parts Illustration and Repair Parts List to aid in identifying parts. Unpack and separate all pump components from container making sure all parts are accounted for.

Packages should contain:
1. Pump and engine completely assembled on wheel kit.
2. Battery tray (Ref. No. 43) and battery tray hardware (E-start models only).
3. 4" NPT Nipple Pack and Strainer.

ASSEMBLY

(Refer to Figure 2)
1. Remove pump from packaging.
2. Stand pump carefully on pump end. Reposition handle (Ref. No. 42) (as shown in Figure 2) facing outwards by removing and replacing existing handle fasteners.
3. **Electric Start Models Only**: Attach battery tray (Ref. No. 43) to left engine rail using fasteners used with handle. Install a 12 volt type no. 9A1 garden tractor battery 32 amp hour rating, approx. size 7¾" L x 5" W x 6" H (not included) onto battery tray. Using hardware included with pump, insert hook bolts through battery tray holes, thread facing up. Attach battery box hold down bar across battery and thread wing nuts onto hook bolts. Refer to engine manual for proper wiring instructions.

NOTE: Model 3993-Z6 battery tray mounts foward as in picture below.

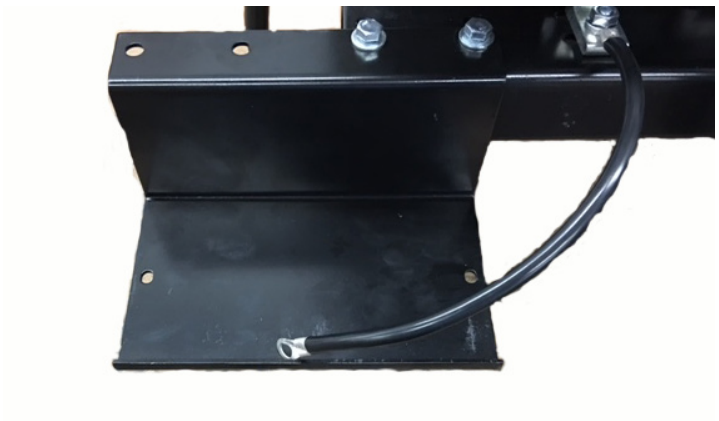

4-INCH TRASH PUMP

MAINTENANCE

MECHANICAL SEAL REPLACEMENT

Refer to Figures 1 and 2

NOTE: Always replace the seal seat (Ref. No. 12), seal head (Ref. No. 13) and shaft sleeve (Ref. No. 3) to ensure proper mating of mechanical seal components!

See Figure 1

1. Unthread cap screws (Ref. No. 20) and remove casing (Ref. No. 19) and casing seal (Ref. No. 37) from casing cover (Ref. No. 6).
2. Unthread screws (Ref. No. 15) and remove volute (Ref. No. 14) from casing cover.
3. Unscrew impeller (Ref. No. 2) from the engine shaft. Remove the impeller shim (Ref. No. 5), shaft sleeve and seal head from engine shaft. Use a rubber mallet or soft block of wood to loosen impeller. Turn it counterclockwise.

⚠WARNING

Disconnect spark plug wire and battery to prevent accidental starting.

4. Unthread cap screws (Ref. No. 9) and remove the adapter (Ref. No. 7) and casing cover from the engine mounting face.
5. Push seal seat from the casing cover recess with a screwdriver.
6. Clean the casing cover recess before inserting a new seal seat.
7. Carefully wipe the polished surface of the new seal seat with a clean cloth.
8. Wet the rubber portion of the seal seat with a light coating of soapy water.
9. Press the new seal seat squarely into the cavity in the casing cover. If the seal seat does not press squarely into the cavity, it can be adjusted in place by pushing on it with a piece of pipe. Always use a piece of cardboard between the pipe and the seal seat to avoid scratching the seal seat. (This is a lapped surface and must be handled very carefully).
10. After the seal seat is in place, ensure that it is clean and has not been marred.
11. Using a clean cloth, wipe the shaft and make certain that it is perfectly clean.
12. Secure the adapter on the engine mounting face.

NOTE: Tighten cap screws EVENLY to avoid cocking rabbet on engine mounting face.

13. Apply a light coating of soapy water to the inside rubber portion of seal head and slide onto the shaft sleeve. Slip the shaft sleeve with seal head onto the engine shaft.

IMPORTANT: Before installing new shaft sleeve, apply a bead of non hardening, pliable sealant (such as Permatex® Form-A-Gasket® No. 2) around motor shaft shoulder.

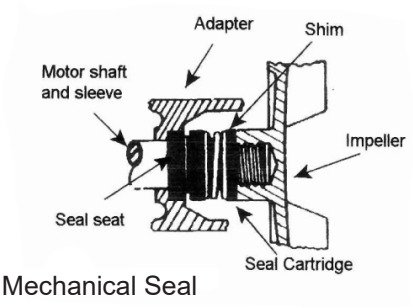

Figure 1 - Mechanical Seal

⚠ CAUTION

Do not touch or wipe the face of the polished part of the seal head.

14. Replace any impeller shims removed in disassembly.
15. Screw the impeller back in place tightening until it is seated against shims and shaft sleeve.

NOTE: Check to be sure that the shaft sleeve (Ref. No. 3) is in place against engine shaft shoulder. Model 3993-96 requires a shaft flange (Ref. No. 4).

16. Remount volute with fasteners.
17. Refer to section titled Shim Adjustment at this time if shaft sleeve or any other parts listed therein have been replaced.
18. Inspect position of flapper valve assembly (Ref. No. 16) to ensure proper movement and sealing.
19. Replace o-ring seal on volute rabbet.

NOTE: Always inspect o-ring seals. Replace when cracked or worn. Wet o-ring with soapy water for ease of assembly.

20. Remount casing.
21. Remount any other parts and reconnect spark plug wire and battery (if so equipped). Pump should now run with renewed original performance.

SHIM ADJUSTMENT

1. When installing a replacement impeller, engine, shaft sleeve, adapter, or volute, it may be necessary to vary the number of impeller shims (Ref. No. 5) that will be required. This is easily done by adding one shim more than was removed and reassembling the pump as described in Mechanical Seal Replacement section.
2. Ensure that volute (Ref. No. 14) and casing cover (Ref. No. 6) are fitted firmly (check fastener Ref. No. 15). Remove spark plug wire from engine and turn engine over by pulling the recoil starter. If engine does not turn freely, disassemble pump and remove one shim.

NOTE: When adding or removing shims, it is best to proceed with a 0.010” increment each time. If engine does turn freely, add shims until it does strike, then remove a 0.010” shim. This should allow proper clearance.

4-INCH TRASH PUMP

3. Proper running clearance is 0.010”.
4. Follow the above procedure until proper clearance is obtained. This will ensure maximum performance.

IMPELLER AND VOLUTE REPLACEMENT

Impeller (Ref. No. 2) and volute (Ref. No. 14) are subject to wear only by abrasive sand or sediment laden liquids. If badly worn, all these parts can be replaced easily and the pump thus restored to full efficiency.

NOTE: When the clearance between the impeller and the volute exceeds 1/16” at the face of the impeller or 1/8” on the outside diameter of the impeller, it may be necessary to take corrective action. The increased clearance can cause lengthened priming times and reduced pumping capacity. If both the priming and capacity of your unit are satisfactory for your application, it is recommended that no corrective maintenance be performed regardless of what clearances on your unit may have developed, since the increased clearances in themselves are not generally harmful to your pump. Normally, new pump clearances can be restored by simply shimming behind the impeller. (Add shim washers, Ref. No. 5). If the impeller is badly worn it is recommended that the impeller be replaced. This is usually all that is required since only on unusually abrasive services does the cast iron wear plate show deterioration. Occasionally a stone or hard object might get caught in the impeller and cause damage to the volute/cut water. In these cases, follow the instructions below for replacement and refer to Figure 2.

1. Disassemble pump for access as described in MECHANICAL SEAL REPLACEMENT, steps 1 and 2.
2. Replace parts as necessary.

NOTE: When replacing volute, attach flapper valve assembly (Ref. No. 16) to new volute with fasteners (Ref. No. 18).

NOTE: Before installing new parts, clean all mating surfaces thoroughly. For information pertaining to the engine and engine parts, consult the Engine Manual or contact the nearest authorized service representative or the manufacturer.

CLEANING

These units are designed so that for most clean out or clogging problems it should not be necessary to remove hoses or piping. The suction area and impeller chambers can be reached by removing (2) threaded handles (Ref. No. 26) and removing suction clean out cover plate (Ref. No. 25) and gasket (Ref. No. 36).

NOTE: When replacing clean out cover plate, carefully wipe clean all surfaces on which the gasket has contact. Also, make sure the gasket is in position. The screen in the spark arrester should be checked.

4-INCH TRASH PUMP

For Repair Parts contact dealer where pump was purchased.

Please provide following information:
-Model Number
-Serial Number (if any)

Part description and number as shown in parts list

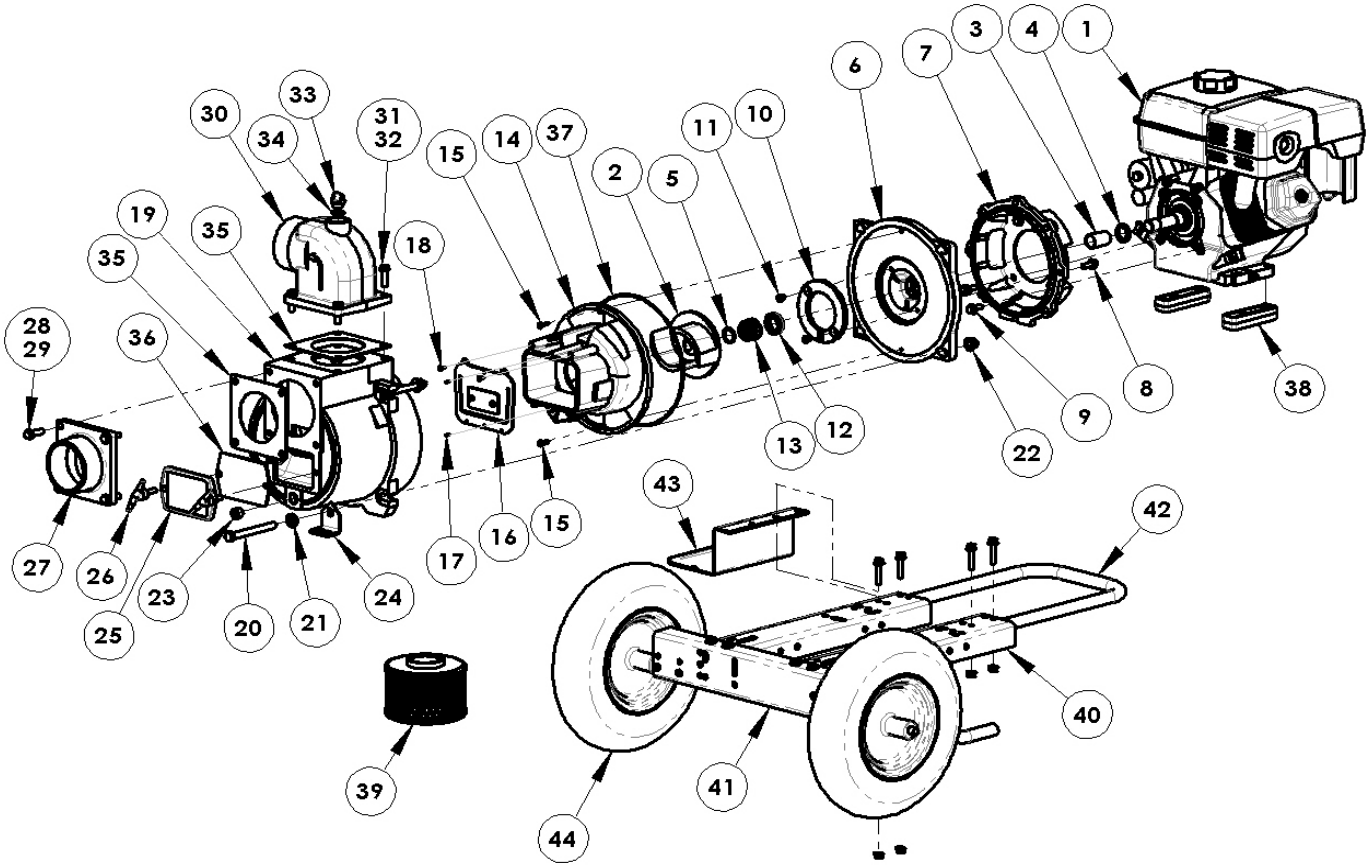

Figure 2 - Repair Parts Illustrations

Repair Parts List

Ref. No.	Description	Part Number for Models: 4210-96	3993-96	3993-Z6	3994-96	Qty.
1	Engine	1639-033-00	1639-063-00	1630-050-00	1639-031-00	1
2	Impeller Kit	3945-014-95	3945-013-95	3945-014-95	3945-015-95	1
	(Includes Ref. Nos. 2, 3, 4 & 5)					
3	Shaft Sleeve	1555-143-00 & Incl. w/Ref 2	1555-149-00 & Incl. w/Ref 2	1555-143-00 & Incl. w/Ref 2	1555-143-00 & Incl. w/Ref 2	1
4	Shaft Flange	N/A	Incl. w/Ref 2	N/A	N/A	1
5	Impeller Shim Kit	1656-000-90 & Incl. w/Ref 2	1656-000-90 & Incl. w/Ref 2	1656-000-90 & Incl. w/Ref 2	1656-000-90 & Incl. w/Ref 2	1
6	Casing Cover Kit	3993-020-96	3993-020-96	3993-022-96	3993-020-96	1
	(Includes Ref. Nos. 6, 7, 8 & 9)					
7	Adapter	Incl. w/Ref 6	Incl. w/Ref 6	Incl. w/Ref 6	Incl. w/Ref 6	1
8	Hex Screw	Incl. w/Ref 6	Incl. w/Ref 6	Incl. w/Ref 6	Incl. w/Ref 6	6
9	Hex Screw	Incl. w/Ref 6	Incl. w/Ref 6	Incl. w/Ref 6	Incl. w/Ref 6	4
10	Wear Plate Kit	2182-004-90	2182-004-90	2182-004-90	2182-004-90	1
	(Includes Ref. Nos. 10 & 11)					
11	Flat Head Screw	Incl. w/Ref 10	Incl. w/Ref 10	Incl. w/Ref 10	Incl. w/Ref 10	2
12,13	Seal Assembly-Carbon/SIC/Viton (standard)	1640-163-94	1640-163-94	1640-163-94	1640-163-94	1
	Seal Assembly-SIC/SIC/Viton (optional)	1640-167-90	1640-167-90	1640-167-90	1640-167-90	1
14	Volute Kit	399C-150-95	399C-150-95	399C-150-95	399C-150-95	1
	(Includes Ref. Nos. 14 & 15)					
15	Hex Screw	Incl. w/Ref 14	Incl. w/Ref 14	Incl. w/Ref 14	Incl. w/Ref 14	2
16	Check Valve Kit-Buna-N (standard)	1990-005-90	1990-005-90	1990-005-90	1990-005-90	1
	Check Valve Kit-EPR/EPDM (optional)	1990-019-90	1990-019-90	1990-019-90	1990-019-90	1
	Check Valve Kit-Viton (optional)	1990-013-90	1990-013-90	1990-013-90	1990-013-90	1
	(Includes Ref. Nos. 16, 17 & 18)					
17	Retainer Pin	Incl. w/Ref 16	Incl. w/Ref 16	Incl. w/Ref 16	Incl. w/Ref 16	4
18	Flat Head Screw	Incl. w/Ref 16	Incl. w/Ref 16	Incl. w/Ref 16	Incl. w/Ref 16	2
19	Casing Kit	2116-001-96	2116-001-96	2116-001-96	2116-001-96	1
	(Includes Ref. Nos. 19, 20, 21, 22 & 23)					
20	Hex Bolt	Incl. w/Ref 19	Incl. w/Ref 19	Incl. w/Ref 19	Incl. w/Ref 19	4
21	Flat Washer	Incl. w/Ref 19	Incl. w/Ref 19	Incl. w/Ref 19	Incl. w/Ref 19	8
22	Hex Nut	Incl. w/Ref 19	Incl. w/Ref 19	Incl. w/Ref 19	Incl. w/Ref 19	4
23	1/2" NPT Plug	Incl. w/Ref 19	Incl. w/Ref 19	Incl. w/Ref 19	Incl. w/Ref 19	1
24	Casing Foot Kit	3993-109-90	3993-109-90	3993-109-90	3993-109-90	1
	(includes 2 feet and mounting hardware)					
25	Clean Out Cover Kit	2115-002-95	2115-002-95	2115-002-95	2115-002-95	1
	(Includes Ref. Nos. 25 & 26)					
26	Handle Stud	Incl. w/Ref 25	Incl. w/Ref 25	Incl. w/Ref 25	Incl. w/Ref 25	2
27	Suction Flange Kit	3993-050-95	3993-050-95	3993-050-95	3993-050-95	1
	(Includes Ref. Nos. 27, 28 & 29)					
28	Hex Screw	Incl. w/Ref 27	Incl. w/Ref 27	Incl. w/Ref 27	Incl. w/Ref 27	4
29	Lock Washer	Incl. w/Ref 27	Incl. w/Ref 27	Incl. w/Ref 27	Incl. w/Ref 27	4
30	Discharge Manifold Kit	3993-080-95	3993-080-95	3993-080-95	3993-080-95	1
	(Includes Ref. Nos. 30, 31 & 32)					
31	Hex Screw	Incl. w/Ref 30	Incl. w/Ref 30	Incl. w/Ref 30	Incl. w/Ref 30	4
32	Lock Washer	Incl. w/Ref 30	Incl. w/Ref 30	Incl. w/Ref 30	Incl. w/Ref 30	4
33	Fill Plug Kit-Buna-N oring (standard)	3SXB-170-90	3SXB-170-90	3SXB-170-90	3SXB-170-90	1
	Fill Plug Kit-EPR/EPDM oring (optional)	3SXE-170-90	3SXE-170-90	3SXE-170-90	3SXE-170-90	1
	Fill Plug Kit-Viton oring (optional)	3SXV-170-90	3SXV-170-90	3SXV-170-90	3SXV-170-90	1
	(Includes Ref. Nos. 33 & 34)					
34	#117 O-ring	Incl. w/Ref 33	Incl. w/Ref 33	Incl. w/Ref 33	Incl. w/Ref 33	1

Repair Parts List - CONTINUED

Ref.		Part Number for Models:				
No.	Description	4210-96	3993-96	3993-Z6	3994-96	Qty.
KIT	Gasket Kit-Buna-N (standard)	3993-301-90	3993-301-90	3993-301-90	3993-301-90	1
	Gasket Kit-EPR/EPDM (optional)	3993-301-91	3993-301-91	3993-301-91	3993-301-91	1
	Gasket Kit-Viton (optional)	3993-301-92	3993-301-92	3993-301-92	3993-301-92	1
	(includes Ref. Nos. 34, 35, 36 & 37)					
35	Flange Gasket	Incl. w/Ref KIT	Incl. w/Ref KIT	Incl. w/Ref KIT	Incl. w/Ref KIT	2
36	Clean Out Cover Gasket	Incl. w/Ref KIT	Incl. w/Ref KIT	Incl. w/Ref KIT	Incl. w/Ref KIT	1
37	#276 O-ring	Incl. w/Ref KIT	Incl. w/Ref KIT	Incl. w/Ref KIT	Incl. w/Ref KIT	1
38	Mount hardware kit	3993-107-90	3993-107-90	4S13-100-90	3993-107-90	1
	(includes raising blocks, bolts, nuts & washers)					
39	Suction Strainer	1681-001-00	1681-001-00	1681-001-00	1681-001-00	1
40	Frame Rail Kit	3993-111-90	3993-111-90	3993-111-90	3993-111-90	2
	(includes 1 rail, bolts & nuts)					
41	Axle Rail Kit	3993-110-90	3993-110-90	3993-110-90	3993-110-90	1
	(includes axles assembled to rail, bolts & nuts)					
42	Handle Kit	3993-100-90	3993-100-90	3993-100-90	3993-100-90	1
	(includes handle, 4 bolts & nuts)					
43	Battery Tray Kit	N/A	3993-106-90	3993-106-90	3993-106-90	1
	(includes base tray, hold down, J bolts & wing nuts)					
44	Tire/Wheel	1685-000-00	1685-000-00	1685-000-00	1685-000-00	2
‡	Battery Cable Assembly (9" Black)	N/A	1639-007-90	N/A	1639-007-90	1
‡	Battery Cable Assembly (9" Red)	N/A	3102-107-90	N/A	3102-107-90	1
‡	Battery Cable Assembly (12" Black)	N/A	N/A	3102-104-90	N/A	1
‡	Battery Cable Assembly (30" Red)	N/A	N/A	3102-106-90	N/A	1

(‡) Not Shown

AMT Pump Company
(herein "AMT")
400 Spring Street
Royersford, PA 19468
Phone: (610) 948-3800
Fax: (610) 948-5300
www.amtpump.com

General Information

SALES POLICY: AMT products are sold through our established Distributors. We do not sell direct to the consumer or organization not entitled to trade recognition. Therefore, possession of our catalogs and/or price list(s) does not infer an offer to sell.

MINIMUM ORDER: We appreciate your order, however, all orders are subject to a minimum $35.00 net invoice charge (excluding freight). This applies to all pump and parts purchase orders.

PRICES: Prices are subject to change without notice. All orders accepted are subject to prices in effect at time of shipment.

PAYMENT TERMS: Terms, upon establishment of credit, are Net 30 days. Past due accounts may be subject to a service charge of 1.5% per month. Domestic or assignable letter of credit is required for all export trade.

PAST DUE ACCOUNTS: AMT reserves the right to withhold open account shipments on any past due account. Invoices are considered past due after thirty (30) days. In the interest of sound business, all orders are subject to approval of the Credit Department.

SHIPPING INSTRUCTIONS: All shipments will be made F.O.B. the factory. Where instructions for shipment do not appear on the order, the shipment will be made according to our best judgment. Full risk of loss (including transportation delays and losses) shall pass to the customer upon delivery of the products to the carrier at the F.O.B. point. When loss or delay occurs, primary responsibility for tracing rests with the customer. When there is LOSS or APPARENT VISIBLE DAMAGE to a shipment, when tendered for delivery, *DO NOT* give the carrier a clear receipt. Note such damage on the carrier's delivery receipt and *HAVE THE DRIVER SIGN THE RECEIPT.*

PRODUCT REVISIONS: AMT reserves the right to discontinue, change or improve its products or any portions thereof without being obligated to provide such a change or improvement for units sold and/or shipped prior to such a change or improvement.

LEAD TIME: Products designated "Quick Ship Product", also referred to as "QSP" will normally be shipped within 24 hours of receipt of a non-cancellable purchase order. Only limited quantities of "QSP" pumps are available.

STANDARD LEAD TIME: Lead time is two weeks for all non "QSP" product. AMT reserves the right to revise lead times as required due to availability of materials and all other causes beyond our control.

VIP SHIPMENT: Select AMT and IPT branded pumps are available for next day shipment for non-QSP (Quick Ship Products) items and subjected to a specific model surcharge per unit noted in the respective price book. Requires calling for availability, confirmation and a non-cancellable purchase order or credit card payment prior to shipment. The expedited shipping charges are an additional cost added separately from the VIP charges per item. AMT reserves the right to revise lead times as required due to availability of materials and all other causes beyond our control. QSP quantities are limited as determined by AMT.

ALL purchase orders must be submitted via hard copy sent to AMT customer service department by fax, EDI or e-mail.

RETURN GOODS POLICY: Goods shall not be returned without a return goods authorization number (RGA) issued by AMT customer service. The RGA number must be listed on the packing list. Only current model and part numbers with a valid date code may be returned (within one year from date of purchase). **A 20% restocking and packaging charge will apply to all returns. All shipping charges must be pre-paid. No exceptions.**

ORDER CHANGES BY CUSTOMER: Orders in process may not be changed except with written consent and may be subject to special charges.

12 Month Limited Warranty

EXTENT AND DURATION OF LIMITED WARRANTY

Coverage: AMT Pump Company (herein "AMT") or IPT Pumps by Gorman-Rupp (herein "IPT") or Gorman-Rupp Industries Division of the The Gorman-Rupp Company, Patterson, or the Gorman-Rupp Company (herein referred to as "G-R Unit) each individually warrants that its products and parts shall be free from defects in material and workmanship for twelve (12) months from the date of purchase by the original end user when installation is made and maintenance is performed in accordance with G-R Unit's recommendations. Wear and tear resulting from use and items normally consumed in use are not covered.

EXCEPTIONS

(A) This Limited Warranty shall not apply to mechanical seals in AMT or IPT pumps and the following products and parts: engines, motors, trade accessories and all other products, components, parts and materials not manufactured by the G-R Units. These items may, however, be covered by the warranties of their respective manufacturers. (B) This warranty does not extend to or apply to any unit which has been repaired or altered at any place other than by a G-R Unit, or by persons not expressly approved by a G-R Unit to make repairs or alterations, nor to any unit the serial number, model number or identification of which has been removed, defaced or altered. (C) This warranty does not extend to any product manufactured by a G-R Unit, which has been subjected to mis-use, neglect, accident, improper installation, or use in violation of instructions furnished by a G-R Unit. (D) Pump Kits: This warranty does not extend to any product sold by a G-R Unit unassembled as a Pump Kit. Pump Kits are warranted against defects in material and workmanship for 60 days from the date of shipment from a G-R Unit. Any Pump Kit parts deemed defective by a G-R Unit will be replaced free of charge within 60 days of shipment. Pump Kits are not returnable for credit.

LIMITATIONS

THE G-R UNITS' SOLE AND EXCLUSIVE WARRANTY WITH RESPECT TO THEIR PRODUCTS AND PARTS IS THIS LIMITED WARRANTY. THIS LIMITED WARRANTY IS IN LIEU OF ALL OTHER EXPRESS AND/OR IMPLIED WARRANTIES, INCLUDING IMPLIED WARRANTIES OF MERCHANTABILITY AND FITNESS FOR PARTICULAR PURPOSE.

EXCLUSIVE REMEDY AND DAMAGES

The sole and exclusive remedy for breach of this Warranty by a G-R Unit and the entire extent of its liability for such breach or for damages arising from the use of the products and parts covered under this Limited Warranty, shall be as follows:

1. **Repair or Replacement:** If inspection shows that any G-R Unit product or part covered under this Limited Warranty is defective in materials or workmanship, the G-R Unit shall repair or replace the defective or non-conforming product or part without charge, whichever the G-R Unit chooses. You must have properly maintained and used the product or part claimed to be defective in accordance with the maintenance schedule or manual, which comes with the product. No allowance will be made for labor, installation, removal, transportation or other charges incurred by you in connection with such repair or replacement.
2. To obtain the above remedy:
    A. Immediately notify the G-R Unit upon discovery of the claimed defect in materials or workmanship and provide the serial number or date code of the product and/or part(s) or provide the G-R Unit with the invoice or bill of sale referencing the product by no later than the expiration date of the warranty period.
    B. The G-R Unit will advise whether inspection will be necessary and how whether repair or replacement will be made. If inspection by the G-R Unit is necessary, the pump or defective part must be sent freight pre-paid to the G-R Unit. Return shipment will be F.O.B. the G-R Unit's plant.
    C. **Return Goods Authorization Requirement:** No product will be accepted for return or replacement without the prior written authorization of the G-R Unit. Upon such authorization, and in accordance with instructions from the G-R Unit, the product will be returned to the G-R Unit, shipping charges prepaid by the Buyer.

3. **Damages:** The G-R Unit's liability for damages for breach of this Limited Warranty shall not exceed the amount of the purchase price of the product or part(s) in respect to which Such damages are claimed. **IN NO EVENT SHALL THE G-R UNITS BE LIABLE FOR INCIDENTAL, CONSEQUENTIAL OR SPECIAL DAMAGES FOR BREACH OF THIS LIMITED WARRANTY.**

Some states do not allow the exclusion or limitation of incidental or consequential damages, so the above limitation or exclusion may not apply to you. This Limited Warranty gives you specific legal rights, and you may also have other rights, which vary from state to state.



A Gorman-Rupp Company

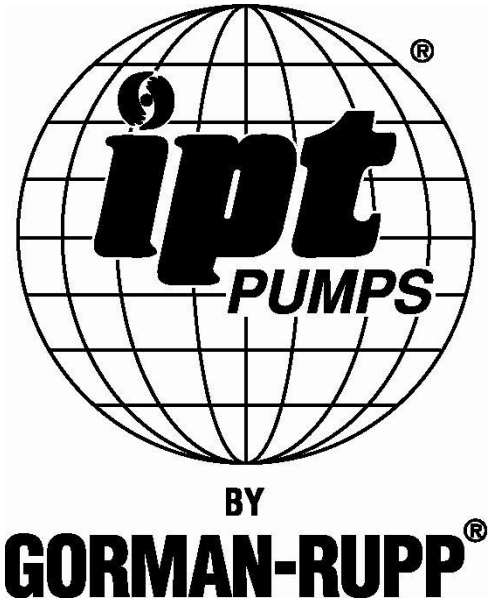

www.amtpump.com