CALL TOLL FREE 877-742-2878 FOR SALES AND SUPPORT Return to BurtProcess.com

Please read and save this Repair Parts Manual. Read this manual and the General Operating Instructions carefully before attempting to assemble, install, operate or maintain the product described. Protect yourself and others by observing all safety information. The Safety Instructions are contained in the General Operating Instructions. Failure to comply with the safety instructions accompanying this product could result in personal injury and/or property damage! Retain instructions for future reference. AMT reserves the right to discontinue any model or change specifications at any time without incurring any obligation.

©2015 AMT Pump Company, A Subsidiary of The Gorman-Rupp Company, All Rights Reserved.

Periodic maintenance and inspection is required on all pumps to ensure proper operation. Unit must be clear of debris and sediment. Inspect for leaks and loose bolts. Failure to do so voids warranty.

High Head Centrifugal Pedestal Pumps

AMT A Gorman-Rupp Company

Refer to pump manual 1808-634-00 for General Operating and Safety Instructions.

DESCRIPTION

These pumps are non self-priming units designed for use where higher heads are required to handle liquid transfer, heating and cooling applications where no suction lift is required. Pump construction features investment cast stainless steel closed impeller. The discharge port on all models can be rotated in 90º increments to accommodate specific applications. All units are for use with non-flammable liquids compatible with pump component materials. Units are suitable for direct coupling or pulley drive. Pump rotation is CCW facing the front of the pump. No motor is supplied with these units.

MAINTENANCE

⚠WARNING

Make certain that the unit is disconnected from the power source before attempting to service or remove any components!

REMOVAL OF OLD SEAL

Should the mechanical seal (Ref. No. 6) require replacement, proceed as follows and refer to Figures No. 1 and 2.

IMPORTANT: Always replace both the seal seat and seal head to ensure proper mating of components! Also, the impeller seal (Ref. No. 9) should be replaced any time the impeller lock nut (Ref. No. 10) has been removed.

1. Remove four bolts (Ref. No. 3) connecting the casing (Ref. No. 11) to the adapter (Ref. No. 4).
2. Remove the casing.

⚠ CAUTION

Care should be taken not to "pinch" or "shave" the O-ring gasket (Ref. No. 5) between the adapter and the casing.

3. Use a box and/or socket wrench to remove the impeller nut (Ref. No.10). Remove the impeller seal (Ref. No. 9) and the impeller (Ref. No. 8).

NOTE: Pump shaft must be held in place to remove impeller. Impeller (Ref. No. 8) and lock nut (Ref. No. 10) unscrew CCW when looking at the front of the pump.

4. The seal head (part of Ref. No. 6) can now be pulled from the shaft. (See Figure 2).
5. Pry the seal seat (part of Ref. No. 6) from the adapter (Ref. No. 4). (See Figure 2).

INSTALLATION OF NEW SEAL

⚠ CAUTION

The precision faces on the mechanical seal are easily damaged. Handle your replacement seal carefully. Do not touch the carbon/ceramic seal faces.

IMPORTANT: Be sure that shaft shoulder does not damage carbon face.

1. Thoroughly clean all surfaces of the seal seat cavity in adapter (Ref. No. 4).
2. Using a clean cloth, wipe the shaft and shaft sleeve to make certain that they are perfectly clean.
3. Wet the rubber portion of the new seal seat (part of Ref. No. 6) with a light coating of soapy water. While wearing clean gloves or using a clean light rag, press seal seat squarely into adapter recess. Place the cardboard washer (usually supplied with new seal) over the polished surface and use a piece of pipe or dowel rod to press in firmly, but gently. Avoid scratching the white ceramic face.

Figure 1 - Mechanical Seal

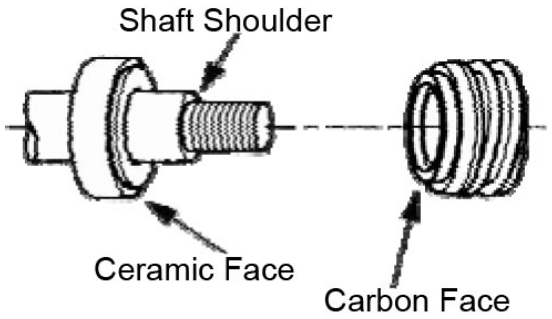

4. Dispose of cardboard washer. Check again to see that ceramic surface is free of dirt and all other foreign particles and that it has not been scratched or damaged.
5. Wet the inside rubber portion of the new seal head 9 part of Ref. No. 6) with a light coating of soapy water. Slide head onto the motor shaft with the sealing surface (Carbon) facing the seal seat (See Figure 1). This completes seal installation.

NOTE: A short "run-in" period may be necessary to provide completely leakproof seal operation.

Rotation (Threaded Shaft Model)

1. Remove pump components from pedestal assembly:
   a. Remove bolts (Ref. No. 3) from casing; remove casing and o-ring (Ref. No. 5).
   b. Remove impeller nut (Ref. No.10), unscrew CCW. Pedestal shaft must be held in place to loosen nut.
   c. Remove impeller o-ring (Ref. No. 9) and impeller (Ref. No. 8) turning CCW while holding pedestal shaft in place. Remove impeller shims (Ref.No. 7).
   d. Replace seal as described in "Removal of Old Seal".
   e. Remove bolts (Ref. No. 13); remove adapter.

Reverse instructions to install pump on repaired pedestal assembly.

⚠ CAUTION

Failure to follow above information may cause impeller to unscrew and damage pump head, cause property damage and/or personal injury.

High Head Centrifugal Pedestal Pumps

PEDESTAL ASSEMBLY MAINTENANCE

⚠WARNING

Disconnect from power source before servicing or inspecting pump for any reason.

Bearing Housing Service

1. Remove shaft bearings (Ref. No. 3) and shaft (Ref. No. 4) as an assembly by first removing snap ring (Ref. No. 6) then wave washer (Ref. No. 5).
2. Push shaft/bearing assembly out of bearing housing (Ref. No. 2) by rapping on pump end of shaft with soft mallet or block of wood and a hammer.
3. Shaft bearings can now be removed from shaft.
4. If shaft bearings have been removed from shaft and bearing housing, replace by sliding bearing or shaft to shoulder.
5. Replace shaft bearing assembly by sliding assembly into housing, pump end first. Push shaft bearing assembly completely in by gently tapping on key way end of shaft with soft mallet.
6. Replace wave washer and snap ring.
7. Reassemble pump to pedestal (See pump manual “Maintenance”)

High Head Centrifugal Pedestal Pumps

For Repair Parts contact dealer where pump was purchased.

Please provide following information:
-Model Number
-Serial Number (if any)

Part description and number as shown in parts list

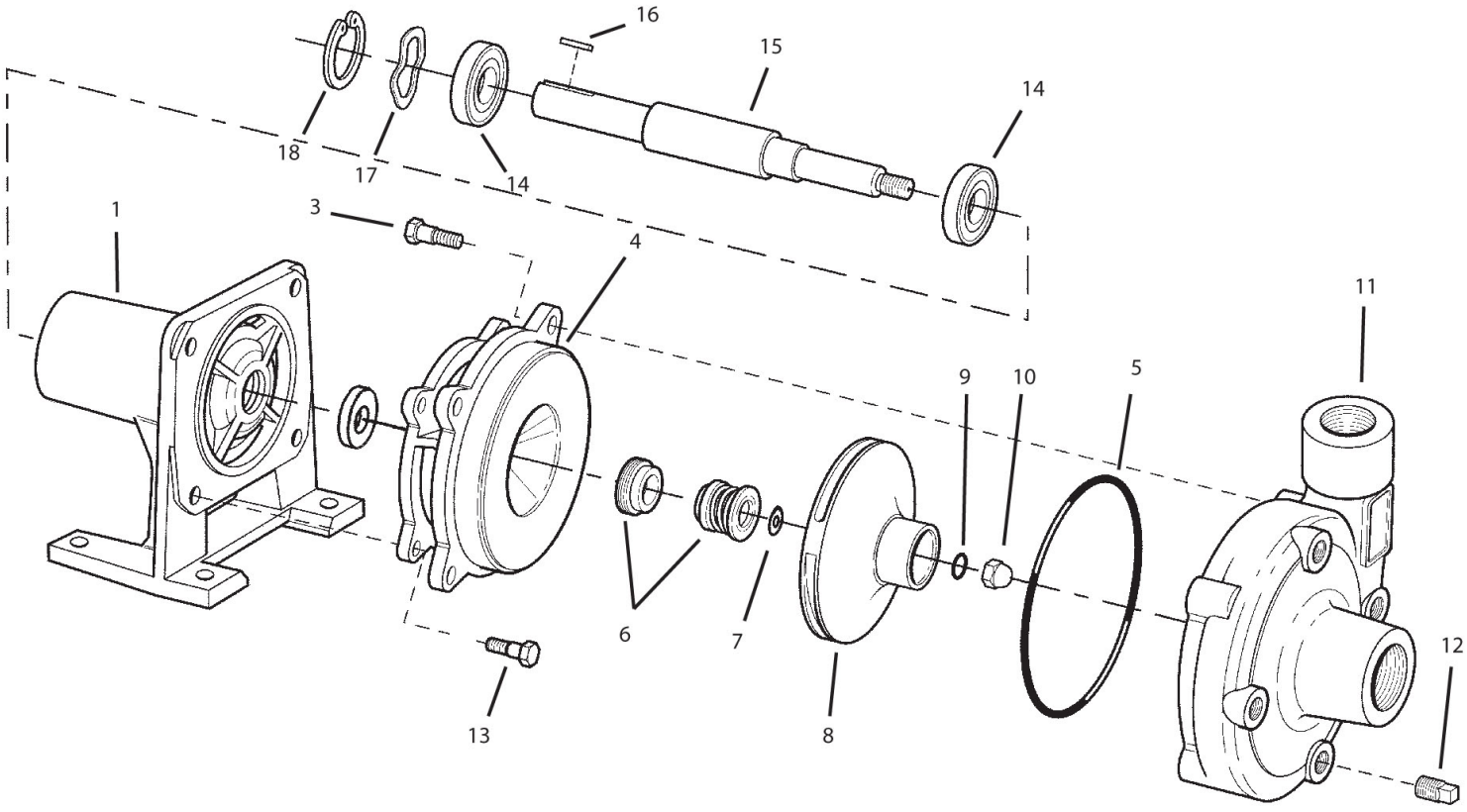

Figure 2 - Repair Parts Illustrations

Repair Parts List

Ref No.	Description	Part Number for Models 4897	4906	4907	Qty
1	Pedestal/Bearing Housing	3890-090-09	3890-090-09	3890-090-09	1
	Pedestal Assembly	3891-999-99	3891-999-99	3891-999-99	1
	(includes Ref. Nos. 1, 14, 15, 16, 17, 18 and 19)				
3	3/8-16 x 1" Hex Head Cap Screw	*	*	*	4
4	Adapter Kit - Cast Iron	4890-030-95	4900-030-95	4900-030-95	1
	Adapter Kit - Bronze	4890-030-97	4900-030-97	4900-030-97	1
	Adapter Kit - Stainless Steel	4890-030-98	4900-030-98	4900-030-98	
	(includes Ref. Nos. 4 and 13)				
5	O-Ring - Buna N	Incl. w/Ref KIT	Incl. w/Ref KIT	Incl. w/Ref KIT	1
	O-Ring - Viton	Incl. w/Ref KIT	Incl. w/Ref KIT	Incl. w/Ref KIT	1
6	Seal Assembly - Buna N	1640-161-96	1640-161-96	1640-161-96	1
	Seal Assembly - Viton	1640-161-97	1640-161-97	1640-161-97	1
7	Impeller Shim Kit	1806-044-90	1806-044-90	1806-044-90	1
8	Impeller Kit	4891-010-98	4901-010-98	4905-010-98	1
	(includes Ref. Nos. 7, 8 and 10)				
9	O-Ring - Buna N	Incl. w/Ref KIT	Incl. w/Ref KIT	Incl. w/Ref KIT	1
	O-Ring - Viton	Incl. w/Ref KIT	Incl. w/Ref KIT	Incl. w/Ref KIT	1
10	7/16-20 Acorn Nut	1784-001-00	1784-001-00	1784-001-00	1
11	Casing Kit - Cast Iron	4890-001-95	4900-001-95	4900-001-95	1
	Casing Kit - Bronze	4890-001-97	4900-001-97	4900-001-97	1
	Casing Kit - Stainless Steel	4890-001-98	4900-001-98	4900-001-97	1
	(includes Ref. Nos. 3, 11 and 12)				
12	3/8" Pipe Plug	*	*	*	1
13	3/8 x 3/4" Hex Head Cap Screw	*	*	*	4
14	Ball Bearing	1695-031-00	1695-031-00	1695-031-00	2
15	Shaft	1696-066-00	1696-066-00	1696-066-00	1
16	Shaft Key	1517-000-00	1517-000-00	1517-000-00	1
17	Wave Washer	1806-023-00	1806-023-00	1806-023-00	1
18	Snap Ring	1695-034-00	1695-034-00	1695-034-00	1
19	▼ Bearing Shim Kit	1696-008-90	1696-008-90	1696-008-90	1
20	1696-075-00 Thread Sealant	1696-075-00	1696-075-00	1696-075-00	1
KIT	O-Ring Kit - Buna N	4890-300-90	4900-300-90	4900-300-90	1
	O-Ring Kit - Viton	4890-301-90	4900-301-90	4900-301-90	1

(*) Standard hardware item, available locally.

▼ Not Shown

NOTES:

NOTES:

AMT Pump Company
(herein "AMT")
400 Spring Street
Royersford, PA 19468
Phone: (610) 948-3800
Fax: (610) 948-5300
www.amtpump.com

General Information

SALES POLICY: AMT products are sold through our established Distributors. We do not sell direct to the consumer or organization not entitled to trade recognition. Therefore, possession of our catalogs and/or price list(s) does not infer an offer to sell.

MINIMUM ORDER: We appreciate your order, however, all orders are subject to a minimum $35.00 net invoice charge (excluding freight). This applies to all pump and parts purchase orders.

PRICES: Prices are subject to change without notice. All orders accepted are subject to prices in effect at time of shipment.

PAYMENT TERMS: Terms, upon establishment of credit, are Net 30 days. Past due accounts may be subject to a service charge of 1.5% per month. Domestic or assignable letter of credit is required for all export trade.

PAST DUE ACCOUNTS: AMT reserves the right to withhold open account shipments on any past due account. Invoices are considered past due after thirty (30) days. In the interest of sound business, all orders are subject to approval of the Credit Department.

SHIPPING INSTRUCTIONS: All shipments will be made F.O.B. the factory. Where instructions for shipment do not appear on the order, the shipment will be made according to our best judgment. Full risk of loss (including transportation delays and losses) shall pass to the customer upon delivery of the products to the carrier at the F.O.B. point. When loss or delay occurs, primary responsibility for tracing rests with the customer. When there is LOSS or APPARENT VISIBLE DAMAGE to a shipment, when tendered for delivery, *DO NOT* give the carrier a clear receipt. Note such damage on the carrier's delivery receipt and *HAVE THE DRIVER SIGN THE RECEIPT.*

PRODUCT REVISIONS: AMT reserves the right to discontinue, change or improve its products or any portions thereof without being obligated to provide such a change or improvement for units sold and/or shipped prior to such a change or improvement.

LEAD TIME: Products designated "Quick Ship Product", also referred to as "QSP" will normally be shipped within 24 hours of receipt of a non-cancellable purchase order. Only limited quantities of "QSP" pumps are available.

STANDARD LEAD TIME: Lead time is two weeks for all non "QSP" product. AMT reserves the right to revise lead times as required due to availability of materials and all other causes beyond our control.

VIP SHIPMENT: Select AMT and IPT branded pumps are available for next day shipment for non-QSP (Quick Ship Products) items and subjected to a specific model surcharge per unit noted in the respective price book. Requires calling for availability, confirmation and a non-cancellable purchase order or credit card payment prior to shipment. The expedited shipping charges are an additional cost added separately from the VIP charges per item. AMT reserves the right to revise lead times as required due to availability of materials and all other causes beyond our control. QSP quantities are limited as determined by AMT.

ALL purchase orders must be submitted via hard copy sent to AMT customer service department by fax, EDI or e-mail.

RETURN GOODS POLICY: Goods shall not be returned without a return goods authorization number (RGA) issued by AMT customer service. The RGA number must be listed on the packing list. Only current model and part numbers with a valid date code may be returned (within one year from date of purchase). **A 20% restocking and packaging charge will apply to all returns. All shipping charges must be pre-paid. No exceptions.**

ORDER CHANGES BY CUSTOMER: Orders in process may not be changed except with written consent and may be subject to special charges.

12 Month Limited Warranty

EXTENT AND DURATION OF LIMITED WARRANTY

Coverage: AMT Pump Company (herein "AMT") or IPT Pumps by Gorman-Rupp (herein "IPT") or Gorman-Rupp Industries Division of the The Gorman-Rupp Company, Patterson, or the Gorman-Rupp Company (herein referred to as "G-R Unit) each individually warrants that its products and parts shall be free from defects in material and workmanship for twelve (12) months from the date of purchase by the original end user when installation is made and maintenance is performed in accordance with G-R Unit's recommendations. Wear and tear resulting from use and items normally consumed in use are not covered.

EXCEPTIONS

(A) This Limited Warranty shall not apply to mechanical seals in AMT or IPT pumps and the following products and parts: engines, motors, trade accessories and all other products, components, parts and materials not manufactured by the G-R Units. These items may, however, be covered by the warranties of their respective manufacturers. (B) This warranty does not extend to or apply to any unit which has been repaired or altered at any place other than by a G-R Unit, or by persons not expressly approved by a G-R Unit to make repairs or alterations, nor to any unit the serial number, model number or identification of which has been removed, defaced or altered. (C) This warranty does not extend to any product manufactured by a G-R Unit, which has been subjected to mis-use, neglect, accident, improper installation, or use in violation of instructions furnished by a G-R Unit. (D) Pump Kits: This warranty does not extend to any product sold by a G-R Unit unassembled as a Pump Kit. Pump Kits are warranted against defects in material and workmanship for 60 days from the date of shipment from a G-R Unit. Any Pump Kit parts deemed defective by a G-R Unit will be replaced free of charge within 60 days of shipment. Pump Kits are not returnable for credit.

LIMITATIONS

THE G-R UNITS' SOLE AND EXCLUSIVE WARRANTY WITH RESPECT TO THEIR PRODUCTS AND PARTS IS THIS LIMITED WARRANTY. THIS LIMITED WARRANTY IS IN LIEU OF ALL OTHER EXPRESS AND/OR IMPLIED WARRANTIES, INCLUDING IMPLIED WARRANTIES OF MERCHANTABILITY AND FITNESS FOR PARTICULAR PURPOSE.

EXCLUSIVE REMEDY AND DAMAGES

The sole and exclusive remedy for breach of this Warranty by a G-R Unit and the entire extent of its liability for such breach or for damages arising from the use of the products and parts covered under this Limited Warranty, shall be as follows:

1. **Repair or Replacement:** If inspection shows that any G-R Unit product or part covered under this Limited Warranty is defective in materials or workmanship, the G-R Unit shall repair or replace the defective or non-conforming product or part without charge, whichever the G-R Unit chooses. You must have properly maintained and used the product or part claimed to be defective in accordance with the maintenance schedule or manual, which comes with the product. No allowance will be made for labor, installation, removal, transportation or other charges incurred by you in connection with such repair or replacement.
2. To obtain the above remedy:
    A. Immediately notify the G-R Unit upon discovery of the claimed defect in materials or workmanship and provide the serial number or date code of the product and/or part(s) or provide the G-R Unit with the invoice or bill of sale referencing the product by no later than the expiration date of the warranty period.
    B. The G-R Unit will advise whether inspection will be necessary and how whether repair or replacement will be made. If inspection by the G-R Unit is necessary, the pump or defective part must be sent freight pre-paid to the G-R Unit. Return shipment will be F.O.B. the G-R Unit's plant.
    C. **Return Goods Authorization Requirement:** No product will be accepted for return or replacement without the prior written authorization of the G-R Unit. Upon such authorization, and in accordance with instructions from the G-R Unit, the product will be returned to the G-R Unit, shipping charges prepaid by the Buyer.

3. **Damages:** The G-R Unit's liability for damages for breach of this Limited Warranty shall not exceed the amount of the purchase price of the product or part(s) in respect to which Such damages are claimed. **IN NO EVENT SHALL THE G-R UNITS BE LIABLE FOR INCIDENTAL, CONSEQUENTIAL OR SPECIAL DAMAGES FOR BREACH OF THIS LIMITED WARRANTY.**

Some states do not allow the exclusion or limitation of incidental or consequential damages, so the above limitation or exclusion may not apply to you. This Limited Warranty gives you specific legal rights, and you may also have other rights, which vary from state to state.



A Gorman-Rupp Company

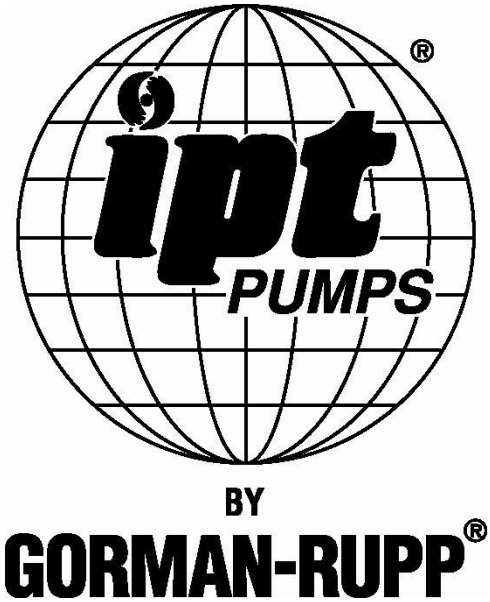

www.amtpump.com