CALL TOLL FREE 877-742-2878 FOR SALES AND SUPPORT
RETURN TO BurtProcess.com

Blue-White®

Operating Manual

FLEXFLO®

Peristaltic Metering Pump



Series A1

NEMA 4X

5300 Business Drive
Huntington Beach, CA 92649
USA

TEL: 714-893-8529
FAX: 714-894-9492

www.blue-white.com
sales@blue-white.com
customerservice@blue-white.com

1.0	**Introduction**	**4**
	1.1 Available Models	4
2.0	**Engineering Specifications**	**5**
3.0	**Materials of Construction**	**6**
	3.1 Wetted Components	6
	3.2 Non-Wetted Components	6
4.0	**Features**	**7**
	4.1 Agency Listings	7
5.0	**Installation**	**8**
	5.1 Mounting Location	8
	5.2 Wall Mounting	9
	5.3 Installing Injection Fitting and Strainer	10
	5.4 Programming FVS (Flow Verification Sensor)	10
6.0	**Touchpad Layout**	**11**
	6.1 IO Connection	12
7.0	**Programming 4-20mA Input**	**14**
8.0	**Power Connections**	**15**
9.0	**Output Adjustment**	**16**
10.0	**Tube Failure Detection (TFD+)**	**16**
	10.1 Confirming Chemical Detection	16
11.0	**Pump Maintenance**	**17**
	11.1 Routine Inspection and Maintenance	17
	11.2 Cleaning and Lubricating the Pump	17
12.0	**Tube Replacement**	**18**
	12.1 Provided Tool	18
	12.2 Tube Removal	18
	12.3 Tube Installation	20
13.0	**Firmware Update**	**22**
14.0	**Replacement Parts List**	**24**
	14.1 Exploded View	25
15.0	**Accessories**	**26**
16.0	**Troubleshooting**	**28**
17.0	**Warranty**	**29**
APPENDIX A: ACRONYMS		**30**
APPENDIX B: MODEL NUMBER MATRIX		**31**

READ THE OPERATING MANUAL PRIOR TO INSTALLATION AND USE.

1.0 INTRODUCTION

Congratulations on purchasing Blue-White's FLEXFLO® Series A1 peristaltic metering pump (a peristaltic metering pump is a type of positive displacement pump used for pumping a variety of fluids).

The FLEXFLO® Series A1 peristaltic metering pump is pre-configured for the tubing that is shipped with it.

NOTE: It is recommended that the pump have a one-hour break-in period before calibrating the new tube.

NOTE: The tubing has an identification number printed on the tube for easy re-ordering.

NOTE: The pump was pressure-tested at the factory with clean water before it was shipped, so there may be trace amounts of clean water in the pre-installed tube assembly. This is part of Blue-White's stringent quality assurance process.

1.1 Available Models

Tube Model	Feed Rate		Maximum Pressure PSI (bar)	Maximum Temperature °F (°C)
	GPH	LPH		
A1-1*	0.001 - 1.09	0.002 - 4.13	65 (4.50)	130 (54)
A1-3*	0.003 - 5.60	0.011 - 21.2	50 (3.45)	130 (54)
A1-6*	0.001 - 1.35	0.003 - 5.14	100 (6.89)	185 (85)
A1-7*	0.002 - 4.17	0.008 - 15.8	50 (3.45)	185 (85)
A1-8*	0.002 - 3.09	0.006 - 11.7	50 (3.45)	130 (54)

NOTES:
*Data pertains to both "T" and "M" connection types for A1F and A1V Models

2.0 ENGINEERING SPECIFICATIONS

Maximum Working Pressure (Excluding pump tubes)[1]	100 PSI (6.89 bar)
Maximum Fluid Temperature	185°F (85°C)
Maximum Viscosity	5000 centipoise
Maximum Suction Lift	30 ft. of water at sea level (14.7 atm psi)
Ambient Operating Temperature	14°F to 125°F (-10°C to 52°C)
Ambient Storage Temperature	-40°F to 158°F (-40°C to 70°C)
Operating Voltage	115V60Hz 1 PH (0.6A max.) 220V50Hz 1 PH (0.3A max.) 230V60Hz 1 PH (0.3A max.) 230V50Hz 1 PH (0.3A max.) 240V50Hz 1 PH (0.3A max.)
Power Cord Options	115V60Hz = NEMA 5/15 (USA) 230V60Hz = NEMA 6/15 (USA) 220V50Hz = CEE 7/VII (EU) 240V50Hz = AS 3112 (Australia/New Zealand) 230V50Hz = BS 1363/A (UK)
Motor	Brushless DC, 50W.
Duty Cycle	Continuous
Motor Speed Adjustment Range	2,000:1 (0.5% - 100%) Max rpm = 65 rpm
Enclosure	NEMA 4X (IP66), Valox® (PBT) & PA12
Maximum Overall Dimensions	7.25” W x 9” H x 10” D (18.5 W x 22.9 H x 25.2 D cm)
Product Weight	6 lb. (2.7 Kg)
Approximate Shipping Weight	13 lb. (5.9 Kg)
Approximate Shipping Dimensions	10.5” W x 13.75” H x 11” D (26.7 W x 35 H x 28 D cm)

3.0 MATERIALS OF CONSTRUCTION

3.1 Wetted Components

Pump Tube Assembly	
Tubing	Flex-A-Prene®, Flex-A-Thane®, Flex-A-Chem®
Adapter Fittings	PVDF
Injection / Back-Flow Check Valve	
Body & Insert	PVDF
Check Ball	Ceramic
Spring	Hastelloy C-276
Ball Seat O-Ring	TFE/P
Static Seal O-Ring	FKM
Ancillary Items Provided	
Suction Tubing	3/8” OD x 1/4” ID x 5’ Clear PVC
Discharge Tubing	3/8” OD x 1/4” ID x 5’ Polyethylene (LLDPE)
Suction Strainer	Polypropylene
Weight	Ceramic

3.2 Non-Wetted Components

Enclosure	Valox® (PBT) & PA12
Pump Head	Valox® (PBT)
Pump Head Cover	Polycarbonate Permanently lubricated sealed motor shaft support ball bearing.
Cover Screws	Stainless steel, polypropylene cap
Roller Assembly	
Rotor	Valox® (PBT)
Rollers	Nylon
Roller Bearings	Bronze
TFD System Sensor	Polysulfone (PES)
Power Cord	3 conductor, SJTW-A water-resistant
Tube Installation Tool	GF nylon
Mounting Brackets and Hardware	316 stainless steel screws GF nylon bracket

4.0 FEATURES

- Tube Failure Detection (TFD+) senses tube failure and shuts off the pump. No false triggering.
- Heavy duty display shield protects pump controls.
- Remote Start/Stop, which is one non-powered dry contact closure.
- Compatible with Blue-White's output Flow Verification Sensor (FVS) system.
- Relay outputs include a single 250V/3A and a single solid state.
- Self-priming (even against maximum line pressure), which means no required bypass valves, and it cannot vapor lock or lose prime.
- SCADA Inputs include: 4-20mA

4.1 Agency Listings

This pump is ETL listed to conforms to the following: UL Standard 778 as a motor operated water pump. CSA Standard C22.2 as process control equipment.

This pump complies to the Machinery Directive 2006/42/EC, Low Voltage Directive 2014/35/EU, EN 60335-2-41, EMC Directive 2014/30/EU & EN 55014-1, EN 55014-2.

Symbol	Description
	Warning (Risk of electric shock)
	Caution (Refer to the user's guide)
	Ground, Protective Conductor Terminal

ENCLOSURE RATING

NEMA 4X Constructed for either indoor or outdoor use to provide a degree of protection to personnel against incidental contact with enclosed equipment; to provide a degree of protection against falling dirt, rain, sleet, snow, windblown dust, splashing water, and hose-directed water; and that will be undamaged by external formation of ice on enclosure.

IP66 No ingress of dust; complete protection against contact. Water projected in powerful jets against enclosure from any direction shall have no harmful effects.

5.0 INSTALLATION

CAUTION The pump should be serviced by qualified persons only. If equipment is used in a manner not specified in this manual, the protection provided by the equipment may be impaired.

CAUTION Risk of chemical overdose. Be certain pump does not overdose chemical during backwash and periods of no flow in circulation system.

CAUTION Always wear protective clothing, face shield, safety glasses and gloves when working on or near your metering pump. Additional precautions should be taken depending on solution being pumped. Refer to MSDS precautions from your solution supplier.

CAUTION All diagrams are strictly for guideline purposes only. Always consult an expert before installing metering pump on specialized systems. Metering pump should be serviced by qualified persons only.

CAUTION Be sure that installation does not constitute a cross connection with drinking water supply. Check your local plumbing codes.

CAUTION The pump should be supplied by an isolating transformer or RCD (operating current less or equal 30 mA).

5.1 Mounting Location

1. Choose an area located near the chemical supply tank, chemical injection point, and electrical supply. Also, choose an area where the pump can be easily serviced.

2. Finding a secure surface and using the provided mounting hardware, mount the pump close to the injection point. Keep the inlet (suction) and outlet (discharge) tubing as short as possible. Longer discharge tubing increases back pressure at pump head.

NOTE: Mounting the pump lower than the chemical container will gravity-feed chemical into it. This “flooded suction” installation will reduce output error due to increased suction lift. A shut-off valve, pinch-clamp, or other means to halt gravity-feed to the pump must be installed during servicing.

NOTE: Install a back flow prevention check valve at the discharge side of the pump to prevent the system fluid from flowing back through pump during tube replacement or during tube rupture.

NOTE: It is recommended to have a pressure relief valve at the discharge side of the of pump to prevent premature wear and damage to the pump tube, in the event that the discharge line becomes blocked.

NOTE: The pump does not require back pressure. Keep the discharge pressure as low as possible to maximize the tube life.

5.2 Wall Mounting

1. Using the provided #10 self-tapping screws, mount the bracket to a secure wall that is located where it can be easily serviced.

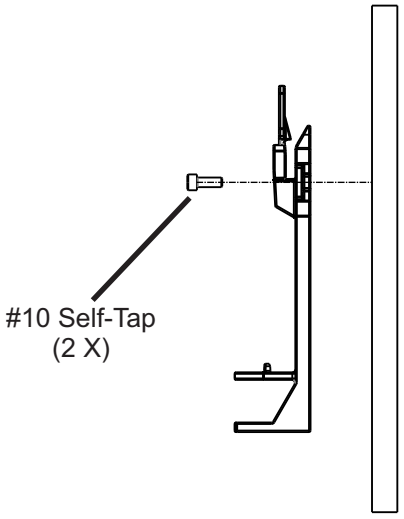

Wall Mount Bracket (Side View)

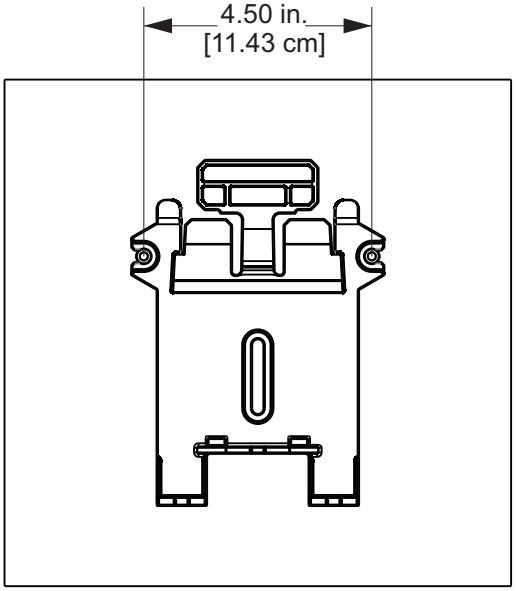

Mounted Pump (Front View)

2. Lower the pump so that the tab on the wall mount is inserted into the slot located on the back of the pump. The pump will now be secured to the wall mount bracket.

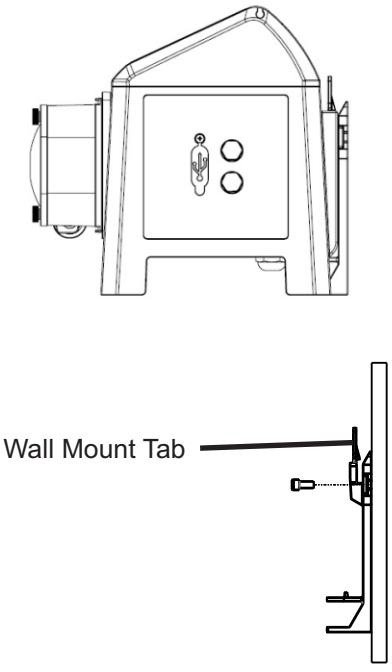

Wall Mount (Side View)

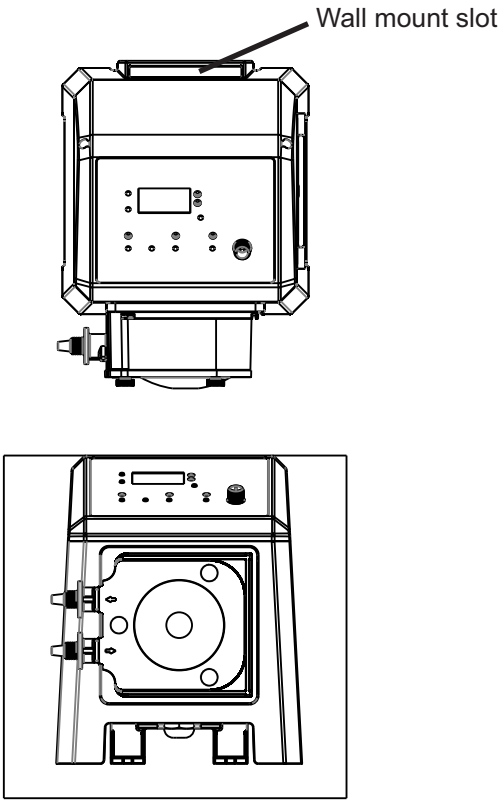

Mounted Pump

5.3 Installing Injection Fitting and Strainer

CAUTION

Proper eye and skin protection must be worn when installing and servicing the pump.

Assemble the injection fitting and strainer per the figures below.

NOTE: Install upward for best results.

NOTE: The injection nose may be trimmed (removed) when injecting into a small pipe.

INJECTION FITTING AND STRAINER FOR 1/4" (0.64 CM) I.D. CONNECTION END MODELS

Discharge Injection Fitting / Check Valve

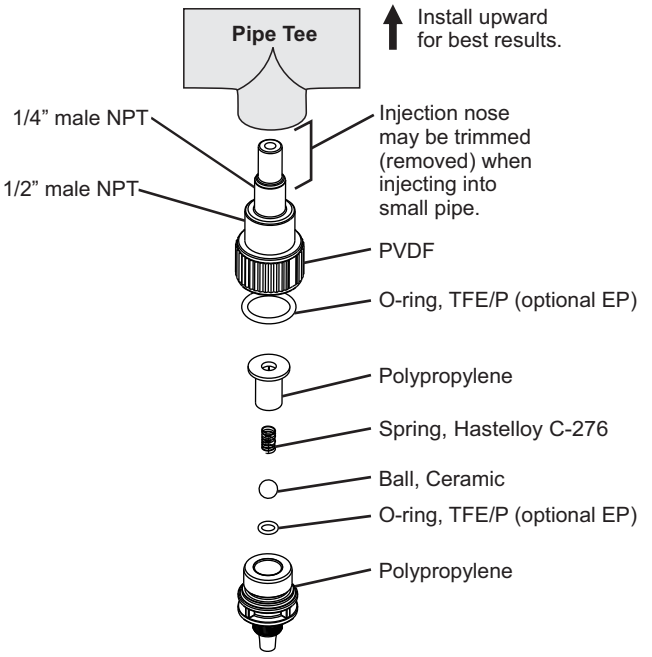

Suction Tubing and Strainer

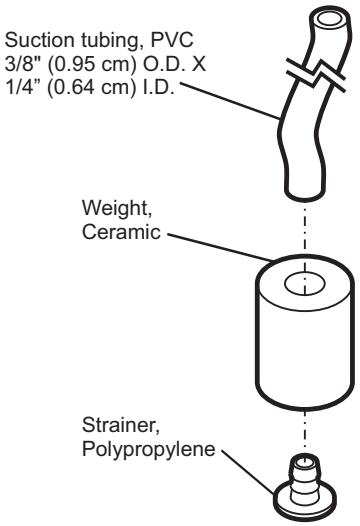

5.4 Programming FVS (Flow Verification Sensor)

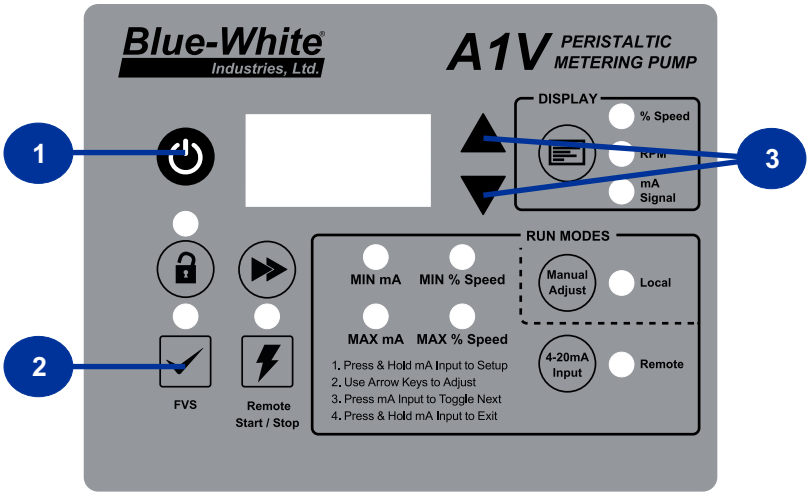

Directions	
1	Confirm that pump is in the OFF position
2	Press and hold FVS button
3	Toggle up/down arrow until desired trigger time is shown (seconds)
4	Press and hold FVS button to set

NOTE: Alarm Delay Time range 1-20 seconds

6.0 TOUCHPAD LAYOUT

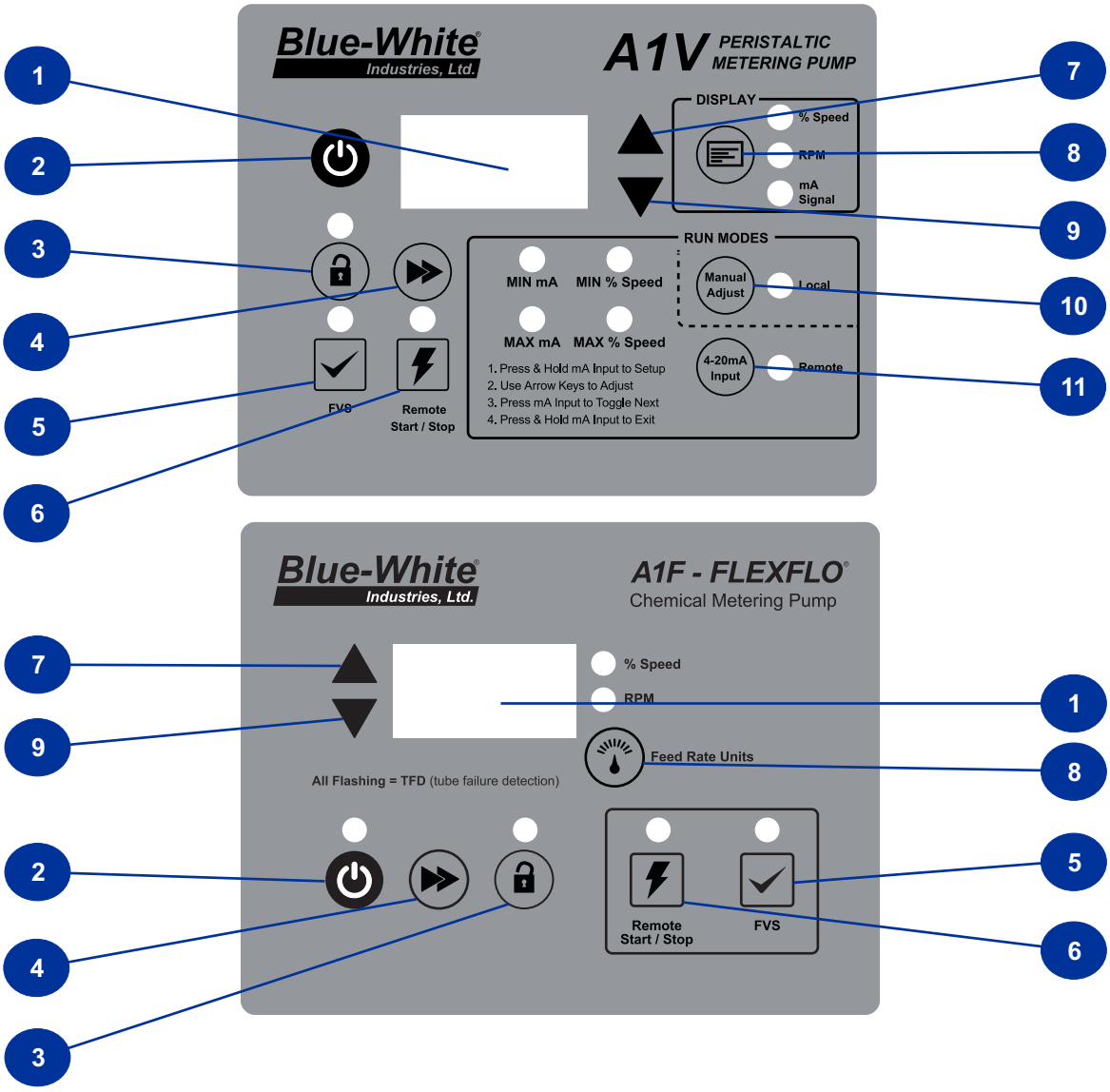

Item Number	Item
1	LED/LCD Readout
2	Start & Stop Key
3	Lock-Out Key
4	Prime Key
5	Flow Verification Sensor (FVS) Key
6	Remote Start/Stop Key
7	Up Key
8	Rate Display Key
9	Down Key
10	Manual Speed Adjust
11	4-20mA

6.1 IO Connection

WARNING

Risk of electric shock - All wiring must be insulated and rated 60V minimum.

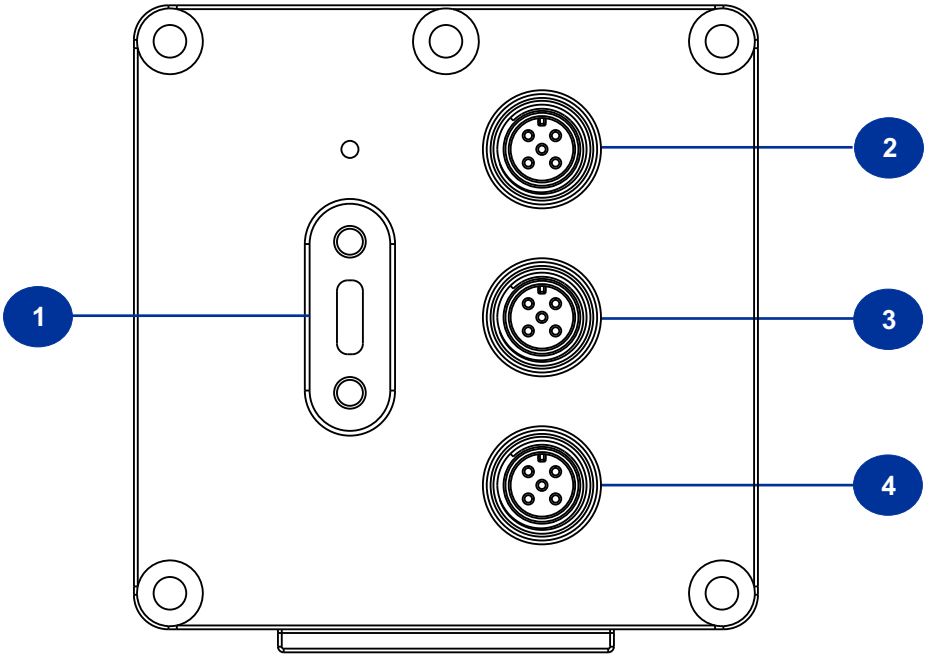

Pump (Right Side Panel)

Item Number	Item
1	USB-C Connector
2	M12 Input Connector 1 (Included with A1V ONLY)
3	M12 Input Connector 2
4	M12 Output Connector

M12 connectors not included with product.

Blue-White Industries requires any A-Type M12 connector with 5 position female sockets

6.2 M12 Connector

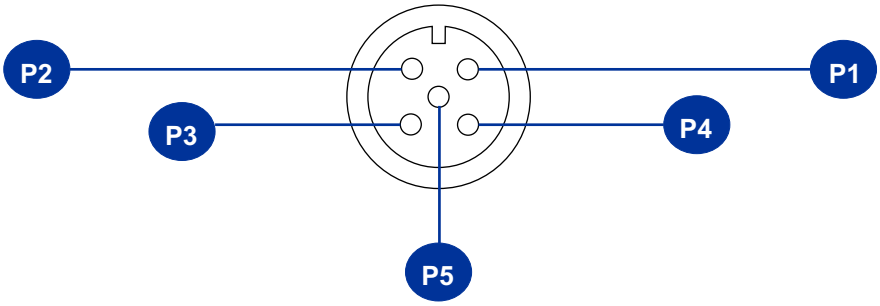

M12 Input Connector 1- Included with A1V ONLY

PIN	Function	Specifications	Reference
P1	4-20mA Input (+)	120 Ohm Impedance, Non powered loop	(+) Positive
P2	4-20mA Input (-)	120 Ohm Impedance, Non powered loop	(-) Negative
P3		Not Used	
P4		Not Used	
P5		Not Used	

M12 Input Connector 2

PIN	Function	Specifications	Reference
P1	Remote Start / Stop	N.O. Dry Contact Closure	Open = Stop Gnd = Run
P2	Ground	DC Ground	0 VDC
P3	FVS (+)	15 VDC @ 60 mA	To power FVS sensor
P4	FVS (-)	DC Ground (0 VDC)	FVS Ground Input
P5	FVS (Signal)	Input Signal	Input for FVS Signal

M12 Output Connector

PIN	Function	Specifications
P1	Motor On Out (+)	SS(+) Contact Out Solid State
P2	Motor On Out (-)	SS(-) Contact Out Solid State
P3	N.O.	Relay Out, N.O. Contact 3 Amp @ 250 VAC
P4	COM	Relay Out, COM Contact
P5	N.C.	Relay Out, N.C. Contact

7.0 4-20mA Input

CAUTION

Proper eye and skin protection must be worn when installing and servicing the pump.

7.1 Selecting 4-20mA input mode

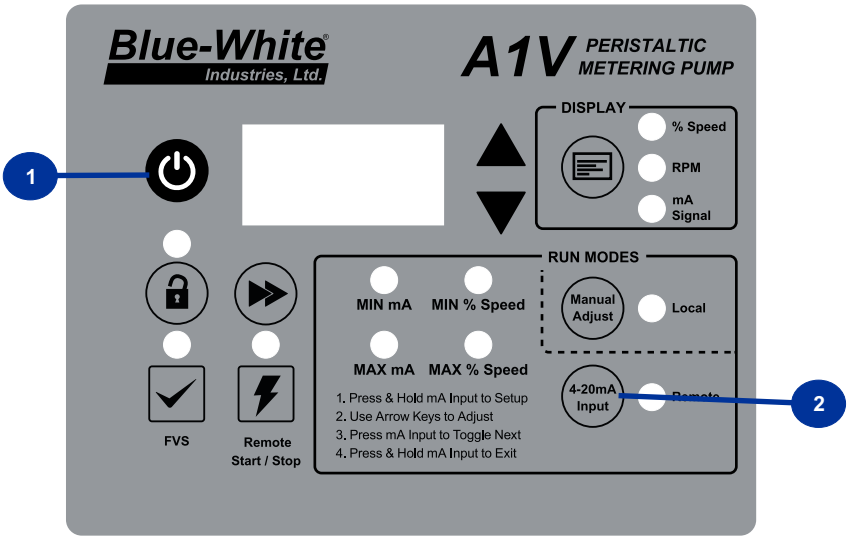

	Directions
1	Confirm that pump is in the OFF position
2	Press 4-20mA Input button

7.2 Programming 4-20mA input mode

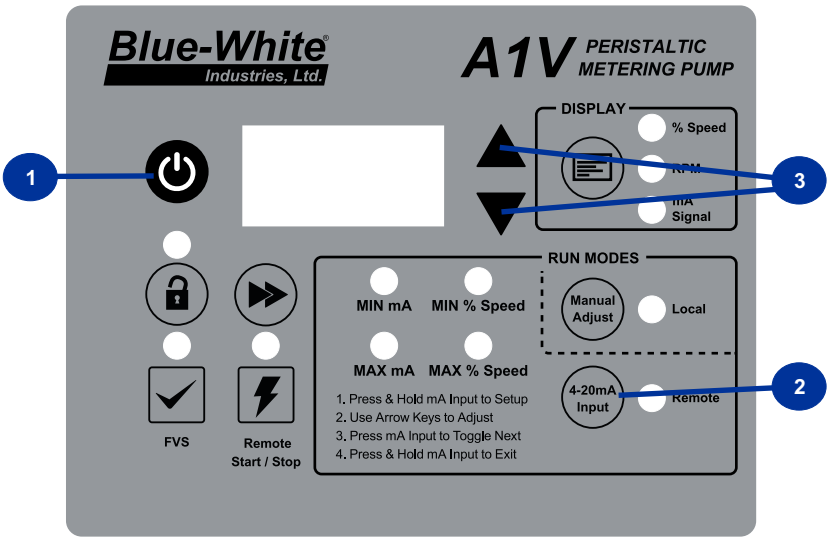

	Directions
1	Confirm that pump is in the OFF position.
2	Press and hold 4-20mA Input button.
3	MIN mA light will illuminate. Use arrow keys to toggle min mA value for the pump to operate at
4	Press 4-20mA Input button for MIN % Speed light to illuminate
5	Use arrow keys to toggle MIN % Speed value for the pump to operate.
6	Press 4-20mA Input button for MAX mA light to illuminate.
7	Use arrow keys to toggle MAX mA value for the pump to operate.
8	Press 4-20mA Input button for MAX % Speed light to illuminate.
9	Use arrow keys to toggle MAX % Speed value for the pump to operate.
10	Press and hold 4-20mA Input button to exit programming mode.

8.0 POWER CONNECTIONS



Risk of electric shock – cord connected models are supplied with a grounding conductor and grounding-type attachment plug. To reduce risk of electric shock, be certain that it is connected only to a properly grounded, grounding-type receptacle.



Electrical connections and grounding (earthing) must conform to local wiring codes.



Ensure to connect the pump to the proper supply voltage. Using the incorrect voltage will damage the pump and may result in injury. The voltage requirements is printed on the pump serial label.

- Use the voltage for which the power cord is rated.
- Do not strap together control (input/output) cables and power cables.
- When there is a power interruption, the pump, which has an auto-restart feature, will restore the pump to the operating state it was in when the power was lost.
- POWER: 115V60Hz (0.6A max.), 220V50Hz (0.3A max.), 230V60Hz (0.3A max.), 230V50Hz (0.3A max.), 240V50Hz (0.3A max.)

NOTE: Contact a licensed electrician when there is doubt regarding the electrical installation.

9.0 OUTPUT ADJUSTMENT

The speed of the pumping mechanism is adjustable from 0.5 to 100 % motor speed (0.03 RPM to 65 RPM).

10.0 TUBE FAILURE DETECTION (TFD+)

The pump is equipped with a Enhanced Tube Failure Detection (TFD+) system, which is designed to stop the pump and provide an output alarm in the event the pump tube should rupture, and a chemical enters the pump head.

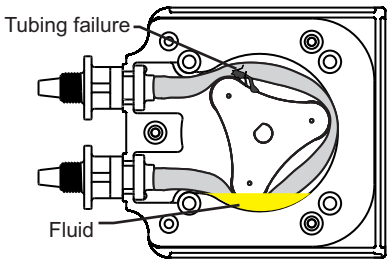

This TFD+ system can detect the presence of many chemicals, including sodium hypochlorite (chlorine), hydrochloric (muriatic) acid, sodium hydroxide, oils based polymers, water based polyers, and many others. The system will not be triggered by water (rain, condensation, etc.) or silicone oil (roller lubricant).

NOTE: If the system has detected a chemical, the pump tube must be replaced, and the pump head and roller assembly must be thoroughly cleaned. Failure to clean the roller assembly will void the warranty.

NOTE: If the TFD+ alarm is triggered, the pump will stop, and close an alarm output.

10.1 Confirming Chemical Detection

To determine if a chemical will be detected by the system:

1. Remove the pump head cover, and the pump tube and roller assembly.
2. Place a small amount of chemical in the bottom of the pump head that is enough to cover the sensors.
3. Reinstall **only** the pump head cover.
4. Turn on the pump by pressing the START button.

   NOTE: If the TFD+ system **detects** a chemical, the pump will stop after a two-second confirmation period.

   NOTE: If the TFD+ system **does not detect** a chemical, the pump will continue to operate after the confirmation period.
5. Carefully clean the chemical out of the pump head. Ensure to remove all the chemical traces from the sensor probes.
6. Reinstall the roller assembly and tubing.
7. Reinstall the pump head cover.
8. Press the START button to clear the alarm condition.
9. Restart the pump.

11.0 PUMP MAINTENANCE

CAUTION

Always wear protective clothing, face shield, safety glasses and gloves when working on or near your metering pump. Additional precautions should be taken depending on the solution being pumped. Refer to MSDS precautions from your solution supplier.

11.1 Routine Inspection and Maintenance

The pump requires minimal maintenance. However, the pump and all the accessories should be checked weekly, especially when pumping chemicals. Inspect all the components for signs of leaking, swelling, cracking, discoloration, or corrosion. Immediately replace worn out or damaged components.

Cracking, crazing, or discoloration during the first week of operation are signs of a severe chemical attack. If this occurs, perform the following steps:

1. Immediately remove the chemical from the pump.
2. Determine which parts are being attacked.
3. Replace the damaged parts with parts that have been manufactured using more suitable materials.
4. After servicing, operate the pump to verify normal operation.

NOTE: The manufacturer does not assume responsibility for damage to a pump that has been caused by a chemical attack.

11.2 Cleaning and Lubricating the Pump

- The pump will require occasional cleaning, and it will depend on the severity of service.
- When changing the pump tube assembly, the pump head chamber, the roller assembly, and the pump head cover should be wiped of any dirt and debris.
- Clean the motor shaft with a clean towel, and then apply a small amount of grease to the shaft. This will help prevent the rotor from sticking to the motor shaft.
- Periodically, or when necessary, grease the pump head cover bearing. Apply a small amount of grease (Aeroshell aviation grease #5 or equivalent).
- 100% silicone lubrication may be used on the roller assembly.
- Periodically clean the injection fitting /check valve assembly, especially since injecting fluids, like sodium hypochlorite, can calcify. These lime deposits and other buildups can clog the fitting, increase back pressure, and interfere with the check valve operation.
- Periodically clean the suction strainer.

12.0 TUBE REPLACEMENT

CAUTION

Prior to service, pump clean water through the pump and suction / discharge line to remove any chemical.

CAUTION

Always wear protective clothing, face shield, safety glasses and gloves when working on or near your metering pump. Additional precautions should be taken depending on solution being pumped. Refer to MSDS precautions from your solution supplier.

CAUTION

Use the provided Tube Installation Tool to leverage tubing into the pump head. **Do not use your fingers.**

CAUTION

Use extreme caution when replacing the pump tube. **Do not place your fingers near the rollers.**

The pump tube assembly will eventually become non-operational if it is not regularly inspected and replaced. The tube life is affected by many factors, such as the type of chemical being pumped, the amount of back pressure, the motor revolutions per minute (RPM), and temperature.

12.1 Provided Tool



Tube Installation Tool
90002-278

12.2 Tube Removal

CAUTION

Safety first. **Remove the pressure**. Relieve (remove) the system pressure on the discharge and suction side of the pump. Failure to do so will cause the solution to squirt when disconnecting the tube connections.

1. Disconnect the system plumbing from the pump tube adapters.
2. Press the Start/Stop key to stop the pump.
3. Remove the three black thumb screws from the front of the pump head cover by unscrewing counterclockwise. Remove the pump head cover by pulling straight out.



4. **Set the motor speed to 10%.** Press the Start/Stop key to start the pump.

5. With the pump running, pull the inlet (suction) fitting out of the pump head. Guide the tube counterclockwise away from the rollers. Pull the outlet (discharge)fitting out of the pump head.



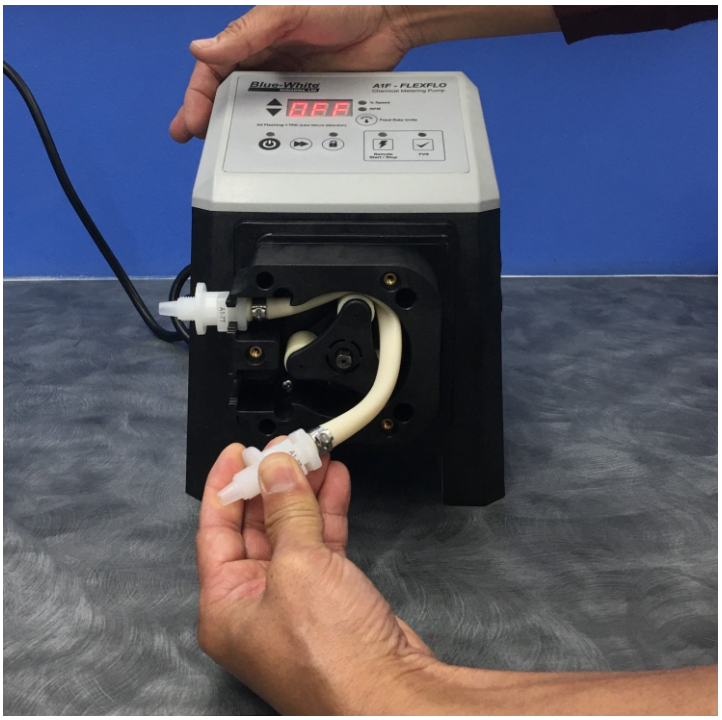

6. Press the Start/Stop key to stop the pump.

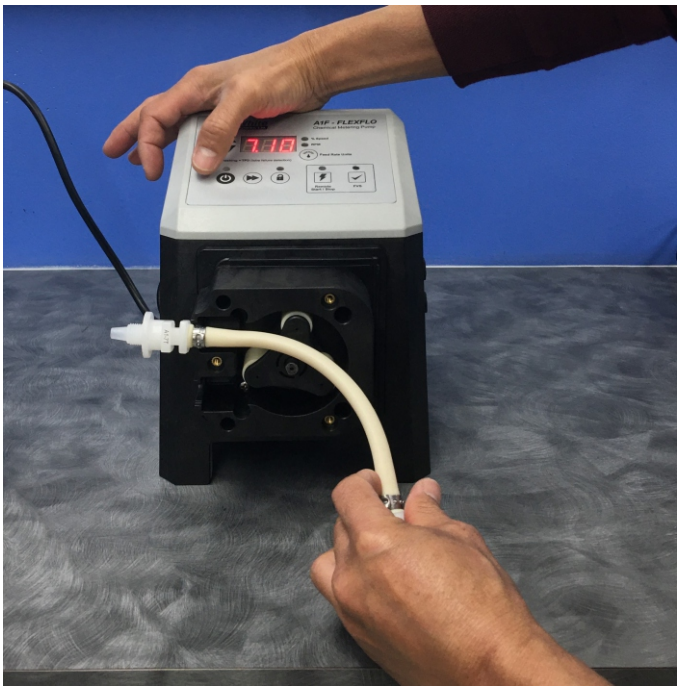

12.3 Tube Installation

NOTE: Thoroughly clean the pump head and rotor. The rotor can be removed by pulling it straight out. After cleaning, push the rotor back on the shaft.

1. **Set the motor speed to 10%.** Press the Start/Stop key to start the pump.

2. Insert the inlet (suction) side of the pump tube fitting into the lower retaining slot of the pump head. Carefully guide the pump tube into the pump head.



3. Stretch the tube slightly and insert the outlet (discharge) fitting into the upper retaining slot of the pump head. Pull the outlet fitting out of the pump head.

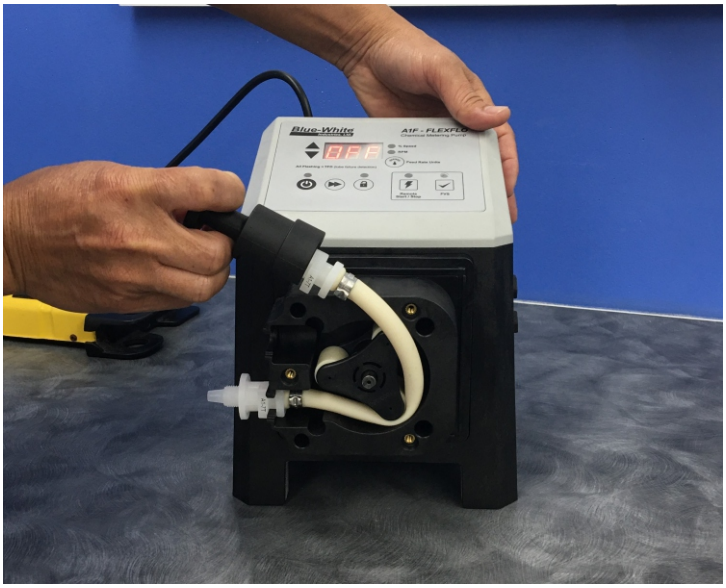

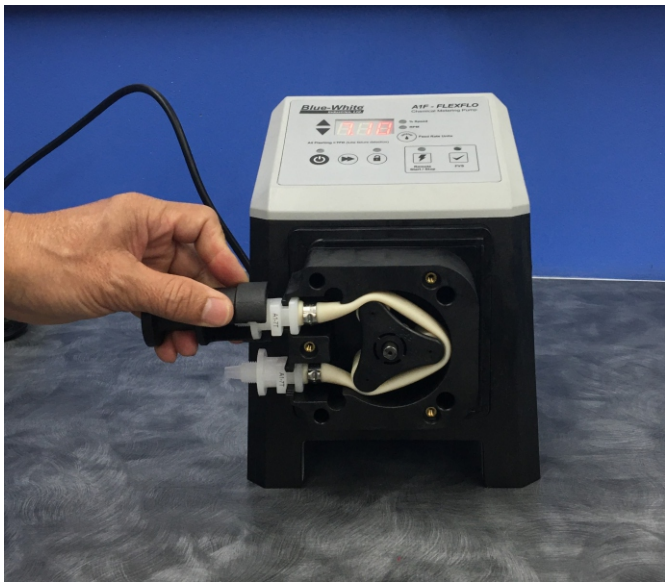

4. Place the clear cover onto the pump head. Secure the cover with the provided three thumb screws. The pump is now ready for operation.



13.0 Updating The Firmware

REQUIREMENTS: Download & Install the A1 Progammer file by visiting the Firmware Update section of the A1 product page at www.blue-white.com as well as download the Firmware Update File.

1. Connect the Pump to a computer via USB-A / USB-C cable
2. Power up the Pump
3. Open the A1 programer program
4. Select “Enable” USB in the Communication settings window
5. Click on Connect

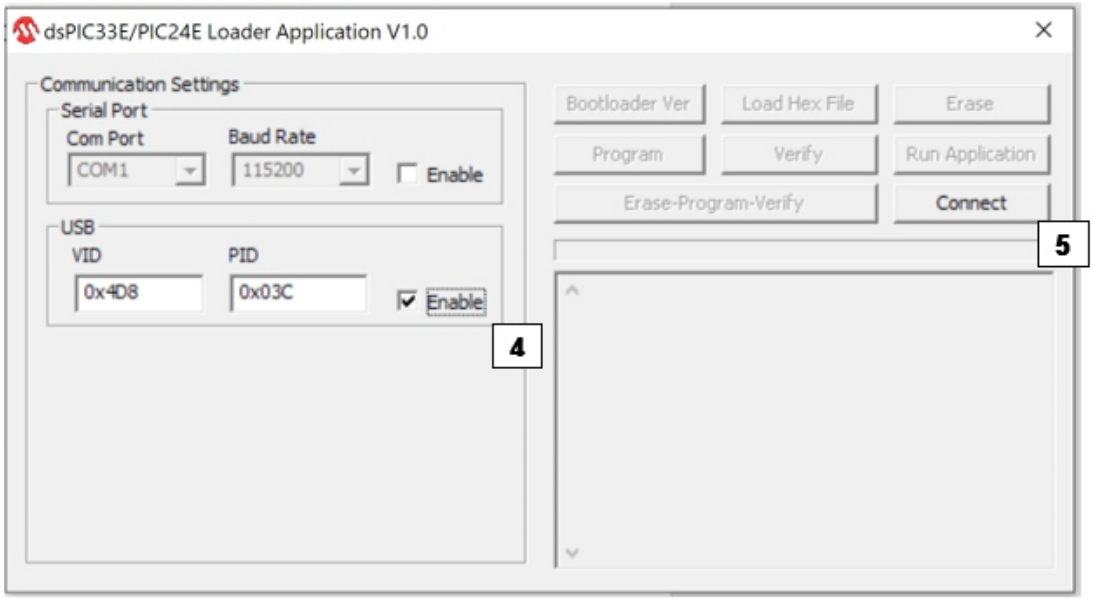

6. Select “Load Hex File”

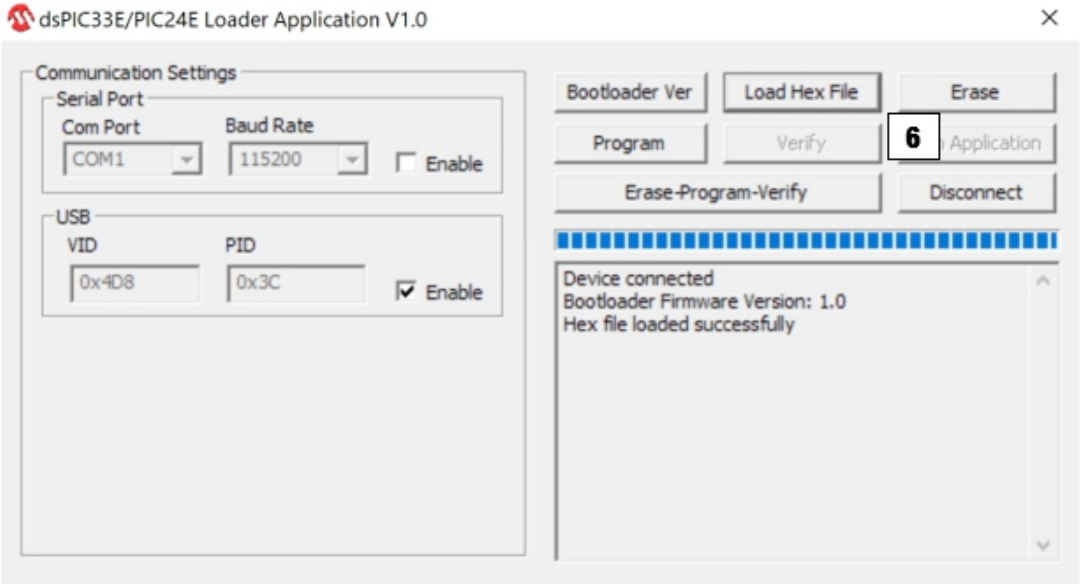

7. Select ".HEX" file

A1F-F05.hex

A1V-F05.hex

8. Click on "Erase-Program-Verify"

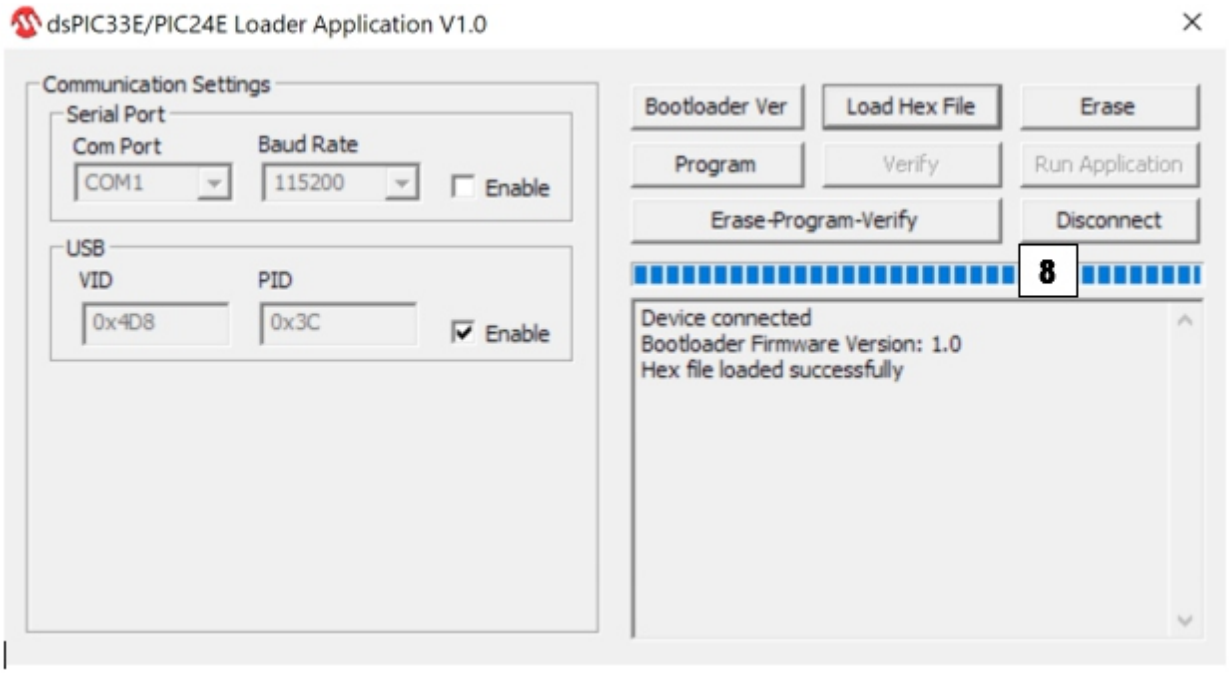

9. Once Hex file is loaded successfully
10. Click on "Disconnect". Your firmware has now been updated.

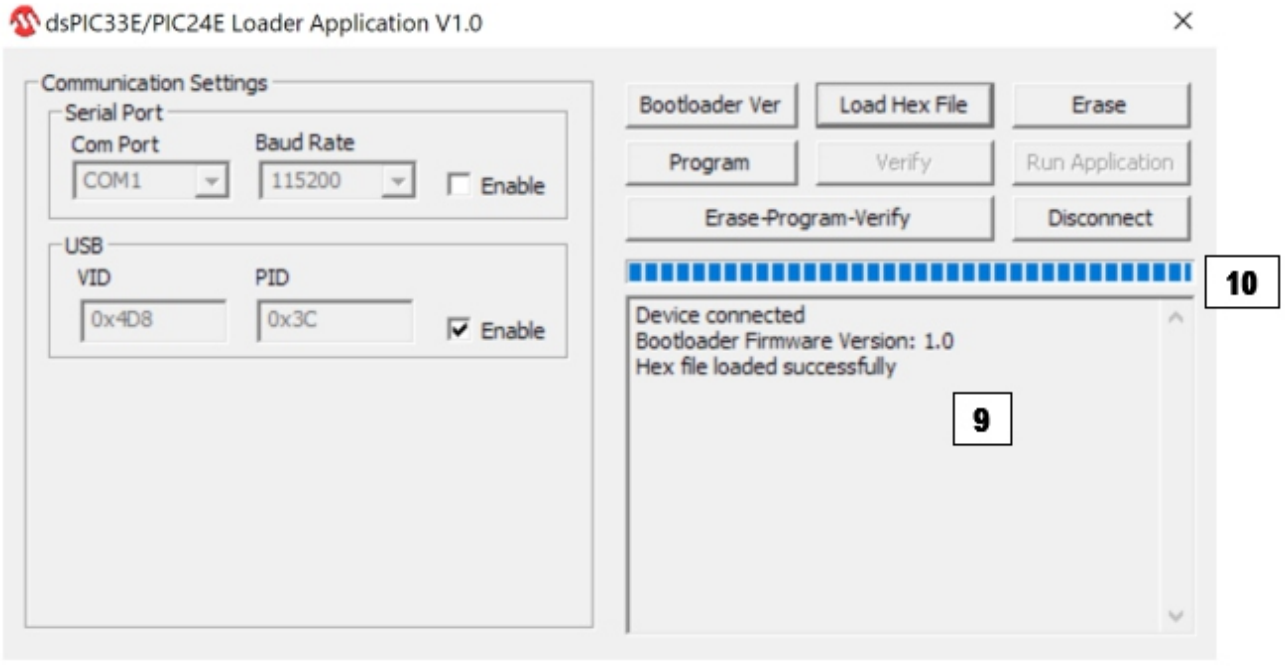

14.0 REPLACEMENT PARTS LIST

Item	Description	Part	Quantity
1	Spacer, back	90011-014	1
2	Roller assembly complete (rotor) A1-1T, A1-3T, A1-7T	71000-350	1
	Roller assembly complete (rotor) A1-6T	71000-159	
	Roller assembly complete (rotor) A1-8T	71000-255	
3	Tube assembly, 3/8” OD tube compression, Flex-A-Thane® Tube assembly, 3/8” OD tube compression, Flex-A-Thane® Tube assembly, 3/8” OD tube compression, Flex-A-Prene® Tube assembly, 3/8” OD tube compression, Flex-A-Prene® Tube assembly, 3/8” OD tube compression, Flex-A-Chem®	A1-1T A1-3T A1-6T A1-7T A1-8T	2
4	Pump head cover, Acrylic	90002-185	1
5	Thumb screw with 9/64” key drive, maximum torque 6-8 in. lbs.	90011-160	3
6	Tube nut, compression, for 3/8” tubing	C-330-6	2
7	Cover A1 Polycarbonate (not pictured)	90002-684	1

14.1 EXPLODED VIEW

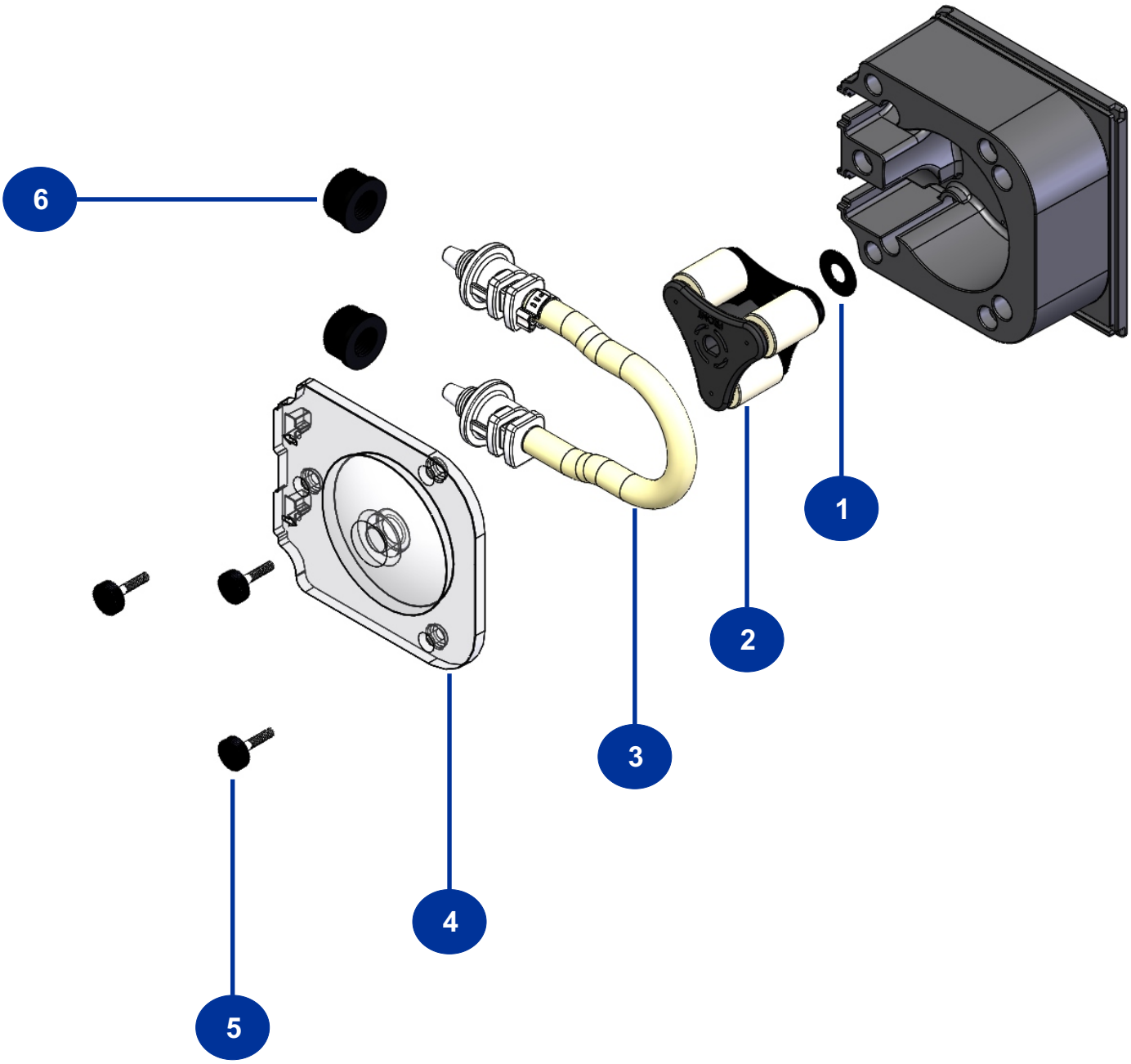

15.0 ACCESSORIES

The following accessories are available for the A1 FLEXFLO® Peristaltic Metering Pump. Please visit Blue-white.com for more information. All accessories are sold separately.



KIT-M12
TWO M12 CABLES

KIT-M12

Kit contains: Two M12 cables.

KIT-M12 WIRING INSTRUCTIONS		
DIAGRAM	PIN #	WIRE COLOR
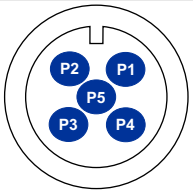	PIN 1	BROWN
	PIN 2	WHITE
	PIN 3	BLUE
	PIN 4	BLACK
	PIN 5	GRAY

NOTE: THIS DIAGRAM IS FOR THE PUMP'S M-12 PORT



KIT-M12-3
THREE M12 CABLES

KIT-M12-3

Kit contains: Three M12 cables.

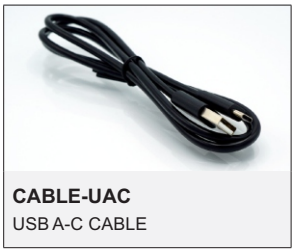

CABLE-UAC
USB A-C CABLE

CABLE-UAC

Kit contains: One 3' USB-A to USB-C cable.

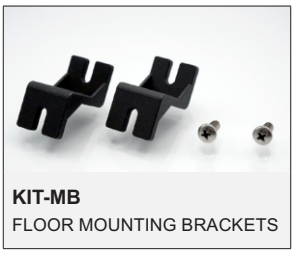

KIT-MB
FLOOR MOUNTING BRACKETS

KIT-MB

Kit contains: Two floor mounting brackets and Two screws

NOTE: All Accessories are sold separately



KIT-S07
STAR III 7 GALLON TANK

KIT-S7

Kit contains: One 7 gallon tank, One 3/8” suction tube, One 3/8” discharge tube, One foot valve and strainer and One mounting bracket with screws



KIT-S15
STAR III 15 GALLON TANK

KIT-S15

Kit contains: One 15 gallon tank, One 3/8” suction tube, One 3/8” discharge tube, One foot valve and strainer and One mounting bracket with screws



KIT-S30
STAR III 30 GALLON TANK

KIT-S30

Kit contains: One 30 gallon tank, One 3/8” suction tube, One 3/8” discharge tube, One foot valve and strainer and One mounting bracket with screws

16.0 TROUBLESHOOTING

Error Code	Explanation	Troubleshooting
E01	Motor Over Current	Check that tube is installed correctly
E02	Over Voltage	Check power supply output voltage
E03	Under Voltage	Check power supply output voltage
E04	Temperature exceeds 75°C at control	Check ambient conditions, restart pump once cooled to ambient temperature
E05	Inverter Error	Contact Blue-White (714) 893-8529 techsupport@blue-white.com
E06	No Motor Connection	Contact Blue-White (714) 893-8529 techsupport@blue-white.com
E08	Motor Stall	Check that tube is properly installed
E10	Capacitor bank charging error	Contact Blue-White (714) 893-8529 techsupport@blue-white.com
E17	Communication error at display	Contact Blue-White (714) 893-8529 techsupport@blue-white.com

17.0 WARRANTY

17.1 LIMITED WARRANTY

Your new FLEXFLO pump is a quality product and is warrantied for 36 months from date of purchase (proof of purchase is required). The pump will be repaired or replaced at our discretion. Failure must have occurred due to defect in material or workmanship and not as a result of operation of the product other than in normal operation as defined in the pump manual. Warranty status is determined by the pump's serial label and the sales invoice or receipt. The serial label must be on the pump and legible. The warranty status of the pump will be verified by Blue-White or a factory authorized service center.

Pump Head and roller assembly is warrantied against damage from chemical attack when proper TFD+ (Tube Failure Detection) system instructions and maintenance procedures are followed.

17.2 WHAT IS NOT COVERED

- Pump Tube Assemblies and rubber components – They are perishable and require periodic replacement.
- Pump removal, or re-installation, and any related labor charge.
- Freight to the factory, or a certified service center.
- Pumps that have been tampered with, or in pieces.
- Damage to the pump that results from misuse, carelessness such as chemical spills on the enclosure, abuse, lack of maintenance, or alteration which is out of our control.
- Pumps damaged by faulty wiring, power surges or acts of nature.

17.3 PROCEDURE FOR IN WARRANTY REPAIR

Contact the factory to obtain a RMA (Return Material Authorization) number. Carefully pack the pump to be repaired. It is recommended to include foot strainer and injection/check valve fitting since these devices may be clogged and part of the problem. Please enclose a brief description of the problem as well as the original invoice or sales receipt, or copy showing the date of purchase. Prepay all shipping costs. COD shipments will not be accepted. Warranty service must be performed by the factory or an authorized service center. Damage caused by improper packaging is the responsibility of the sender. When In-Warranty repair or replacement is completed, the factory pays for return shipping to the dealer or customer.

17.4 PRODUCT USE WARNING

Blue-White products are manufactured to meet the highest quality standards in the industry. Each product instruction manual includes a description of the associated product warranty and provides the user with important safety information. Purchasers, installers, and operators of Blue-White products should take the time to inform themselves about the safe operation of these products. In addition, Customers are expected to do their own due diligence regarding which products and materials are best suited for their intended applications. Blue-White is pleased to assist in this effort but does not guarantee the suitability of any particular product for any specific application as Blue-White does not have the same degree of familiarity with the application that the customer/end user has. While Blue-White will honor all of its product warranties according to their terms and conditions, Blue-White shall only be obligated to repair or replace its defective parts or products in accordance with the associated product warranties. **BLUE-WHITE SHALL NOT BE LIABLE EITHER IN TORT OR IN CONTRACT FOR ANY LOSS OR DAMAGE WHETHER DIRECT, INDIRECT, INCIDENTAL, OR CONSEQUENTIAL, ARISING OUT OF OR RELATED TO THE FAILURE OF ANY OF ITS PARTS OR PRODUCTS OR OF THEIR NONSUITABILITY FOR A GIVEN PURPOSE OR APPLICATION.**

17.5 CHEMICAL RESISTANCE WARNING

Blue-White offers a wide variety of wetted parts. Purchasers, installers, and operators of Blue-White products must be well informed and aware of the precautions to be taken when injecting or measuring various chemicals, especially those considered to be irritants, contaminants or hazardous. Customers are expected to do their own due diligence regarding which products and materials are best suited for their applications, particularly as it may relate to the potential effects of certain chemicals on Blue-White products and the potential for adverse chemical interactions. Blue-White tests its products with water only. The chemical resistance information included in this instruction manual was supplied to Blue-White by reputable sources, but Blue-White is not able to vouch for the accuracy or completeness thereof. While Blue-White will honor all of its product warranties according to their terms and conditions, Blue-White shall only be obligated to repair or replace its defective parts or products in accordance with the associated product warranties. **BLUE-WHITE SHALL NOT BE LIABLE EITHER IN TORT OR IN CONTRACT FOR ANY LOSS OR DAMAGE, WHETHER DIRECT, INDIRECT, INCIDENTAL, OR CONSEQUENTIAL, ARISING OUT OF OR RELATED TO THE USE OF CHEMICALS IN CONNECTION WITH ANY BLUE-WHITE PRODUCTS.**

APPENDIX A: ACRONYMS

°C	Celsius
°F	Fahrenheit
AC	Alternating current
bar	Unit of pressure
CIP	Clean-in-place
cm	Centimeters
COD	Cash on Delivery
D	Depth
DC	Direct current
EEE	Electrical and electronic equipment
EP	Ethylene propylene
ETL	Electrical Testing Labs/Intertek
EU	European Union
FDA	Food and Drug Administration
FKM	Fluoroelastomer
FVS	Flow Verification Sensor
GF	Glass fiber
GPD	Gallons per day
GPH	Gallons per hour
H	Height
Hz	Hertz
ID	Inside diameter
IO	Input/Output
Kg	Kilogram
lb.	Pound
LLDPE	Linear low-density polyethylene
LPH	Liters per hour
mA	Milliampere
min	Minute
mL	Milliliters
MSDS	Material Safety Data Sheet
N.C.	Normally Close
N.O.	Normally Open
NPT	National Pipe Thread
NSF	National Sanitation Foundation
OD	Outside diameter
P.N.	Part Number
PBT	Polybutylene Terephthalate
PE	Polyethylene
PSI	Pounds per Square Inch
PVC	Polyvinyl chloride
PVDF	Polyvinylidene fluoride
RCD	Residual-current device
Rev.	Revision
RMA	Return Material Authorization
RPM	Revolutions per minute
SIP	Steam-in-place
SS	Solid state
TFD+	Enhanced Tube Failure Detection
TFE/P	Tetrafluoroethylene propylene
UL	Underwriters Laboratories
US	United States
V	Volt
W	Watt
W	Width
WEEE	Waste Electrical and Electronic Equipment

Model Number Matrix

FLEXFLO® Model Number

A1	FLEXFLO® Peristaltic Metering Pump

Series

F	Standard Control Methods (Manual, Remote, FVS)
V	4-20mA Input, In Addition to Standard Control Methods (Manual, Remote, FVS)

Power Cord (Operating voltage requirement 96VAC to 264VAC)

4	115V 50/60Hz, power cord NEMA 5/15 plug (US)	**8**	240V 50/60Hz, power cord AS 3112 plug (AU/New Zealand)
5	230V 50/60Hz, power cord NEMA 6/15 plug (US)	**9**	230V 50/60Hz, power cord BS 1363/A plug (UK)
6	220V 50/60Hz, power cord CEE 7/V11 plug (EU)		

Pump Tube Size and Material

1	1/4” OD Flex-A-Thane®
3	7/16” OD Flex-A-Thane®
6	3/8” OD Flex-A-Prene®
7	7/16” OD Flex-A-Prene®
8	7/16” OD Flex-A-Chem®

Inlet/Outlet Connection Size, Connection Type

T	3/8" OD x 1/4" Tube Compression Fitting
M	1/2" Male NPT Fitting

A1	**F**	**4**	**-**	**6**	**T**	**Sample Model Number**

Accessories



KIT-S07
STAR III 7 GALLON TANK



KIT-S15
STAR III 15 GALLON TANK



KIT-S30
STAR III 30 GALLON TANK



KIT-MB
FLOOR MOUNTING BRACKETS



CABLE-UAC
USB A-C CABLE



KIT-M12
TWO M12 CABLES

NOTE: Accessories sold separately.

*KIT-M12-3 THREE M12 CABLES



Users of electrical and electronic equipment (EEE) with the WEEE marking per Annex IV of the WEEE Directive must not dispose of end of life EEE as unsorted municipal waste, but use the collection framework available to them for the return, recycle, recovery of WEEE and minimize any potential effects of EEE on the environment and human health due to the presence of hazardous substances. The WEEE marking applies only to countries within the European Union (EU) and Norway. Appliances are labeled in accordance with European Directive 2002/96/EC.

Contact your local waste recovery agency for a *Designated Collection Facility* in your area.

Blue-White®

5300 Business Drive
Huntington Beach, CA 92649
USA

TEL: 714-893-8529
FAX: 714-894-9492

www.blue-white.com
customerservice@blue-white.com

P.N. 80000-609

Rev 0.9 20210622