CALL TOLL FREE 877-742-2878 FOR SALES AND SUPPORT ®
RETURN TO BurtProcess.com

Blue-White®

Operating Manual

FLEXFLO®

Peristaltic Metering Pump



Series A2A

TFD system Tube Failure Detection

NSF Certified to NSF/ANSI Standard 50

ETL C US

CE

NEMA 4X

5300 Business Drive
Huntington Beach, CA 92649
USA

TEL: 714-893-8529
FAX: 714-894-9492

www.blue-white.com
sales@blue-white.com
customerservice@blue-white.com

1.0	**Introduction**	**4**
	1.1 Available Models	4
2.0	**Specifications**	**5**
	2.1 Materials of Construction	5
3.0	**Features**	**6**
	3.1 Agency Listings	6
4.0	**Installation**	**7**
	4.1 Mounting Location	7
	4.2 Dimensions	7
	4.3 Installing Injection Fitting and Strainer	8
5.0	**Power Connections**	**9**
	5.1 Wiring Terminal and I/O Schematics	10
6.0	**How to Operate Flex-Pro - Control Pad**	**11**
7.0	**Set Remote Start / Stop**	**12**
	7.1 Set FVS (flow verification system)	13
8.0	**Manual Operation**	**15**
9.0	**Pump Tube Timer**	**16**
10.0	**TFD (Tube Failure Detection)**	**16**
11.0	**Alarm Relay**	**17**
12.0	**Reverse Rotation**	**17**
13.0	**Tube Replacement**	**18**
	13.1 Tube Removal	18
	13.2 Tube Installation	19
14.0	Pump Maintenance	20
15.0	**Replacement Parts**	**21**
16.0	**Warranty**	**22**
APPENDIX B: NUMBER MATRIX		**23**

READ THE OPERATING MANUAL PRIOR TO INSTALLATION AND USE.

1.0 Introduction

Congratulations on purchasing the FlexFlo® A2A variable speed peristaltic metering pump. A peristaltic pump is a type of positive displacement pump used for pumping a variety of fluids.

The FlexFlo® pump is pre-configured for tubing that shipped with your metering pump. Tubing assembly has an Identification number printed on the tube for easy re-order, such as NEE, NGG, etc.

NOTE: Your new pump has been pressure tested at factory with clean water before shipping. You may notice trace amounts of clean water in pre-installed tube assembly. This is part of our stringent quality assurance program at Blue-White.

1.1 Available Models

Feed Rate			Max Speed	Max Pressure	Max Temperature	A2P Model Numbers		
Flex-A-Prene® A2A Tube Pumps								
Meets FDA criteria for food | Excellent chemical resistance | CIP | SIP								
GPH	**LPH**	**ML/Min**	**RPM**	**PSI (bar)**	**F (C)**	**115V AC**	**230V AC**	**220V AC**
.055 - 5.5	.208 - 20.8	3.47 - 347	130	50 (3.4)	185 (85)	A2A24-*NEE	A2A25-*NEE	A2A26-*NEE
.16 - 15.9	.60 - 60.2	10.03 - 1003	130	40 (2.8)	185 (85)	A2A24-*NGG	A2A25-*NGG	A2A26-*NGG

* Inlet/outlet connection type
S = 3/8" OD x 1/4" ID tubing compressions type connections
M = 1/2" male NPT

NOTE: For optimum tube life, specify the pump to operate at the lowest possible RPM and pressure.

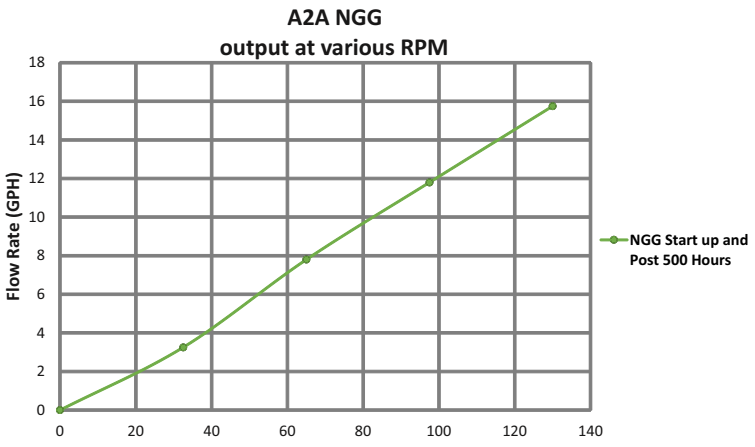

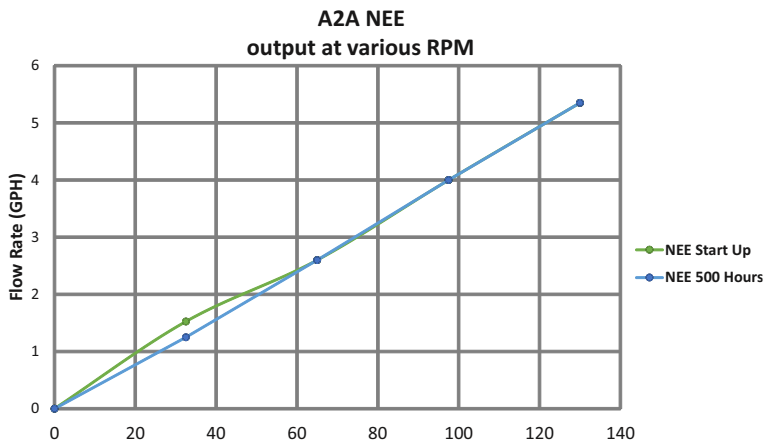

NOTE: It is recommended that the pump be allowed a one hour break-in period before calibrating the new tube.

Optional Extended Brackets

Stainless steel extended brackets allow the pump to be securely mounted to most surfaces (floor, shelf, or skid). Brackets lift the pump up 4-1/2 inches (11.43 cm), for easy pump access in hard to reach areas.

- Raise metering pump 4-1/2 inches (11.43 cm) off the ground or surface.
- Made out of tough Stainless Steel.
- Provides a stable mounting surface.

Model #	Description
72000-380	Extended Mounting Bracket, 1 Pair, SS, 4 SS Screws



2.0 Engineering Specifications

Maximum Working Pressure (Excluding pump tubes):
50 psig (3.4 bar)

NOTE: See the individual pump tube assembly maximum pressure ratings.

Maximum Suction Lift:
30 ft. of water at sea level (14.7 atm psi)

Ambient Operating Temperature:
14°F to 125°F (-10°C to 52°C)

Ambient Storage Temperature:
-40°F to 158°F (-40°C to 70°C)

Operating Voltage:
115VAC/50/60Hz, 1ph (1.5 Amp Maximum)
230VAC/50/60Hz, 1ph (0.7 Amp Maximum)
220VAC/50/60Hz, 1ph (1.0 Amp Maximum)
240VAC/50/60Hz, 1ph (1.0 Amp Maximum)

Power Cord Options:
115V50/60Hz = NEMA 5/15 (USA)
230V50/60Hz = NEMA 6/15 (USA)
220V50/60Hz = CEE 7/VII (EU)
240V50/60Hz = AS 3112 (Australia/New Zealand)

Motor:
Brushed DC, 1/8 H.P.

Duty Cycle:
Continuous

Motor Speed Adjustment Range 100:1:
1.0% - 100% motor speed (1.3 to 130 RPM)

Enclosure:
NEMA 4X (IP66), Polyester powder coated aluminum.

Maximum Overall Dimensions:
7-1/2" W x 10-1/4" H x 14" D (19 W x 26 H x 35.6 D cm)

Product Weight:
28.4 lb. (12.9 Kg)

Approximate Shipping Weight:
35 lb. (15.9 Kg)

2.1 Materials of Construction

Wetted Components:

Pump Tube Assembly:
Tubing:.....Flex-A-Prene®
Adapter Fittings: PVDF

NOTE: This is model specific, and two are provided.

Injection / Back-Flow Check Valve:
Body & insert: .....PVDF
Check Ball: .....Ceramic
Spring: .....Hastelloy C-276
Ball Seat O-Ring:.....FKM (optional EPDM)
Static Seal O-Ring:.....FKM (optional EPDM)

Ancillary Items Provided:
Suction Tubing:.....3/8" OD x 1/4" ID x 10' Clear PVC

Discharge Tubing: .....3/8" OD x 1/4" ID x 10' Polyethylene (LLDPE)
Suction Strainer: .....PVDF

Suction Strainer:
Body:.....PVDF
Check Ball: .....Ceramic
Ball Seat O-Ring:.....TFE/P (Optional EPDM)

With "M" Tubing M/NPT Connections Only:
Suction Strainer:
Body:.....PVDF
Check Ball: .....Ceramic
Ball Seat O-Ring:.....TFE/P (Optional EPDM)

Non-Wetted Components:

Enclosure:
413 Aluminum (Polyester powder coated)

Pump Head:
Valox® (PBT) thermoplastic

Pump Head Cover:
Polycarbonate for added strength and chemical resistance. Permanently lubricated sealed motor shaft support ball bearing.

Cover Screws:
Stainless steel

Roller Assembly:
Rotor:.....Valox® (PBT)
Rollers: .....PVDF
Roller Bearings: .....SS Ball Bearings

Motor Shaft:
Chrome plated steel

TFD System Sensor Pins:
Hastelloy C-276

Power Cord:
3 conductor, SJTW-A water-resistant

Tube Installation Tool:
GF nylon

Mounting Brackets and Hardware:
316 stainless steel

3.0 Features

- Peristaltic pump design does not have valves that can clog requiring maintenance.
- Self priming - even against maximum line pressure. By-pass valves are not required. Cannot vapor lock or lose prime.
- Variable speed DC motor.
- Rated for continuous duty (24X7).
- Specially engineered tubing for long life at high pressures. Meets FDA 21 CFR requirements for food contact applications.
- Patented Tube Failure Detection (TFD) system. Senses tube failure by detecting chemical in pump head.
- Molded squeeze rollers and molded alignment rollers for optimum squeeze, unparalleled accuracy, and tube life.
- Heavy duty rotor - single piece plastic rotor means no flexing and increased accuracy with no metal springs or hinges to corrode.
- Inject at maximum pressure in either direction (clockwise and counter clockwise).
- Compatible with Blue-White's output Flow Verification Sensor (FVS) system.

3.1 Agency Listings

This pump is ETL listed to conforms to the following: UL Standard 1081 as a motor operated water pump. CSA Standard C22.2 as process control equipment

This pump complies to the Machinery Directive 2006/42/EC, Low Voltage Directive 2014/35/EU, EN 60335-2-41, EMC Directive 2014/30/EU & EN 55014-1, EN 55014-2.

This pump is certified to NSF/ANSI Standard 50 - Equipment for Swimming Pools, Spas, Hot Tubs, and Other Recreational Water Facilities.

Symbol	Explanation
	WARNING (Risk of electric shock)
	CAUTION (Refer to the users' guide)
	GROUND, PROTECTIVE CONDUCTOR TERMINAL

Enclosure Rating:

NEMA 4X: Constructed for either indoor or outdoor use to provide a degree of protection to personnel against incidental contact with enclosed equipment; to provide a degree of protection against falling dirt, rain, sleet, snow, windblown dust, splashing water, and hose-directed water; and that will be undamaged by external formation of ice on enclosure.

IP66: No ingress of dust; complete protection against contact. Water projected in powerful jets against enclosure from any direction shall have no harmful effects.

4.0 Installation

CAUTION ⚠	Risk of chemical overdose. Be certain pump does not overdose chemical during backwash and periods of no flow in circulation system.
CAUTION ⚠	Always wear protective clothing, face shield, safety glasses and gloves when working on or near your metering pump. Additional precautions should be taken depending on solution being pumped. Refer to MSDS precautions from your solution supplier.
CAUTION ⚠	All diagrams are strictly for guideline purposes only. Always consult an expert before installing metering pump on specialized systems. Metering pump should be serviced by qualified persons only.
CAUTION ⚠	Be sure that installation does not constitute a cross connection with drinking water supply. Check your local plumbing codes.

4.1 Mounting Location

1. Choose an area located near the chemical supply tank, chemical injection point, and electrical supply. Also, choose an area where the pump can be easily serviced.

2. Finding a secure surface and using the provided 316SS mounting bracket, mount the pump close to the injection point. Keep the inlet (suction) and outlet (discharge) tubing as short as possible.

NOTE: Mounting the pump lower than the chemical container will gravity-feed chemical into it. This “flooded suction” installation will reduce output error due to increased suction lift. A shut-off valve, pinch-clamp, or other means to halt gravity-feed to the pump must be installed during servicing.

NOTE: Install a back flow prevention check valve at the discharge side of the pump to prevent the system fluid from flowing back through pump during tube replacement or during tube rupture.

NOTE: It is recommended to have a pressure relief valve at the discharge side of the of pump to prevent premature wear and damage to the pump tube, in the event that the discharge line becomes blocked.

NOTE: The FlexFlo® peristaltic metering pump does not require back pressure. Keep the discharge pressure as low as possible to maximize the tube life.

4.2 Dimensions

A2P Dimensions

Dim	Inches	cm
A	10-1/4”	26
B	7-1/2”	19
C	14”	35.6
D	9-1/2”	24.1
E	11”	27.9
F	3-3/8”	8.6
G	1-1/4”	3.2
H	2-1/2”	6.4
I	4-7/8”	12.3
J	7-1/4”	18.5
K	7-3/4”	19.7

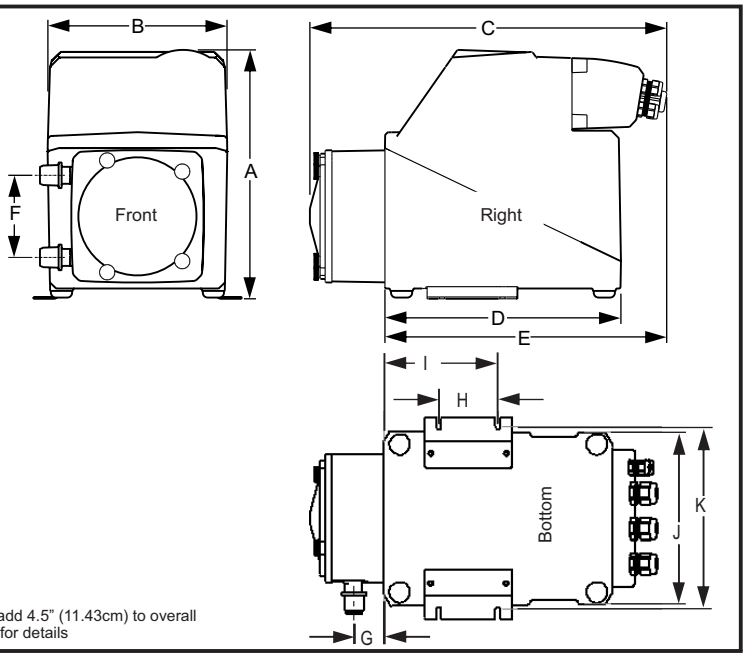

Note: Optional Extended Bracket add 4.5” (11.43cm) to overall height (dimension A). See page 3 for details

4.3 Installing Injection Fitting and Strainer

CAUTION Proper eye and skin protection must be worn when installing and servicing pump.

CAUTION **This pump has been evaluated for use with water only**. Also, this pump has been tested by NSF International for use with 12-1/2% sodium hypochlorite only.

Injection Fitting and Strainer for 1/4" (.64 cm) I.D. Connection End Models

Discharge Injection Fitting / Check Valve

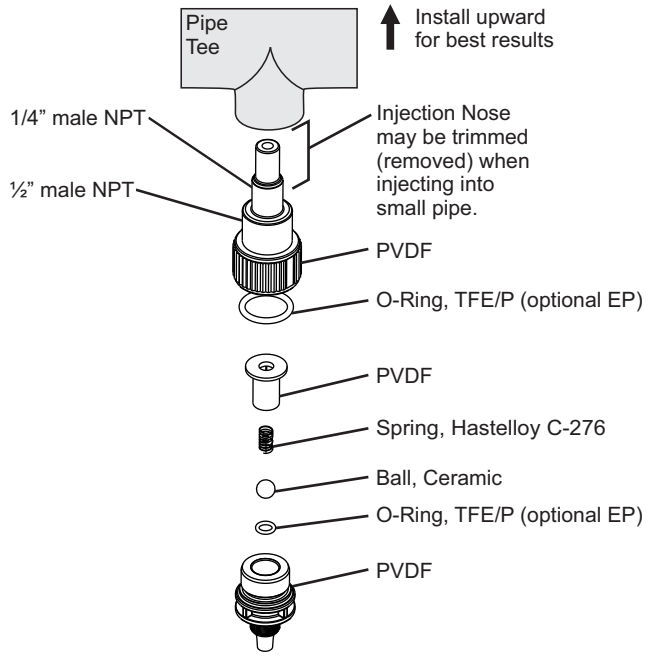

Suction Tubing and Strainer

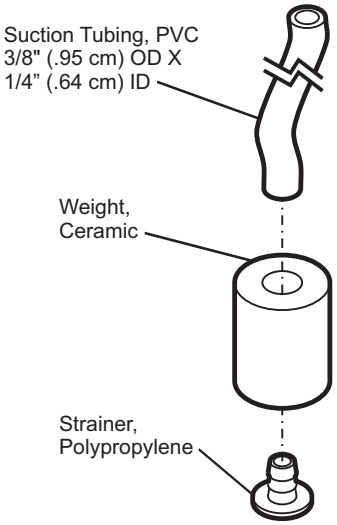

5.0 Power Connections

WARNING	Risk of electric shock – cord connected models are supplied with a grounding conductor and grounding-type attachment plug. To reduce risk of electric shock, be certain that it is connected only to a properly grounded, grounding-type receptacle.
WARNING	Electrical connections and grounding (earthing) must conform to local wiring codes. Be certain that a grounding conductor is connected to terminal T11-1 located in wiring compartment.
WARNING	Risk of electric shock - Disconnect electricity before removing wiring compartment cover.

Be certain to connect pump to proper supply voltage. Using incorrect voltage will damage pump and may result in injury. Voltage requirement is printed on pump serial label.

Input power: 115VAC 50/60 Hz 1.5 amp or 230/240VAC 50/60 Hz 0.7 amp.

Power switch located in Junction Box.

Use voltage your power cord is rated for.

Cord connected models are supplied with a ground wire conductor and a grounding type attachment plug (power cord). To reduce risk of electric shock, be certain that power cord is connected only to a properly grounded, grounding type receptacle.

Permanently connected models must be properly grounded. Be certain that a grounding conductor is connected to terminal T11-1 located in wiring compartment.

Never strap control (input / output) cables and power cables together.

Power Interruption: This pump has an auto-restart feature which will restore pump to operating state it was in when power was lost.

Note: *When in doubt regarding your electrical installation, contact a licensed electrician.*

WIRING COMPARTMENT COVER

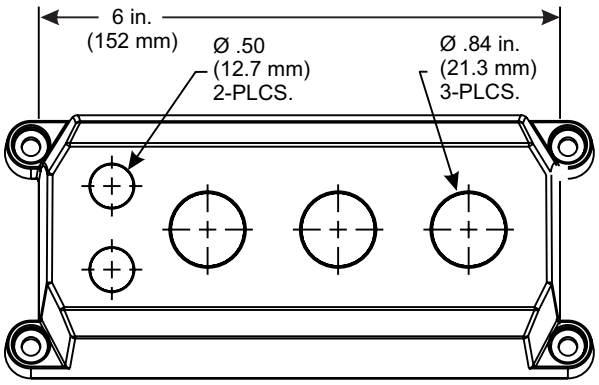

POWER CORD OPTIONS

Three power cord plug types available.
Power cord length is 6 feet (3.83 meters)



115V 60Hz NEMA 5/15 (USA) max: 125V AC	230V 60Hz NEMA 6/15 (USA) max: 250V AC	240V 50Hz CEE 7/VII (EU) max: 250V AC

Included cable and conduit connectors:

QTY.	DESCRIPTION
Qty: 2	.50 Inch (12.7 Mm) Liq-tight Hole Plugs (mat'l = Neoprene), Pre-installed
Qty: 2	.875 Inch (22.2 Mm) Liq-tight Hole Plugs (mat'l = Neoprene), 2 Pre-installed
Qty: 2	.50 Inch (12.7 Mm) Liq-tight Connectors For Pass Thru Cords (mat'l = Nylon) Acceptable Cable Diameter .118 To .255 Inch (3.0 To 6.5 Mm), Not Installed
Qty: 2	.875 Inch (22.2 Mm) Liq-tight Connectors For Pass Thru Cords (mat'l = Nylon) Acceptable Cable Diameter .200 To .395 Inch (5.1 To =10.0 Mm), 1 Pre-installed With Power Cord Models
Qty: 1	Metallic Liq-tight Connectors For .50 Inch Flexible Conduit (mat'l = Die Cast Zinc), Not Installed

5.1 Wiring Terminals and I/O Schematics

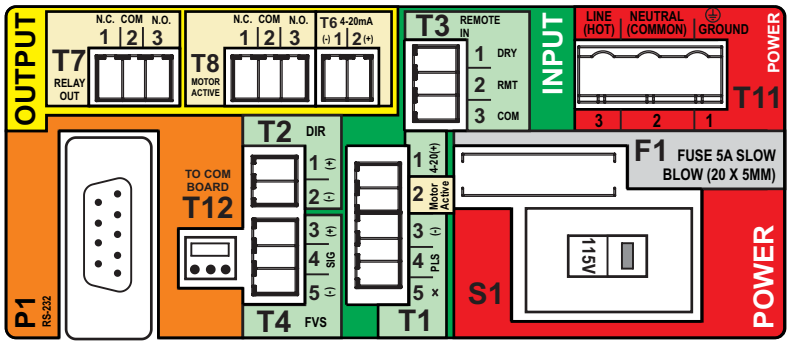

WARNING Risk of electric shock - All wiring must be insulated and rated 300V minimum.

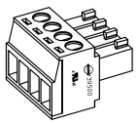

Terminals T1 Thru T8
Plug type
16 - 24 AWG

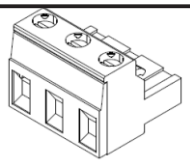

Power Input Terminal T11
Plug type
14 - 30 AWG

Shielded cables should be used on all input signal wires.

FUNCTION	TERM	PIN #	RATING	ELECTRICAL SP.	BLOCK DIAGRAM
INPUT: FVS SYSTEM (FLOW VERIFICATION SENSOR) FV SENSOR ONLY	T4	3	(+) POSITIVE		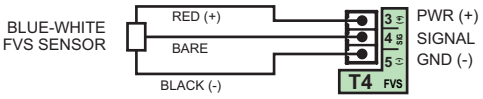
	T4	4	SIGNAL		
	T4	5	(-) NEGATIVE		
INPUT: FVS SYSTEM (FLOW VERIFICATION SENSOR) FS or FP MICRO-FLO FLOW METER ONLY					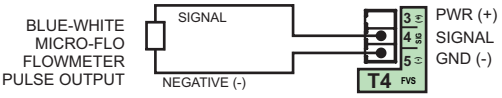
	T4	4	SIGNAL		
	T4	5	(-) NEGATIVE		
INPUT: REMOTE START / STOP (DRY CONTACT C.)	T3	1	(+) POSITIVE	NO VOLTAGE	**NOTE:** USE ONLY DRY CONTACT FOR REMOTE S/S WHEN USING 4-20mA INPUT 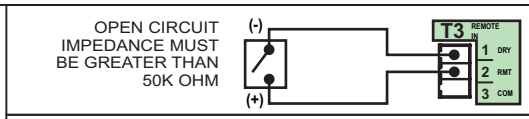
	T3	2	(-) NEGATIVE		
INPUT: REMOTE START / STOP (WET CONTACT C.)	T3	2	(+) POSITIVE	6 TO 30 VOLT DC 1 AMP MAX.	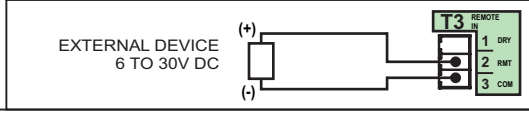
	T3	3	(-) NEGATIVE		
OUTPUT: RELAY, 3 AMP	T7	1	NORM. CLOSED	Form C 3 AMP MAX AT 250 VAC, 3 AMP MAX AT 30 VOLT DC	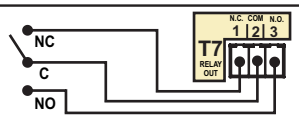
	T7	2	COMMON		
	T7	3	NORM. OPEN		
INPUT: POWER	T11	1	GROUND	115V OR 230V AC MANUAL SWITCH 50 / 60 HZ 100W	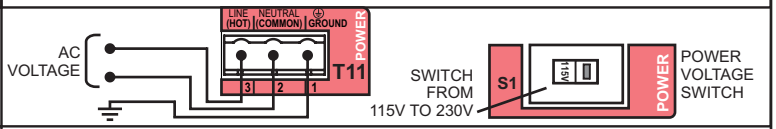
	T11	2	NEUTRAL		
	T11	3	LINE (HOT)		
FUSE	F1	N/A	5 AMP	5A SLOW BLOW (20 X 5MM)	

6.0 How to Operate Flex-Pro - Control Pad

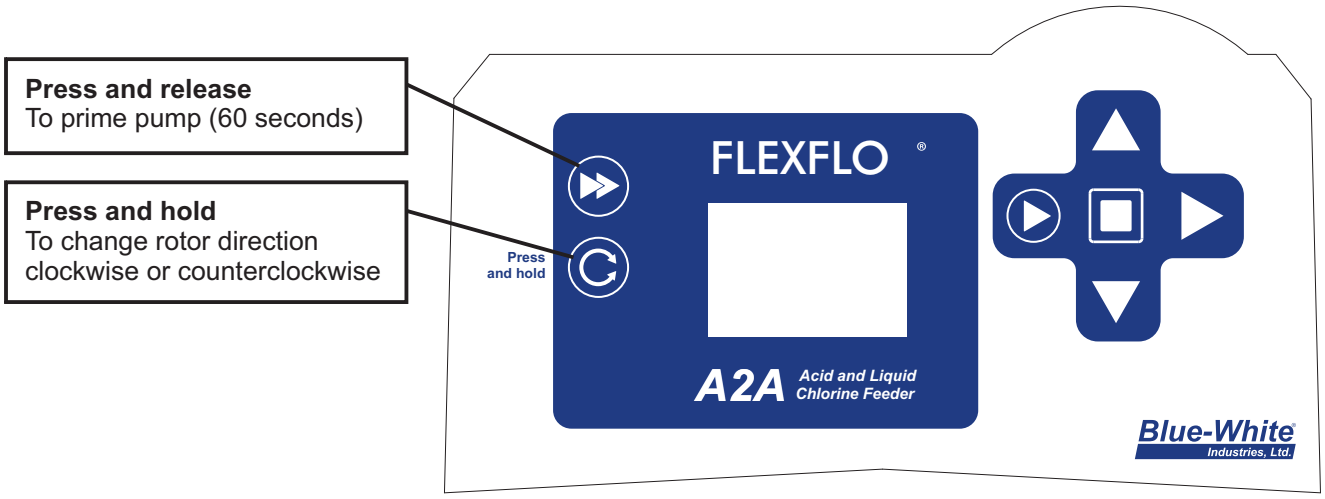

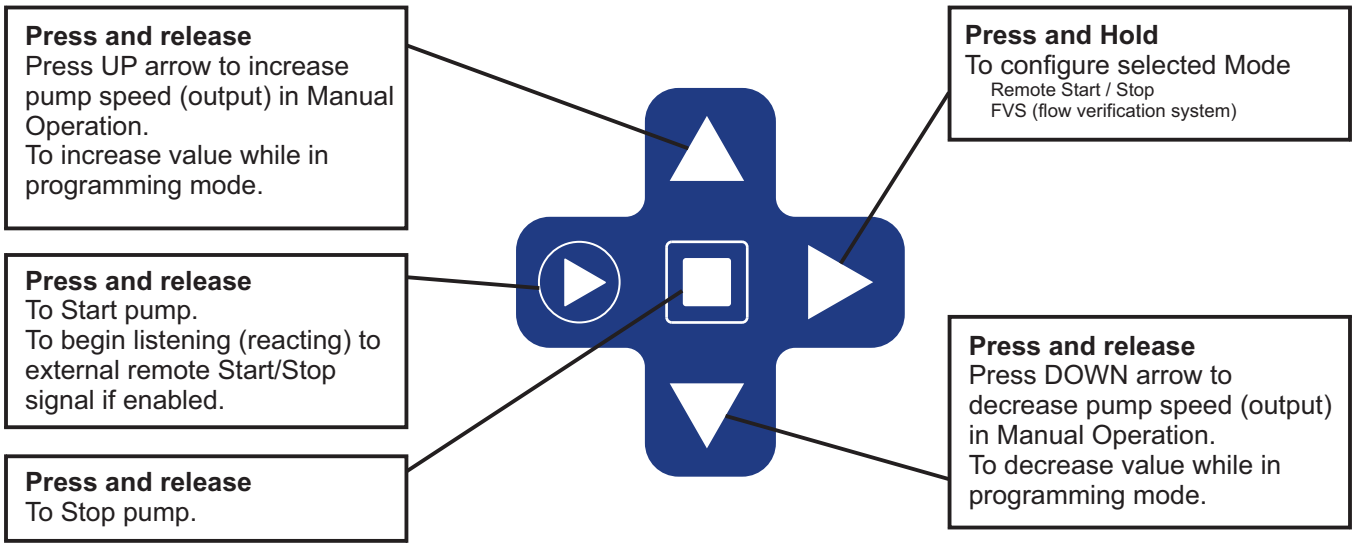

Tube Life Timer
To view amount of run time hours on currently installed tube. START + DOWN arrow displays current pump tube timer. Hold down START button, then press and release DOWN arrow.

7.0 Set Remote Start / Stop

Used to remotely start and stop pump using a dry contact closure signal.
When activated; CLOSE = START and OPEN = STOP.

Set to NO = Remote Start / Stop is disabled
Set to Yes = Remote Start / Stop is enabled

Can be used with external foot pedal, PLC, contact closure or other similar external devices.

Default setting = No (disabled)

Step 1

Press and release STOP button

Note: Cannot enter programming mode while pump is in running.



Step 2

Press and hold RIGHT arrow button until 'Remote' icon begins flashing.
Default setting 'NO' will also be visible when entering remote start / stop setup.

Note: If 'YES' had been selected previously, then 'YES' will be displayed on screen.

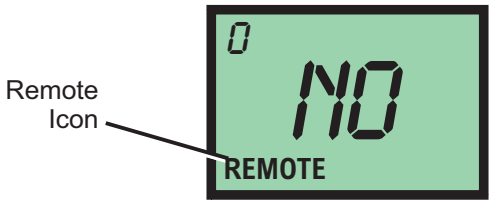

Step 3

Press and release DOWN arrow to change setting to 'YES.'
To change setting back to 'NO' press and release UP arrow.



Step 4

After you've made your selection, press and release RIGHT arrow button. This saves your setting.
You can now modify FVS setting (see next page) or you can exit Setup by pressing and holding RIGHT arrow button for a few seconds until you return to Run screen.



Running pump with Remote Start / Stop enabled, 'REMOTE' icon will always be visible on lower left side of screen.
Pump will display 'STBY' (standby) if pump is in stop mode via contact closure signal. **Please use caution in this mode, pump can start at anytime. If you must perform maintenance to pump, press and release STOP button.**

7.1 Set FVS (flow verification system)

Flow verification sensor sold separately.

Flow verification system is designed to stop pump in an event sensor does not detect flow during pump operation. Indicating an empty chemical tank, clogged injection fitting, loose tubing connection, etc.

To allow pump to clear any gasses that may have accumulated over time, an alarm delay time value from 1 to 255 seconds must be programmed.

Note: An alarm delay of 000 seconds disables FVS system.

Step 1

Press and release STOP button

Note: Cannot enter programming mode while pump is in running.



Step 2

Press and hold RIGHT arrow button until 'Remote' icon begins flashing.
This indicates that you've entered Setup menu.

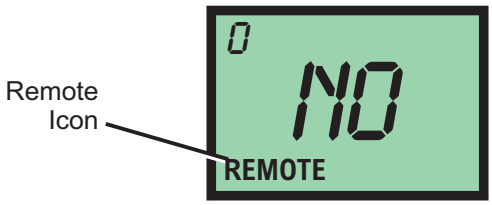

Step 3

Press and release RIGHT arrow to scroll through menu until you see FVS icon.
If you pass FVS screen, continue to press and release RIGHT arrow button until FVS icon appears.



Step 4

FVS icon will appear for 1 second, followed by numbers.
These numbers indicate delay time setting for FVS.
Select a delay time in seconds. Delay time is amount of time pump will wait to receive a pulse from sensor until an alarm it triggered.
A delay time of 00 deactivates FVS feature.

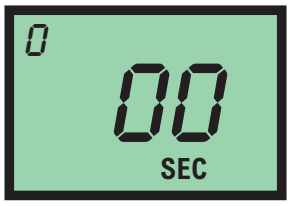

Step 5

After you've made your selection, press and release RIGHT arrow button. This saves your setting.
Press and hold RIGHT arrow to exit Setup menu and return to runtime screen.



Time-out - Flex-Pro pumps have a time-out setting of 20 seconds while in configuration menus. If built-in timer exceeds 20 seconds without a button being pressed, then pump will exit configuration menu. Changes will only be saved after RIGHT arrow button is pressed and released.

Flow Verification Sensor is designed to give you two installation options.

Sensor can be installed:

- Directly on pumphead of A2A pump, suction side.
- Anywhere on suction side of A2A pump.

Wiring for sensor can be connected directly to an A2 pump. Pump will stop pumping if sensor detects no flow. A relay will then close allowing for remote alarm indication or initiation of a back-up injector pump. **Install FVS Flow Sensor -** Flow Verification Sensor should be installed on inlet (suction) side of pump tube. Sensor includes a PVC tubing insert, located inside sensors female thread connection, that is designed to seal sensor onto pump tube inlet adapter. Thread sensor onto pump tube until tubing insert is snug against pump tube inlet fitting - do not over-tighten.

Sensor Model Number	Published Flow Range	Actual Working Range with Flex-Pro Pump
	ML/Min	ML/Min
FV-100	30-300	30-200
FV-200	100-1000	50-900
FV-300	200-2000	100-1800
FV-400	300-3000	300-3000
FV-500	500-5000	500-5000
FV-600	700-7000	700-7000



Confirm FVS flow range - Flow Verification Sensor (FVS) will only function within its operating range. See chart for available ranges.

Example: Sensor model FV-100 has an operation range of 30-300 ml/min when used as a flowmeter. However, due to pressure drop across sensor, pump's suction capability is limited to 14.7 psi. When used as a Flow Verification Sensor with a peristaltic pump, effective operating range is reduced to 30-200 ml/min.

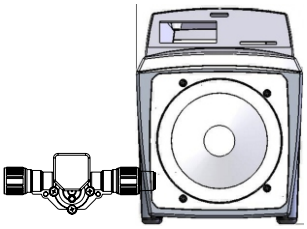

NOTE: If pump output is less than 30 ml/min, sensor will not detect chemical and a signal will not be sent to pump, resulting in an alarm condition.

NOTE: For low viscosity (water-like) fluids only. Consult factory if attempting to use with viscous fluids.

8.0 Manual Operation

Used to manually control speed of pump.

Use UP and DOWN arrows to adjust speed while pump is running.

To select exact run speed, follow steps below.

Runtime Screen Shot 1

Displays motor speed percentage.
Pump Running in Manual Operation

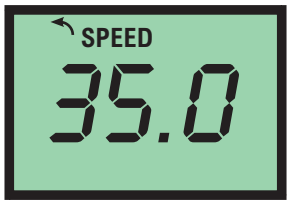

Runtime Screen Shot 2

Displays motor speed percentage.
Pump Running in Manual Operation with Remote Start / Stop enabled (see page 11).

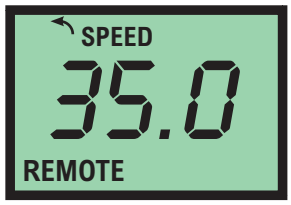

Runtime Screen Shot 3

Displays 'Stand-By' status with Remote start/stop enabled and waiting for signal to start.

Caution, pump can start up at anytime in this condition.
Press STOP button before performing maintenance.

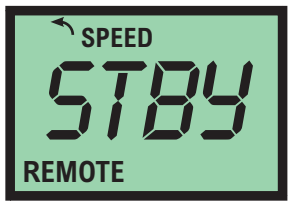

Runtime Screen Shot 4

Display tube life timer.
Press and hold START button.
Press and release DOWN arrow.

Displays amount of total runtime hours on currently installed tube.
Time will be displayed in hours.
Timer will be display for approximately 5 seconds before returning to previous runtime screen.



With pump operating in manual operation, pump speed can be changed at anytime by using UP or DOWN arrows during operation.

9.0 Pump Tube Timer

Flex-Pro has a built in Pump Tube Timer. Timer starts when rotor is rotating and stops when rotor is idle.

To view current Pump Tube Timer value, press and hold START button, then press and release DOWN arrow.

Tube Timer screen will appear. Screen will display current Pump Tube Time in run-time hours. Tube Timer screen will display for 4 seconds and then switch back to previous operating display screen.

While displayed, press START button twice to reset Pump Tube Timer to zero.

When replacing pump tube, pump will ask you if you'd like to reset Pump Tube Timer. If you choose YES, screen will display current Pump Tube Time for 5 seconds before timer is reset to zero.

Tube Life Timer

Display tube life timer.
Press and hold START button.
Press and release DOWN arrow.

Displays amount of total runtime hours on currently installed tube.
Time will be displayed in hours.
Timer will be display for approximately 5 seconds before returning to previous runtime screen.



10.0 TFD (Tube Failure Detection)

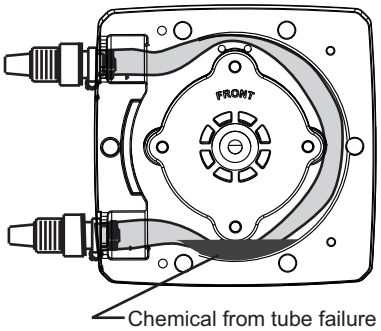

Flex-Pro is equipped with a *Tube Failure Detection* System which is designed to stop pump and provide an output alarm in event pump tube should rupture and chemical enters pump head. Pump will detect a chemical with a conductivity reading greater than 500 microsiemens. Chemicals with a conductivity of less than 500 microsiemens will not be detected.

This patented system is capable of detecting presence of a large number of chemicals including Sodium Hypochlorite (Chlorine), Hydrochloric (muriatic) Acid, Sodium Hydroxide, and many others. System will not be triggered by water (rain, condensation, etc.) or silicone oil (roller and tubing lubricant).

If system has detected chemical, pump tube must be replaced and pump head and roller assembly must be thoroughly cleaned. Failure to clean roller assembly will void warranty.

If TFD alarm occurs, pump will stop, close an alarm output, and screen will flash TFD with an alarm icon.

Confirm Chemical Detection

To determine if your chemical will be detected by system, remove pump head cover and pump tube and roller assembly.

Place a small amount of chemical in bottom of pump head - just enough to cover sensors. Replace pump head cover only.

Turn on pump (press start). If TFD system detects chemical, pump will stop after a two second confirmation period and TFD Alarm screen will display. If TFD system does not detect chemical, pump will continue to run after confirmation period.

Carefully clean chemical out of pump head being sure to remove all traces of chemical from sensor probes. Replace roller assembly and tubing. Replace pump head cover. Press START button to clear alarm condition and restart pump.

11.0 Alarm Relay

Pump has a built in 6 amp alarm output relay. Relay is pre-configured to energize on tube failure detection (TFD) and on Flow Verification Sensor (FVS).

A Flow Verification Sensor must be installed and configured for relay to trigger on no-flow conditions.

12.0 Reverse Rotor Rotation

CAUTION ⚠	Prior to service, pump clean water through pump and suction / discharge line to remove chemical.

CAUTION ⚠	Always wear protective clothing, face shield, safety glasses and gloves when working on or near your metering pump. Additional precautions should be taken depending on solution being pumped. Refer to MSDS precautions from your solution supplier.

Reverse rotation of pump; press and hold REVERSE ROTATION button until rotor begins rotating in opposite direction. This process can be used for many reasons throughout various industries.

Two reasons for reversing current rotor rotation; to purge chemical from tubing and to extend tube life.

Plan ahead before reversing rotor rotation. If check valves are installed, make necessary arrangements to allow back flow.

CAUTION ⚠	Failure to install check valves in their proper flow direction can cause excess pressure (PSIg) build up in system and can result in tube rupture. Always use extreme caution and ensure proper connections when using this feature.

If your desire is to simply extend tube life:

Typically tubing fails on outlet side (pressure side) of tube assembly in pump head.

Reversing rotation, moves outlet side (pressure side) to opposite side of tube assembly, greatly increasing tube life.

Stop pump before tube failure occurs.

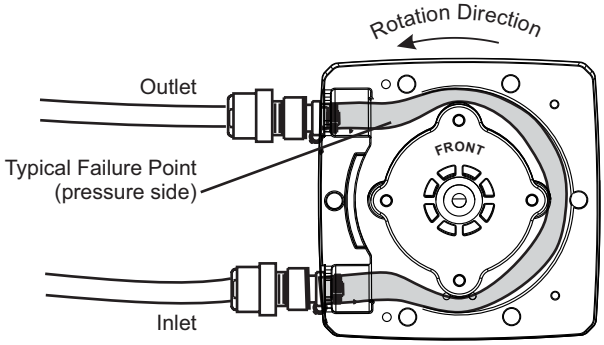

⚠

Disconnect power from pump. Carefully purge any pressure in discharge line of pump. Disconnect suction end tubing and discharge end tubing from pump head tubing.

IMPORTANT! Swap sides of suction (inlet) and discharge (outlet) tubing. No need to remove Pump Head Cover.

Double check all connections before starting pump.

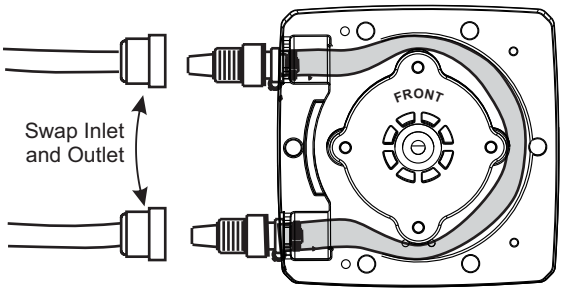

13.0 Tube Replacement

CAUTION ⚠	Prior to service, pump clean water through pump and suction / discharge line to remove chemical.
CAUTION ⚠	Always wear protective clothing, face shield, safety glasses and gloves when working on or near your metering pump. Additional precautions should be taken depending on solution being pumped. Refer to MSDS precautions from your solution supplier.
CAUTION ⚠	Use provided Tube Installation Tool to leverage tubing into pump head, NOT YOUR FINGERS.
CAUTION ⚠	Use extreme caution when replacing pump tube. Be careful of your fingers and DO NOT place fingers near rollers.

13.1 Tube Removal

Step 1

Wear protective clothing, face shield, safety glasses and gloves during tube replacement.

CAUTION ⚠

Relieve (remove) system pressure on discharge and suction side of pump. Failure to do so will cause solution to squirt when disconnecting tube connections. **SAFETY FIRST, REMOVE PRESSURE...**

Disconnect system plumbing from pump tube adapters.

Step 2

Press and release STOP button.

Remove four black thumb screws from front of pump head cover. Turn screws counterclockwise to remove.

Remove pump head cover by pulling straight out.

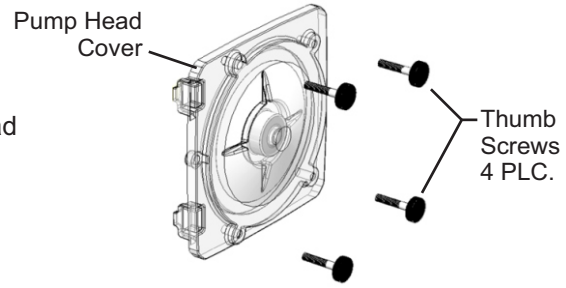

Step 3

With pump stopped, securely grab hold of suction side of tube adapter.

CAUTION! Keep fingers away from rollers and rotor.

Press and release START button to allow rotation of rotor.

Gently pull suction side tube adapter out, away from pump.

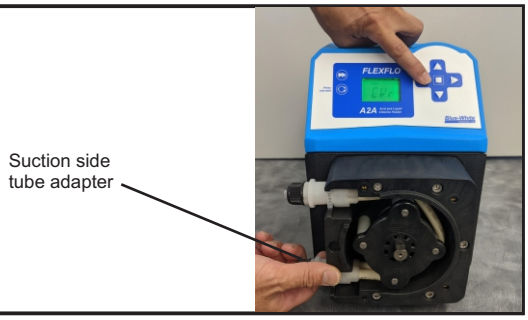

Step 4

Continue to pull suction side adapter out of pump head while rotor is in rotation.

Press and release STOP button.

Carefully pull discharge side of tube adapter out of pump head.

Dispose of used tubing properly.

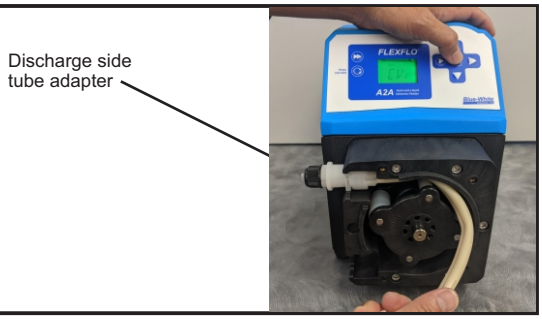

13.2 Tube Installation

Before you begin. Thoroughly clean Pump Head and Rotor. Rotor can be removed by pulling straight out. After cleaning process, push Rotor back on shaft. See drawing below for proper assembly. IMPORTANT! Rotor direction; word “FRONT” on Rotor must face forward (front of pump).

Step 1

Press and release stop button to ensure pump is stopped.

With pump stopped, press suction side of tube adapter securely into pump head.

Clip Tube Installation Tool to discharge side of tube adapter.

Always keep fingers away from rollers and rotor.



Step 2

Your hand should only come in contact with installation tool.

Press and release START button.

Use installation tool to leverage tubing into pump head while rotor is rotating.

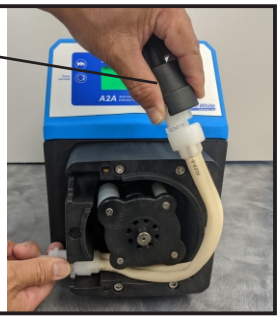

Step 3

Continue to hold onto installation tool.

Allow rotor to rotate a few times, this will stretch tubing out.

After a few rotations, pull installation tool and tubing in direction of rotation.

Press discharge side of tube adapter securely into pump head.



Step 4

Press and release STOP button on pump.

Suction and discharge tube adapter ends should be securely held in place on pump head as illustrated in photo.

Secure pump head cover to pump head using four black thumb screws.



Tip! Apply silicone oil to outside of Flex-A-Thane tube for longer life.



Tube Installation Tool
90002-278

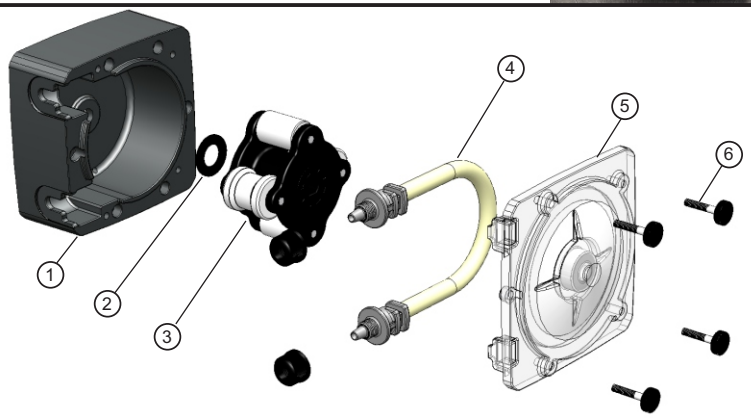

14.0 Pump Maintenance

CAUTION	Always wear protective clothing, face shield, safety glasses and gloves when working on or near your metering pump. Additional precautions should be taken depending on solution being pumped. Refer to MSDS precautions from your solution supplier.

Routine Inspection and Maintenance

Pump requires very little maintenance. However, pump and all accessories should be checked weekly. This is especially important when pumping chemicals. Inspect all components for signs of leaking, swelling, cracking, discoloration or corrosion. Replace worn or damaged components immediately.

Cracking, crazing, discoloration during first week of operation are signs of severe chemical attack. If this occurs, immediately remove chemical from pump. Determine which parts are being attacked and replace them with parts that have been manufactured using more suitable materials. Manufacturer does not assume responsibility for damage to pump that has been caused by chemical attack.

How to Clean and Lubricate Pump

Pump will require occasional cleaning. Amount will depend on severity of service.

- When changing pump tube assembly, pump head chamber, roller assembly and pump head cover should be wiped free of any dirt and debris.

- When changing pump tube assembly, wipe motor shaft with clean towel. Apply a small amount of grease to shaft. This will help prevent possibility of rotor sticking to motor shaft.

- Pump head cover bearing may require grease periodically. Apply a small amount of grease (Aeroshell aviation grease #5 or equivalent) when necessary.

- Although not necessary, 100% silicone lubrication may be used on roller assembly.

- Periodically clean injection/check valve assembly, especially when injecting fluids that calcify such as sodium hypochlorite. These lime deposits and other build ups can clog fitting, increase back pressure and interfere with check valve operation.

- Periodically clean suction strainer.

15.0 REPLACEMENT PARTS LIST

Item	Description	Part	Quantity
1	Spacer, back	90011-217	1
2	Roller Assembly Complete (Rotor), For NEE and NGG Tubes	A2-SNGG-R	1
3	Tube Assembly, 3/8” OD Tube Compression Flex-A-Prene NGG (.187 ID) Tube Assembly, 3/8” OD Tube Compression Flex-A-Prene NEE (0.093 ID)	A2-SNGG-T A2-SNEE-T	1
4	Pump Head Cover, Polycarbonate - New design, backwards compatible	A2-SXX-C	1
5	Thumb Screw w/ 5/8” Key Drive, max torque 6-8 in. lbs (4 required per pump, sold individually)	90011-237	1
6	Tube Nut, Compression, For 3/8” Tubing (2 required per pump, sold individually)	C-330-6	1

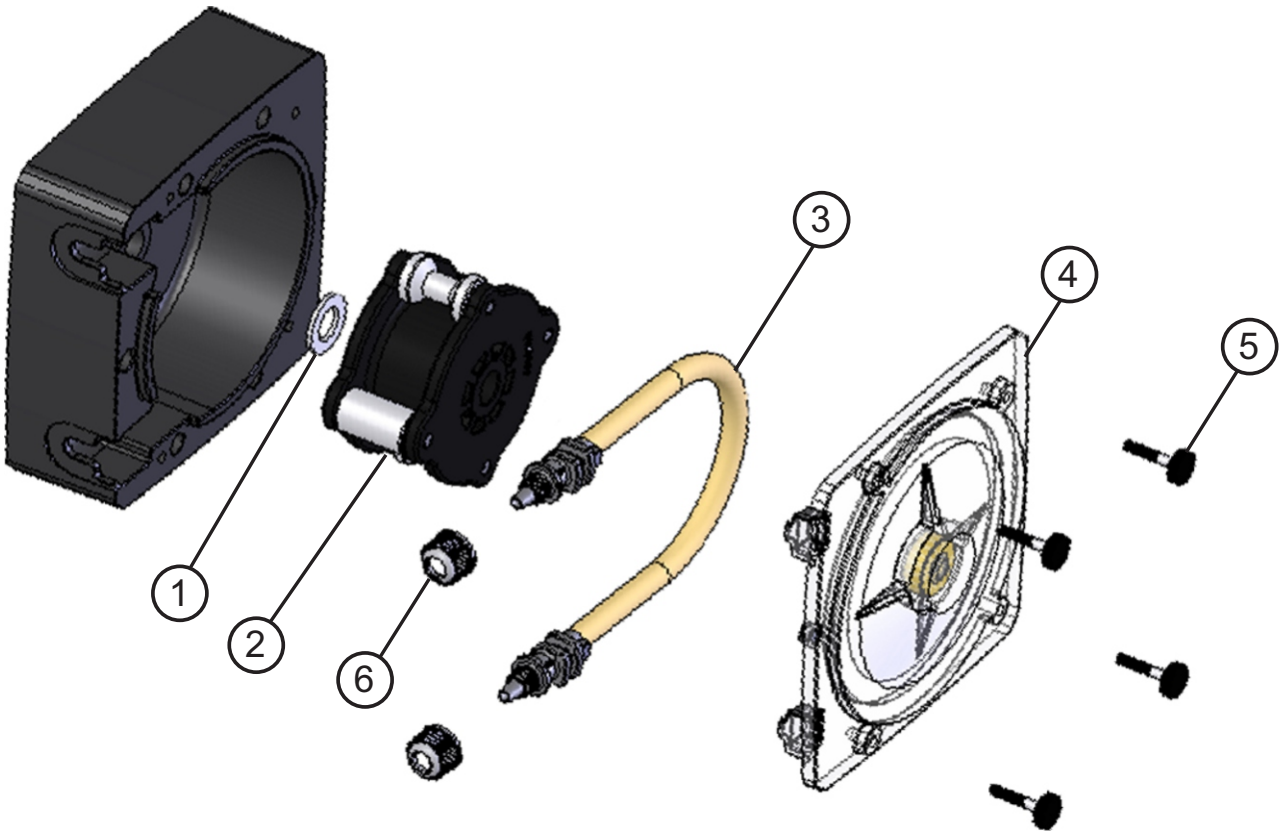

16.0 WARRANTY

16.1 LIMITED WARRANTY

Your new FLEXFLO pump is a quality product and is warrantied for 36 months from date of purchase (proof of purchase is required). The pump will be repaired or replaced at our discretion. Failure must have occurred due to defect in material or workmanship and not as a result of operation of the product other than in normal operation as defined in the pump manual. Warranty status is determined by the pump's serial label and the sales invoice or receipt. The serial label must be on the pump and legible. The warranty status of the pump will be verified by Blue-White or a factory authorized service center.

Pump Head and roller assembly is warrantied against damage from chemical attack when proper TFD (Tube Failure Detection) system instructions and maintenance procedures are followed.

16.2 WHAT IS NOT COVERED

- Pump Tube Assemblies and rubber components – They are perishable and require periodic replacement.
- Pump removal, or re-installation, and any related labor charge.
- Freight to the factory, or service center.
- Pumps that have been tampered with, or in pieces.
- Damage to the pump that results from misuse, carelessness such as chemical spills on the enclosure, abuse, lack of maintenance, or alteration which is out of our control.
- Pumps damaged by faulty wiring, power surges or acts of nature.

16.3 PROCEDURE FOR IN WARRANTY REPAIR

Contact the factory to obtain a RMA (Return Material Authorization) number. Carefully pack the pump to be repaired. It is recommended to include foot strainer and injection/check valve fitting since these devices may be clogged and part of the problem. Please enclose a brief description of the problem as well as the original invoice or sales receipt, or copy showing the date of purchase. Prepay all shipping costs. COD shipments will not be accepted. Warranty service must be performed by the factory or an authorized service center. Damage caused by improper packaging is the responsibility of the sender. When In-Warranty repair or replacement is completed, the factory pays for return shipping to the dealer or customer.

16.4 PRODUCT USE WARNING

Blue-White products are manufactured to meet the highest quality standards in the industry. Each product instruction manual includes a description of the associated product warranty and provides the user with important safety information. Purchasers, installers, and operators of Blue-White products should take the time to inform themselves about the safe operation of these products. In addition, Customers are expected to do their own due diligence regarding which products and materials are best suited for their intended applications. Blue-White is pleased to assist in this effort but does not guarantee the suitability of any particular product for any specific application as Blue-White does not have the same degree of familiarity with the application that the customer/end user has. While Blue-White will honor all of its product warranties according to their terms and conditions, Blue-White shall only be obligated to repair or replace its defective parts or products in accordance with the associated product warranties. **BLUE-WHITE SHALL NOT BE LIABLE EITHER IN TORT OR IN CONTRACT FOR ANY LOSS OR DAMAGE WHETHER DIRECT, INDIRECT, INCIDENTAL, OR CONSEQUENTIAL, ARISING OUT OF OR RELATED TO THE FAILURE OF ANY OF ITS PARTS OR PRODUCTS OR OF THEIR NONSUITABILITY FOR A GIVEN PURPOSE OR APPLICATION.**

16.5 CHEMICAL RESISTANCE WARNING

Blue-White offers a wide variety of wetted parts. Purchasers, installers, and operators of Blue-White products must be well informed and aware of the precautions to be taken when injecting or measuring various chemicals, especially those considered to be irritants, contaminants or hazardous. Customers are expected to do their own due diligence regarding which products and materials are best suited for their applications, particularly as it may relate to the potential effects of certain chemicals on Blue-White products and the potential for adverse chemical interactions. Blue-White tests its products with water only. The chemical resistance information included in this instruction manual was supplied to Blue-White by reputable sources, but Blue-White is not able to vouch for the accuracy or completeness thereof. While Blue-White will honor all of its product warranties according to their terms and conditions, Blue-White shall only be obligated to repair or replace its defective parts or products in accordance with the associated product warranties. **BLUE-WHITE SHALL NOT BE LIABLE EITHER IN TORT OR IN CONTRACT FOR ANY LOSS OR DAMAGE, WHETHER DIRECT, INDIRECT, INCIDENTAL, OR CONSEQUENTIAL, ARISING OUT OF OR RELATED TO THE USE OF CHEMICALS IN CONNECTION WITH ANY BLUE-WHITE PRODUCTS.**

Model Number Matrix

Model Number

A2A	FlexFlo® Peristaltic Metering Pump
Maximum Motor Speed	
2	130 RPM (Maximum rotor rotation speed)
Power Cord (Operating voltage requirement 96VAC to 264VAC)	
4	115V 50/60Hz, power cord NEMA 5/15 plug (US)
5	230V 50/60Hz, power cord NEMA 6/15 plug (US)
6	220V 50/60Hz, power cord CEE 7/V11 plug (EU)
8	240V 50/60Hz, power cord AS 3112 plug (Australia/New Zealand)
9	230V 50/60Hz, power cord BS 1363/A plug (United Kingdom)
X	No Power Cord
Pump Tube Material, Pump Tube Size, Operating Flow Range	
NEE	Flex-A-Prene® .093 ID, 0.055 to 5.5 GPH
NGG	Flex-A-Prene® .187 ID, 0.16 to 15.9 GPH

A2A	**2**	**4**	**-**	**S**	**NGG**	**Sample Model Number**



Users of electrical and electronic equipment (EEE) with the WEEE marking per Annex IV of the WEEE Directive must not dispose of end of life EEE as unsorted municipal waste, but use the collection framework available to them for the return, recycle, recovery of WEEE and minimize any potential effects of EEE on the environment and human health due to the presence of hazardous substances. The WEEE marking applies only to countries within the European Union (EU) and Norway. Appliances are labeled in accordance with European Directive 2002/96/EC.

Contact your local waste recovery agency for a *Designated Collection Facility* in your area.

Blue-White®

5300 Business Drive
Huntington Beach, CA 92649
USA

TEL: 714-893-8529
FAX: 714-894-9492

www.blue-white.com
sales@blue-white.com
customerservice@blue-white.com

P.N. 80000-613

Rev 2 20210628