CALL TOLL FREE 877-742-2878 FOR SALES AND SUPPORT
RETURN TO BurtProcess.com

Blue-White®

Engineering and Technical Data

A2

FLEXFLO® Peristaltic Metering Pump



Features

> Self priming chemical metering pump delivers smooth chemical feed
> Tube Failure Detection (TFD) senses tube rupture
> Signal inputs include: 4-20mA, Pulse Inputs, Frequency Inputs
> Signal outputs include: Relay (3 amp), 4-20mA (optional), Motor Status

NEMA 4X

Highlights

Flow range
.02 – 17.2 GPH
.07 – 65.1 LPH

Pressures
125 PSI
(8.6 bar)

Turndown ratio
100 : 1

Exclusive
Tube Failure Detection
(TFD)

Motor
Brushed
DC Motor

Warranty
3 Years

Control Methods

Control Methods	Manual Control	4-20mA Input	Remote Start/Stop	Alarm Output	FVS	Motor Status Output
A2F	•		•	•	•	
A2V	•	•	•	•	•	•

For more help and information regarding **A2**, please visit www.blue-white.com or scan this QR code.

Engineering Specifications

Maximum Working Pressure	125 psig (8.6 bar)
Maximum Fluid Temperature	185 °F (85 °C)
Maximum Ambient Temperature	14 °F to 115 °F/ -10 °C to 46 °C
Maximum Viscosity	12,000 Centipoise
Maximum Suction Lift	30 ft. Water at sea level (14.7 atm psi)
Operating Voltage	115VAC/60Hz, 1ph (1.5 Amp Maximum)
	230VAC/60Hz, 1ph (0.7 Amp Maximum)
	220VAC/50Hz, 1ph (1.0 Amp Maximum)
	240VAC/50Hz, 1ph (1.0 Amp Maximum)
	230VAC/50Hz, 1ph (1.0 Amp Maximum)
Power Cord Options	115V60Hz = NEMA 5/15 (USA)
	230V60Hz = NEMA 6/15 (USA)
	220V50Hz = CEE 7/VII (EU)
	240V50Hz = AS 3112 (Australia/New Zealand)
	230V50Hz = BS 1363/A (UK)
Motor	Brushed DC, 1/8 H.P.
Duty cycle	Continuous
Motor Speed Adjustment Range	100:1, (1.0% – 100% motor speed) Max. rpm = 130
Display	Backlit LCD, UV resistant
Keypad	Eight button positive action tactile switch keypad
Maximum Overall Dimensions	7-1/2” W x 10-1/4” H x 14” D (19 W x 26 H x 35.6 D cm)
Product Weight	28.4lb. (12.9 Kg)
Approximate Shipping Weight	35 lb. (15.9 Kg)
Enclosure	NEMA 4X (IP66)
RoHS Compliant	Yes
Standards	cETLus, CE

Output Specifications

Feed Rate			Max Speed	Max Pressure	Max Temperature
GPH	**LPH**	**ML/Min**	**RPM**	**PSI(bar)**	**°F (°C)**
Flex-A-Prene® A2 Tube Pumps					
.02 - 1.7	.07 - 6.5	1-108	130	125 (8.6)	185 (85)
.044 - 4.44	.168 - 16.8	2.80 - 280	130	110 (7.6)	185 (85)
.172 - 17.2	.651 - 65.1	10.85 - 1085	130	110 (7.6)	185 (85)
Flex-A-Chem® A2 Tube Pumps					
.14 - 14.3	.54 - 54	9.0 - 900	130	50 (3.4)	130 (54)
Flex-A-Thane® A2 Tube Pumps					
.04 - 4.0	15 - 15.2	3 - 253	130	65 (4.5)	130 (54)
.09 - 9.3	.35 - 35.2	6 - 587	130	65 (4.5)	130 (54)
.15 - 14.98	.567 - 56.7	9.45 - 945	130	65 (4.5)	130 (54)

NOTE: Replace “V” in model number for “F” when ordering manual output control. Feed output not affected. See pg.4 for model number matrix.

Materials of Construction

Non-wetted Components:
Enclosure: 413 Aluminum (Polyester powder coated)
Pump Head: Valox® (PBT) thermoplastic
Pump Head Cover: Polycarbonate
Permanently lubricated sealed motor shaft support ball bearing.
Cover Screws: Stainless steel
Roller Assembly:
Rotor: Valox® (PBT)
Rollers: Nylon
Roller Bearings: SS Ball Bearings
Motor Shaft: Chrome plated steel
TFD System Sensor: Hastelloy C-276
Power Cord: 3 conductor, SJTW-A water-resistant
Tube Installation Tool: GF Nylon
Mounting Brackets and Hardware: 316 Stainless steel

Wetted Components:
Pump Tube Assembly:
Tubing : Flex-A-Prene®, Flex-A-Chem® or Flex-A-Thane®
Adapter Fittings : PVDF
Injection/Back-Flow Check Valve:
Body & Insert: PVDF
Check Ball: Ceramic
Spring: Hastelloy C-276
Ball Seat O-Ring: TFE/P
Static Seal O-Ring: FKM
Ancillary Items Provided:
With "S" Tubing Type Only:
Suction Tubing: 3/8" OD x 1/4" ID x 10' Clear PVC
Discharge Tubing: 3/8" OD x 1/4" ID x 10' Polyethylene
Suction Strainer: Polypropylene
With "B" Tubing and "M" M/NPT Connections Only:
Suction Strainer:
Body: PVDF
Check Ball: Ceramic
Ball Seat O-Ring: TFE/P
With "C" Tri-clamp and "Q" Quick Disconnect Connections* Only:
(Available for ND, NEE, NGG, and G2G only)

NOTE: * Quick Disconnect Valves sold separately.

Dimensions

Dim	Inch	cm
A	10-1/4"	26
B	7-1/2"	19
C	14"	35.6

Dim	Inch	cm
D	9-1/2"	24.1
E	11"	27.9
F	3-3/8"	8.6

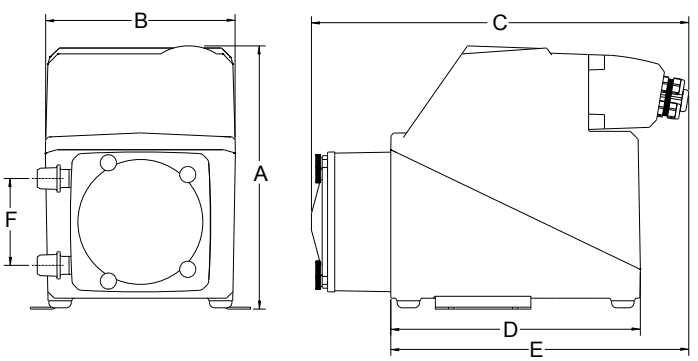

Model Number Matrix

FLEXFLO® Model Number

A2	FLEXFLO® Peristaltic Metering Pump

Series Control Options

F	Single manual output control (manual/local control only)
V	Multiple automatic input output control and alarm modes (remote control)

Power Cord (operating voltage requirement 96VAC to 264VAC)

4	115V / 60Hz, power cord NEMA 5/15 plug (US)	**8**	240V / 50HZ, power cord AS 3112 plug (AU/New Zealand)
5	230V / 60Hz, power cord NEMA 6/15 plug (US)	**9**	230V / 50HZ, power cord BS 1363 plug (UK)
6	220V / 50HZ, power cord CEE 7/VII plug (EU)	**X**	No Power Cord

Inlet/Outlet Connection Size, Connection Type, Connection Material

S	3/8” OD x 1/4” ID Tube Compression Fitting, Natural PVDF (Kynar)
M	1/2” Male NPT Fitting, Natural PVDF (Kynar)
B	1/2” ID Tubing Barb Fitting, Natural PVDF (Kynar), available for ND, NEE, NGG, G2G only
C	1/2” - 3/4” Tri-clamp connections, Natural PVDF (Kynar), available for ND, NEE, NGG, and G2G only
Q	Quick Disconnect, Natural PVDF (Kynar), available for ND, NEE, NGG, and G2G only (valves sold seperately)
MB	1/2” Male BSPT Fitting, Natural PVDF (Kynar)

Pump Tube Material, Pump Tube Size

ND	Flex-A-Prene® .078 ID, 0.01 to 1.7 GPH	**GE**	Flex-A-Thane® .125 ID, 0.02 to 4.0 GPH
NEE	Flex-A-Prene® .093 ID, 0.022 to 4.44 GPH	**GG**	Flex-A-Thane® .187 ID, 0.05 to 9.3 GPH
NGG	Flex-A-Prene® .187 ID, 0.086 to 17.2 GPH	**TH**	Flex-A-Chem® .250 ID, 0.08 to 14.9 GPH
G2G	Flex-A-Thane® .187 ID, 0.07 - 14.98 GPH		

Options (leave this blank for standard model with left facing pump head inlet/outlet)

1	TI40-6V Threadless injection check valve, replaces A-014NK-6A threaded check valve
2	C340A Foot valve, replaces standard C-342 inlet strainer (no check valve)
3	4-20 mA analog output (requires “V” series control)
R	Right facing pump head, input / output (Left facing fluid input / output is standard)
D	Down facing pump head, input / output (Left facing fluid input / output is standard)

A2	**F**	**2**	**4**	**-**	**S**	**ND**	**-**	**1**	**Sample Model Number**

5300 Business Drive, Huntington Beach, CA 92649
TEL 714-893-8529 | FAX 714-894-9492 | www.blue-white.com | sales@blue-white.com

ISO 9001:2015 CERTIFIED
SINCE Quality 1957
MADE IN THE USA