CALL TOLL FREE 877-742-2878 FOR SALES AND SUPPORT
RETURN TO BurtProcess.com

Blue-White®

Engineering and Technical Data

A1

FLEXFLO® Peristaltic Metering Pump



Features

> Tube Failure Detection (TFD+) senses tube rupture
> Heavy duty display shield protects pump controls
> Relay outputs include a single 250V/3A and a single solid state
> Remote Start/Stop
> SCADA 4-20mA Input

NEMA 4X

Highlights

Flow range
0.001 – 5.60 GPH
0.002 – 21.2 LPH

Pressures
100 PSI
(6.89 bar)

Turndown ratio
2,000 : 1

Exclusive
Tube Failure Detection
(TFD+) System

Motor
Brushless
DC

Warranty
3 Years

Control Methods

Control Methods	Manual Control	4-20mA Input	Remote Start/Stop	Alarm Output	FVS	Motor Status Output
A1F	•		•	•	•	•
A1V		•	•	•	•	•

For more help and information regarding **A1**, please visit www.blue-white.com or scan this QR code.

Engineering Specifications

Maximum Working Pressure	100 psig (6.89 bar)
Maximum Fluid Temperature	185 °F (85 °C)
Maximum Ambient Temperature	14 °F to 115 °F/ -10 °C to 46 °C
Maximum Viscosity	5,000 Centipoise
Maximum Suction Lift	30 ft. Water at sea level (14.7 atm psi)
Operating Voltage	115V60Hz 1 PH (0.6A max.)
	220V50Hz 1 PH (0.3A max.)
	230V60Hz 1 PH (0.3A max.)
	230V50Hz 1 PH (0.3A max.)
	240V50Hz 1 PH (0.3A max.)
Power Cord Options	115V60Hz = NEMA 5/15 (USA)
	230V60Hz = NEMA 6/15 (USA)
	220V50Hz = CEE 7/VII (EU)
	240V50Hz = AS 3112 (Australia/New Zealand)
	230V50Hz = BS 1363/A (UK)
Motor	Brushless DC, 50W
Duty Cycle	Continuous
Motor Speed Adjustment Resolution	2,000 : 1 (0.05 - 100%) Max rpm = 65 rpm
Maximum Overall Dimensions	7.25” W x 9” H x 10” D (18.5 W x 22.9 H x 25.2 D cm)
Product Weight	6 lb. (2.7 Kg)
Approximate Shipping Weight	13 lb. (5.9 Kg)
Approximate Shipping Dimensions	10.5” W x 13.75” H x 11” D (26.7 W x 35 H x 28 D cm)
Enclosure	NEMA 4X (IP66), Valox® (PBT) & PA12
RoHS Compliant	Yes
Standards	cETLus, CE

Materials of Construction

Non-wetted Components:	
Enclosure:	Valox® (PBT) & PA12
Pump Head:	Valox® (PBT)
Pump Head Cover:	Acrylic
	Permanently lubricated sealed motor shaft support bronze sleeve bearing.
Cover Screws:	Stainless steel, polypropylene cap
Roller Assembly:	Rotor: Valox® (PBT)
	Rollers: Nylon
	Roller Bearings: Bronze
Motor Shaft:	Chrome plated steel
TFD System Sensor:	Polysulfone (PES)
Power Cord:	3 Conductor, SJTW-A water-resistant
Tube Installation Tool:	GF Nylon
Mounting Brackets and Hardware:	316 Stainless steel screws, GF Nylon bracket

Wetted Components:	
Pump Head Assembly:	Tubing: Flex-A-Prene®, Flex-A-Thane® or Flex-A-Chem®
	Adapter Fittings: PVDF
Injection / Back-Flow Check Valve:	Body & Insert: PVDF
	Check Ball: Ceramic
	Spring: Hastelloy C-276
	Ball Seat O-Ring: TFE/P
	Static Seal O-Ring: FKM
Ancillary Items Provided:	Suction Tubing: 3/8” OD x 1/4” ID x 10’ Clear PVC
	Discharge Tubing: 3/8” OD x 1/4” ID x 10’ Polyethylene (LLDPE)
	Suction Strainer: Polypropylene
	Weight: Ceramic

Output Specifications

Tube Model	Feed Rate		Max Speed	Max Pressure	Max Temperature
	GPH	LPH	RPM	PSI(bar)	°F(°C)
A1-1*	0.001 - 1.09	0.002 - 4.13	65	65 (4.50)	130 (54)
A1-3*	0.003 - 5.60	0.011 - 21.2	65	50 (3.45)	130 (54)
A1-6*	0.001 - 1.35	0.003 - 5.14	65	100 (6.89)	185 (85)
A1-7*	0.0042 - 4.17	0.0158 - 15.8	65	50 (3.45)	185 (85)
A1-8*	0.0031 - 3.09	0.0117 - 11.7	65	50 (3.45)	130 (54)

Dimensions

Dim	Inch	cm	Dim	Inch	cm
A	9”	22.9	**D**	7.25”	18.5
B	10”	25.2	**E**	2.5”	6.4
C	7.75”	19.6			

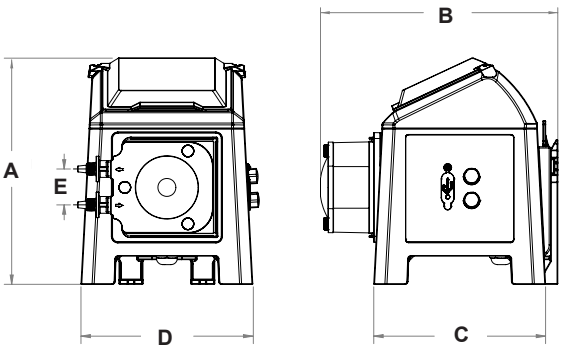

Model Number Matrix

FLEXFLO® Model Number

A1	FLEXFLO® Peristaltic Metering Pump

Series

F	Standard Control Methods (Manual, Remote, FVS)
V	4-20mA Input, In Addition to Standard Control Methods (Manual, Remote, FVS)

Power Cord (Operating voltage requirement 96VAC to 264VAC)

4	115V 50/60Hz, power cord NEMA 5/15 plug (US)	**8**	240V 50/60Hz, power cord AS 3112 plug (AU/New Zealand)
5	230V 50/60Hz, power cord NEMA 6/15 plug (US)	**9**	230V 50/60Hz, power cord BS 1363/A plug (UK)
6	220V 50/60Hz, power cord CEE 7/V11 plug (EU)		

Pump Tube Size and Material

1	1/4” OD Flex-A-Thane®
3	7/16” OD Flex-A-Thane®
6	3/8” OD Flex-A-Prene®
7	7/16” OD Flex-A-Prene®
8	7/16” OD Flex-A-Chem®

Inlet/Outlet Connection Size, Connection Type

T	3/8" OD x 1/4" Tube Compression Fitting
M	1/2" Male NPT Fitting

A1	**F**	**4**	**-**	**6**	**T**	**Sample Model Number**

Accessories



KIT-S07
STAR III 7 GALLON TANK



KIT-S15
STAR III 15 GALLON TANK



KIT-S30
STAR III 30 GALLON TANK



KIT-MB
FLOOR MOUNTING BRACKETS



CABLE-UAC
USB A-C CABLE



KIT-M12
TWO M12 CABLES

NOTE: Accessories sold separately.

*KIT-M12-3 THREE M12 CABLES

P.N. 85000-152 A1 REV 1 20210823

5300 Business Drive, Huntington Beach, CA 92649
TEL 714-893-8529 | FAX 714-894-9492 | www.blue-white.com | sales@blue-white.com

ISO 9001:2015 CERTIFIED
SINCE Quality 1957
MADE IN THE USA