CALL TOLL FREE 877-742-2878 FOR SALES AND SUPPORT
RETURN TO BurtProcess.com

Blue-White®

Engineering and Technical Data

M3

FLEXFLO® Peristaltic Metering Pump

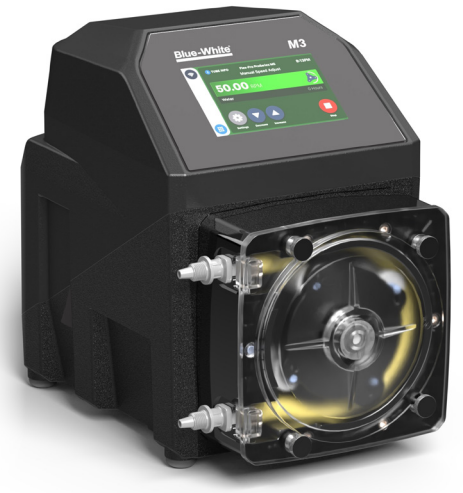

Features

> 5” touchscreen color LCD display
> User-friendly configurations
> Self priming peristaltic metering pump delivers smooth chemical feed
> Tube Failure Detection (TFD) system senses tube failure
> Inputs include: 4-20mA, Pulse Inputs, Industrial Protocols, Remote Start/Stop

Video link:

NSF Certified to NSF / ANSI Standard 61 · ETL c US · CE · NEMA 4X

Highlights

Flow range
.0002 - 33.3 GPH
.0007 - 126 LPH

Pressures
125 PSI
(8.6 bar)

Turndown ratio
10,000 : 1

Exclusive
Tube Failure Detection (TFD)

Motor
Brushless DC Motor

Warranty
5 Years

Control Methods

Control Methods	Manual Control	4-20mA Input	Remote Start/Stop	Pulse Input	Frequency Input	Ethernet/ IP	Modbus TCP/IP	Profibus	Alarm Outputs
M3	•	•	•	•	•	•	•	•	•

For more help and information regarding **M3**, please visit www.blue-white.com or scan this QR code.

Engineering Specifications

Maximum Working Pressure (excluding pump tubes)	125 psig (8.6 bar)
	NOTE: See individual pump tube assembly maximum pressure ratings.
Maximum Fluid Temperature (excluding pump tubes)	185 °F (85 °C)
	NOTE: See individual pump tube assembly max. temperature ratings.
Maximum Viscosity	12,000 Centipoise
Maximum Suction Lift	30 ft. Water, 0 psig (9.14 m, 0 bar)
Ambient Operating Temperature	14 °F to 115 °F (-10 °C to 46 °C)
Ambient Storage Temperature	-40 °F to 158 °F (-40 °C to 70 °C)
Operating Voltage	115VAC/60Hz, 1ph (2.0 Amp Maximum)
	230VAC/60Hz, 1ph (1.0 Amp Maximum)
	220VAC/50Hz, 1ph (1.0 Amp Maximum)
	240VAC/50Hz, 1ph (1.0 Amp Maximum)
	230VAC/50Hz, 1ph (2.0 Amp Maximum)
Power Cord Options	115V60Hz = NEMA 5/15 (USA)
	230V60Hz = NEMA 6/15 (USA)
	220V50Hz = CEE 7/VII (EU)
	240V50Hz = AS 3112 (Australia/New Zealand)
	230V50Hz = BS 1363/A (UK)
Motor	Brushless DC, 1/4 hp
Motor Speed Adjustment Range	10,000:1 (0.01% - 100% motor speed) Max RPM = 125
Motor Speed Adjustment Resolution	0.1% increments > 1% motor speed and < 100%
	0.01% increments < 1% motor speed
Display	5” touchscreen color LCD, UV resistant.
Display Languages	English, Spanish, French, German, and Portuguese selectable
Maximum Overall Dimensions	8-1/4”W x 11-3/4”H x 13-1/4”D (20.9W x 29.8H x 34.5D cm)
Product Weight	25.4lb. (11.5 Kg)
Security	Programmable 6-digit password
Approximate Shipping Weight	30 lb. (13.6 Kg)
Enclosure	NEMA 4X (IP66), Polyester powder coated aluminum & Noryl
RoHS Compliant	Yes
Standards	cETLus, CE, NSF61

Dimensions

Dim	Inch	cm
A	11-3/4”	29.8
B	8-1/4”	20.9
C	13-1/2”	34.5

Dim	Inch	cm
D	10-1/2”	26.5
E	4-1/4”	10.8

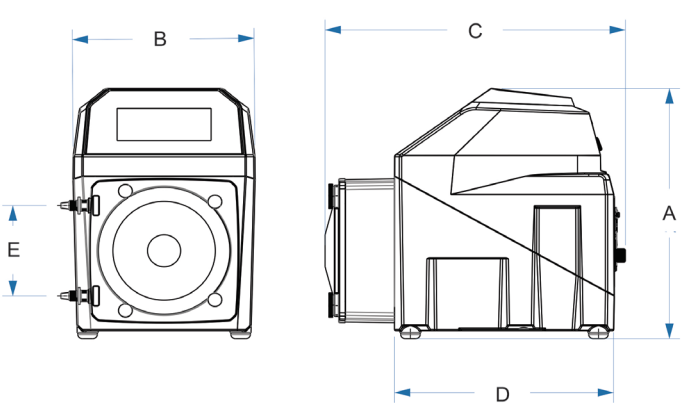

Materials of Construction

Non-wetted Components:
Enclosure: 413 Aluminum (Polyester powder coated) & Noryl
Pump Head: Valox® (PBT) thermoplastic
Pump Head Cover: Polycarbonate
Permanently lubricated sealed motor shaft support ball bearing.
Cover Screws: Stainless steel, polypropylene cap
Roller Assembly:
Rotor: Valox® (PBT)
Rollers: Nylon
Roller Bearings: SS Ball bearings
Motor Shaft: Chrome plated steel
TFD System Sensor: Hastelloy C-276
Power Cord: 3 conductor, SJTW-A water-resistant
Tube Installation Tool: GF nylon
Mounting Brackets and Hardware: 316 Stainless steel

Wetted Components:
Pump Tube Assembly:
Tubing: Flex-A-Prene®, Flex-A-Chem® or Flex-A-Thane®
Adapter Fittings: PVDF

Output Specifications

Feed Rate			Max Speed	Max Pressure	Max Temperature	Tube Material / Size
GPH	LPH	ML/Min	RPM	PSI (bar)	°F (°C)	
Flex-A-Prene® M3 Tube Pumps						
.0002 - 2.10	.0007 - 7.92	.0132 - 132	125	125 (8.6)	185 (85)	ND
.0025 - 25.3	.0096 - 96.0	.1596 - 1596	125	125 (8.6)	185 (85)	NJ
.0033 - 33.3	.0126 - 126	.2100 - 2100	125	125 (8.6)	185 (85)	NK
.0033 - 33.3	.0126 - 126	.2100 - 2100	125	30 (2.1)	185 (85)	NKL
.0004 - 4.76	.0018 - 18.0	.03 - 300	125	110 (7.6)	185 (85)	NEE
.0019 - 19.02	.0072 - 72.0	.12 - 1200	125	110 (7.6)	185 (85)	NGG
Flex-A-Chem® M3 Tube Pumps						
.0015 - 15.06	.0057 - 57.0	.0950 - 950	125	50 (3.4)	130 (54)	TH
.0028 - 28.5	.0108 - 108	.18 - 1800	125	50 (3.4)	130 (54)	TK
Flex-A-Thane® M3 Tube Pumps						
.0004 - 4.60	.0017 - 17.4	.0290 - 290	125	65 (4.5)	130 (54)	GE
.0010 - 10.1	.0038 - 38.4	.0637 - 637	125	65 (4.5)	130 (54)	GG
.0024 - 24.9	.0094 - 94.2	.1570 - 1570	125	65 (4.5)	130 (54)	GH
.0028 - 28.5	.0108 - 108	.1800 - 1800	125	65 (4.5)	130 (54)	GK
.002 - 18.23	.007 - 69.0	.115 - 1150	125	65 (4.5)	130 (54)	G2G

Model Number Matrix

Model Number Model Number

M3	FLEXFLO® Peristaltic metering pump

Power Cord (operating voltage user selectable 115V/240 Vac 50/60Hz)

4	115V / 60Hz, power cord NEMA 5/15 plug (US)	**8**	240V / 50HZ, power cord AS 3112 plug (AU/New Zealand)
5	230V / 60Hz, power cord NEMA 6/15 plug (US)	**9**	230V / 50HZ, power cord BS 1363/A plug (UK)
6	220V / 50HZ, power cord CEE 7/VII plug (EU)	**X**	No Power Cord

Inlet/Outlet Connection Size, Connection Type, Connection Material

S	3/8” OD x 1/4” ID Tube Compression Fitting, Natural PVDF (Kynar)	**C**	1/2” - 3/4” Tri-clamp connections, Natural PVDF (Kynar), available for ND, NEE, NGG, and G2G only
M	1/2” Male NPT Fitting, Natural PVDF (Kynar)	**Q**	Quick Disconnect, Natural PVDF (Kynar), available for ND, NEE, NGG, and G2G only (valves sold seperately)
B	1/2” Hose Barb, Natural PVDF (Kynar), available for ND, NEE, NGG, and G2G only	**MB**	1/2” Male BSPT Fitting, Natural PVDF (Kynar)

Pump Tube Material, Pump Tube Size, Output Range

ND	Flex-A-Prene® .078 ID	**NJ**	Flex-A-Prene® .312 ID	**G2G**	Flex-A-Thane® .187 ID
NF	Flex-A-Prene® .150 ID	**NK**	Flex-A-Prene® .375 ID	**GH**	Flex-A-Thane® .250 ID
NEE	Flex-A-Prene® .093 ID	**NKL**	Flex-A-Prene® .375 ID	**GK**	Flex-A-Thane® .375 ID
NGG	Flex-A-Prene® .187 ID	**GE**	Flex-A-Thane® .125 ID	**TH**	Flex-A-Chem® .250 ID
NH	Flex-A-Prene® .250 ID	**GG**	Flex-A-Thane® .187 ID	**TK**	Flex-A-Chem® .375 ID
NHL	Flex-A-Prene® .250 ID				

Options (leave this blank for standard model with left facing pump head inlet/outlet)

R	Right facing pump head, input / output (Left facing fluid input / output is standard)
D	Down facing pump head, input / output (Left facing fluid input / output is standard)

M3	**S**	**2**	**4**	**-**	**S**	**ND**	**R**	**Sample Model Number**

Accessories

NOTE: For use with the Quick Disconnect Flex-A-Prene® Tube Assembly. Kits sold separately.



KIT-QSV
3/8” OD, 1/4” TUBING

*KIT-QSE EP O-RINGS



KIT-QBV
1/2” HOSE BARB

*KIT-QBE EP O-RINGS



KIT-QMV
1/2” M/NPT

*KIT-QME EP O-RINGS



CABLE-UAC
USB A-C CABLE



KIT-M12
TWO M12 CABLES

*KIT-M12-3 THREE M12 CABLES



KIT-DP3
ONE 3ft PROFIBUS CABLE



KIT-MVM
M-TUBE FITTINGS KIT



KIT-MTVS
S-TUBE FITTINGS KIT

*KIT-MTVB B-TUBE FITTINGS

M3 is sold and serviced exclusively by highly skilled, factory authorized technicians.

5300 Business Drive, Huntington Beach, CA 92649
TEL 714-893-8529 | FAX 714-894-9492 | www.blue-white.com | sales@blue-white.com

ISO 9001:2015 CERTIFIED
SINCE Quality 1957
MADE IN THE USA