Blue-White®

Engineering and Technical Data

A-100NA

FLEXFLO® Peristaltic Metering Pump

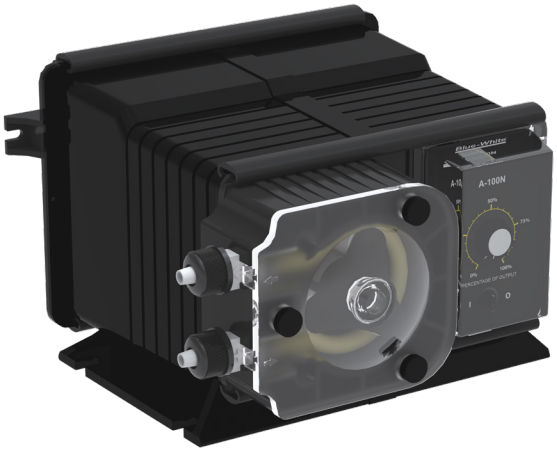

Video link:

Features

- Smooth and accurate peristaltic feed of chlorine and acid.
- Self-priming - even against maximum line pressure. By-pass valves are not required. Cannot vapor lock or lose prime.
- Peristaltic pump design does not have valves that can clog requiring maintenance.
- Output volume is not effected by changes in back pressure.
- Adjustable 60 second repeating interval timer. 3-60 second adjustable on time per 60 second cycle. Simple dial knob control.
- Patented Tube Failure Detection (TFD) system senses tube failure

Highlights

Flow range
.35 - 95.1 GPD
.9 - 250 mL/min

Pressures
up to 100 PSI
(6.9 bar)

Turndown ratio
20 : 1

Max. suction lift
30 ft. Water 0 psig

Motor
Fixed Speed AC

Warranty
1 Year

Control Methods

Control Methods	Manual Flow Control	FVS Input[1]	TFD Alarm Output[2]	FVS Alarm Output[2]	Motor Active Output[2]
A-100NA	Adjustable 60 second cycle time	•	•	•	•

1. Requires flow sensor - sold separately
2. Open-collector output

For more help and information regarding **A-100NA**, please visit www.blue-white.com or scan this QR code.

Engineering Specifications

Max. Working Pressure	6T Tube = 100 psig (6.9 bar)*, 7T Tube = 50 psig (3.4 bar)
Max. Fluid Temperature	130° F (54° C)
Max. Ambient Temperature	14 to 110° F/ -10 to 43° C
Max. Viscosity	5,000 Centipoise
Max. Suction Lift	30 ft. Water at sea level (14.7 atm psi)
Operating Voltage	115VAC/60Hz, 1ph (14 & 30 RPM = 1.37 Amp Max.) (45 & 60 RPM = 1.87 Amp Max.)
	220VAC/50Hz, 1ph (14 & 30 RPM = 0.68 Amp Max.) (45 & 60 RPM = 1.14 Amp Max.)
Power Cord Options	115V 50/60Hz = NEMA 5/15 (USA)
	220V 50/60Hz = NEMA 6/15 (EU)
Motor	AC - Fixed speed
Duty Cycle	Continuous
Flow Adjustment Range	0.35 - 95.1 GPD (0.9 - 250 mL/min)
Output Adjustment Range	5% – 100% motor speed
Solids	50% by volume
TFD (Tube Failure Detection)	Patented sensor. Will stop pump and activate open collector output. 6-30vdc collector voltage. 50mA max sinking current.
FVS (Flow Verification System)	Compatible with optional pulse flow sensor. Will stop pump and activate open collector output. 6-30vdc collector voltage. 50mA max sinking current. Contact factory for sensor options.
Motor Active	Motor active - open collector output. 6-30vdc collector voltage. 50mA max sinking current.
Enclosure	NEMA 3R, IP23, Valox PBT
Product Weight	8 lb. (3.63 Kg)
Approximate shipping wt	10 lb. (4.5 Kg)
RoHS Compliant	Yes
Standards	NSF/ANSI 50, CE, cETLus

* -6T Tube max pressure for 60 rpm model is 75 psi

Output Specifications

Maximum Flow Rate (Pump output range, 5% - 100%)

Tube	14 RPM MODELS					30 RPM MODELS					45 RPM MODELS					60 RPM MODELS				
	GPD	GPH	OZ/MIN	ML/MIN	LPH	GPD	GPH	OZ/MIN	ML/MIN	LPH	GPD	GPH	OZ/MIN	ML/MIN	LPH	GPD	GPH	OZ/MIN	ML/MIN	LPH
6	6.9	0.3	0.6	18.4	1.1	16.0	0.67	1.42	42.1	2.5	24.0	1.0	2.13	63.1	3.8	30.1	1.25	2.67	79.2	4.7
7	21.7	0.9	1.92	57.0	3.4	52.5	2.19	4.66	138	8.3	76.1	3.17	6.76	200	12.0	95.1	3.96	8.45	250	15.0

NOTE: For optimum tube life, specify the pump to operate at the lowest possible RPM and pressure.

Materials of Construction

Non-wetted Components:	
Enclosure:	Valox® (PBT) thermoplastic
Pump Head:	Valox® (PBT) thermoplastic
Pump Head Cover:	Clear Acrylic
	Permanently lubricated sealed motor shaft support bronze sleeve bearing.
Cover Screws:	Stainless steel, polypropylene cap
Roller Assembly:	Rotor: Valox® (PBT)
	Rollers: Nylon
	Roller Bearings: Bronze
TFD System Sensor:	Hastelloy C-276
Power Cord:	3 Conductor, SJTW-A water-resistant
Hardware:	Stainless Steel
Shroud:	Valox® (PBT) thermoplastic

Wetted Components:	
Pump Tube Assembly*:	Tubing: Flex-A-Prene®
	Adapter Fittings: PVDF
Injection / Back-Flow Check Valve:	Body & Insert: Polypropylene
	Check Ball: Ceramic
	Spring: Hastelloy C-276
	Ball Seat O-Ring: TFE/P
	Static Seal O-Ring: FKM
Ancillary Items Provided:	Suction Tubing: 3/8” OD x 1/4” ID x 5’ Clear PVC
	Discharge Tubing: 3/8” OD x 1/4” ID x 5’ Polyethylene (LLDPE)
	Suction Strainer: Polypropylene
	Weight: Ceramic

* One spare tube provide with pump.

Dimensions

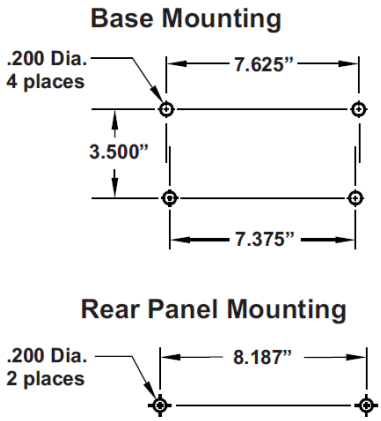

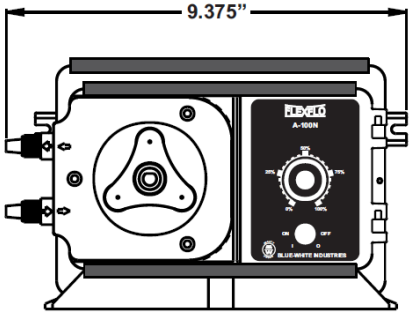

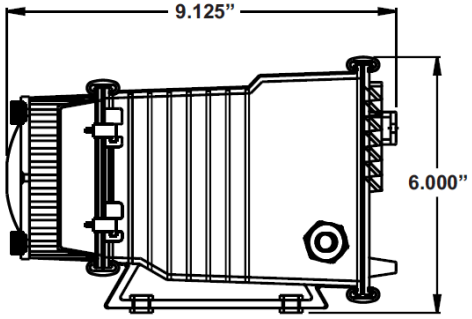

Shroud / Weather Proof

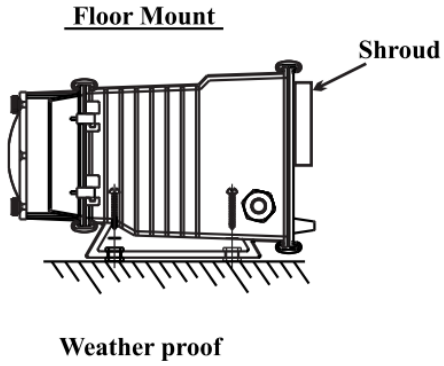

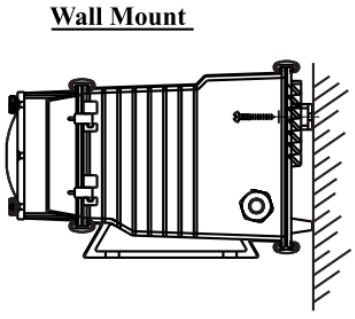

Model Number Matrix

FLEXFLO® Model Number

A1N FLEXFLO® Peristaltic Metering Pump

Maximum Motor RPM

0	**14 RPM**
1	**30 RPM**
2	**45 RPM**
3	**60 RPM**

Power Cord

0	115V / 60HZ, power cord NEMA 5/15 plug (US)
1	220V / 50HZ, power cord CEE7/VII plug (EU)

Input/Output Control

A	Analog Timer, 60 sec. Cycle - 100% duty

Pump Tube Material, Pump Tube Size, Flow Rate

6	3/8” OD Flex-A-Prene®, 100 PSI (14 RPM = 6.9 GPD, 30 RPM = 16.0 GPD, 45 RPM = 24.0 GPD, 60 RPM = 30.1 GPD)
7	7/16” OD Flex-A-Prene®, 50 PSI (14 RPM = 21.7 GPD, 30 RPM = 52.5 GPD, 45 RPM = 76.1 GPD, 60 RPM = 95.1 GPD)

A1N	0	0	A	-	6	T	**Sample Model Number**

Accessories



STAR3-7
STAR3-15
STAR3-30

*** Includes cover and foot valve**

STAR3-7 (7 Gal), STAR3-15(15 Gal), STAR3-30 (30 Gal)
STAR III TANKS, PP

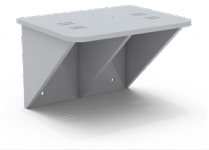

KIT-PSM
WALL MOUNT BRACKET, HDPE



A1-(see spare parts page)
Spare Tube Element



TI40-6V
T.I. INJECTOR, 3/8” OD



C-340A
FOOT VALVE



A-014NK-6A
PVDF INJECTOR

Visit Accessory Pages for more Options

5300 Business Drive, Huntington Beach, CA 92649
TEL 714-893-8529 | FAX 714-894-9492 | www.blue-white.com | sales@blue-white.com

ISO 9001:2015 CERTIFIED
SINCE Quality 1957
MADE IN THE USA