CALL TOLL FREE 877-742-2878 FOR SALES AND SUPPORT

Blue-White®

Engineering and Technical Data

A3

FLEXFLO® Peristaltic Metering Pump

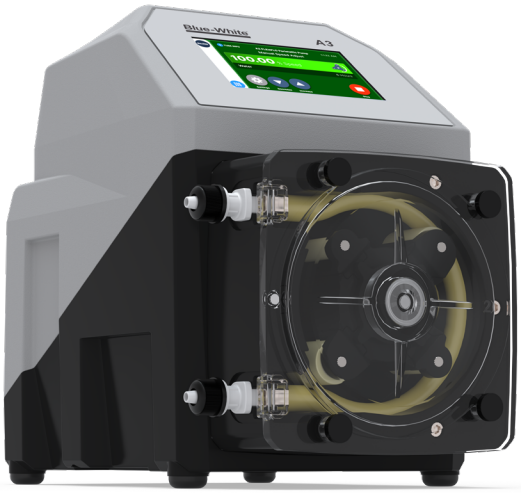

Features

> Self priming chemical metering pump delivers smooth chemical feed
> Tube Failure Detection (TFD) senses tube rupture
> Safe and simple tube replacement
> Signal inputs include: 4-20mA, Pulse Inputs, Frequency Inputs
> Signal outputs include: 4-20mA Output, Frequency Output, one 250V/6 AMP relay output, three 115V/1A output alarm

Video link:

NEMA 4X

Highlights

Flow range
.001 – 33.3 GPH
.003 – 126 LPH

Pressures
125 PSI
(8.6 bar)

Turndown ratio
2,500 : 1

Exclusive
Tube Failure Detection (TFD)

Motor
Brushless DC Motor

Warranty
2 Years

Control Methods

Control Methods	Manual Control	4-20mA Input	Remote Start/Stop	Pulse Input	Frequency Input	Ethernet/ IP	Modbus TCP/IP	Profibus	4-20mA Output	(4) Alarm Outputs	FVS
A3	•	•	•	•	•	•	•	•	•	•	•

For more help and information regarding **A3**, please visit www.blue-white.com or scan this QR code.

Engineering Specifications

Maximum Working Pressure (excluding pump tubes)	125 psig (8.6 bar)
	NOTE: see individual pump tube assembly max. pressure ratings.
Maximum Fluid Temperature (excluding pump tubes)	185 °F (85 °C)
	NOTE: see individual pump tube assembly max. temperature ratings.
Ambient Operating Temperature	14 °F to 115 °F (-10 °C to 46 °C)
Ambient Storage Temperature	-40 °F to 158 °F (-40 °C to 70 °C)
Maximum Viscosity	12,000 Centipoise
Maximum Suction Lift	30 ft. Water, 0 psig (9.14 m, 0 bar)
Operating Voltage	115VAC/60Hz, 1ph (2.0 Amp Maximum)
	230VAC/60Hz, 1ph (1.0 Amp Maximum)
	220VAC/50Hz, 1ph (1.0 Amp Maximum)
	240VAC/50Hz, 1ph (1.0 Amp Maximum)
	230VAC/50Hz, 1ph (1.0 Amp Maximum)
Power Cord Options	115V60Hz = NEMA 5/15 (USA)
	230V60Hz = NEMA 6/15 (USA)
	220V50Hz = CEE 7/VII (EU)
	240V50Hz = AS 3112 (Australia/New Zealand)
	230V50Hz = BS 1363/A (UK)
Motor	Brushless DC
Motor Speed Adjustment Range	2,500:1 (0.04% – 100%) Max rpm = 125 rpm
Motor Speed Adjustment Resolution	0.1% increments > 1% motor speed and < 100%
	0.01% increments < 1% motor speed
Display	5” touchscreen color LCD, UV resistent
Display Languages	English, Spanish, French, German, and Portuguese selectable
Security	Programmable 6-digit password
Maximum Overall Dimensions	8-1/4”W x 11-3/4”H x 13-1/4”D (20.9W x 29.8H x 34.5D cm)
Product Weight	25.4lb. (11.5 Kg)
Approximate Shipping Weight	30 lb. (13.6 Kg)
Enclosure	NEMA 4X (IP66), Polyester powder coated aluminum & Noryl
RoHS Compliant	Yes
Standards	cETLus, CE

Dimensions

Dim	Inch	cm
A	11-3/4”	29.8
B	8-1/4”	20.9
C	13-1/2”	34.5

Dim	Inch	cm
D	10-1/2”	26.5
E	4-1/4”	10.8

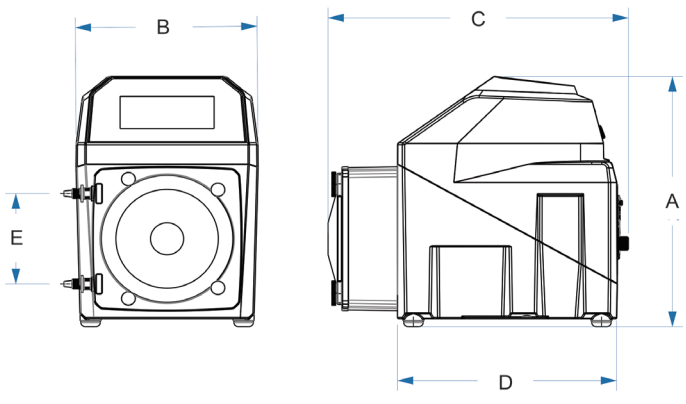

Materials of Construction

Non-wetted Components:
Enclosure: 413 Aluminum (Polyester powder coated) & Noryl
Pump Head: Valox® (PBT) thermoplastic
Pump Head Cover: Polycarbonate
Permanently lubricated sealed motor shaft support ball bearing.
Cover Screws: Stainless steel, polypropylene cap
Roller Assembly:
Rotor: Valox® (PBT)
Rollers: Nylon
Roller Bearings: SS Ball bearings
Motor Shaft: Chrome plated steel
TFD System Sensor: Hastelloy C-276
Power Cord: 3 conductor, SJTW-A water-resistant
Mounting Brackets and Hardware: 316 Stainless steel

Wetted Components:	
Pump Tube Assembly:	Tubing: Flex-A-Prene®, Flex-A-Chem or Flex-A-Thane®
	Adapter Fittings: PVDF
	One spare tube included
Injection / Back-Flow Check Valve (with "S", "B", and "M"):	Body & Insert: PVDF
	Check Ball: Ceramic
	Spring: Hastelloy C-276
	Ball Seat O-Ring: TFE/P (optional EPDM)
	Static Seal O-Ring: TFE/P (optional EPDM)
Ancillary Items Provided:	
With "S" Tubing Type Only:	Suction Tubing: 3/8" OD x 1/4" ID x 10' Clear PVC
	Discharge Tubing: 3/8" OD x 1/4" ID x 10' Polyethylene
	Suction Strainer: PVDF
With "B" Tubing and "M" M/NPT Connections Only:	(Available on ND, NKL, NGG, NEE, G2G)
	Suction Strainer: PVDF

Ancillary Items Not Included (unless stated above):
Injection Fitting, Foot Valve/Strainer, Suction Tubing/Pipe, Discharge Tubing/Pipe, Quick Disconnect Valves, or Communications Wire/ M12 Cable.

** Flex-A-Prene®, Flex-A-Thane®, and Flex-A-Chem® tubing comply with FDA 21 CFR, 117.2600 criteria for food processing.

Output Specifications

Tube Material / Size	Feed Rate			RPM	Max Pressure	Max Temperature	Roller Required
	GPH	LPH	mL/min		PSI (bar)	°F (°C)	
Flex-A-Prene®							
ND	.001 - 2.1	.003 - 7.8	.06 - 132	125	125 (8.6)	185 (85)	A3-SND-R
NEE	.002 - 4.76	.007 - 18.0	.12 - 300	125	110 (7.6)	185 (85)	A3-SNGG-R
NGG	.007 - 19.02	.026 - 72.0	.48 - 1200	125	110 (7.6)	185 (85)	A3-SNGG-R
NHL	.006 - 17.39	.022 - 65.8	.38 - 1097	125	65 (4.5)	185 (85)	A3-STH-R
NK	.013 - 33.3	.050 - 126.0	.82 - 2100	125	125 (8.6)	185 (85)	A3-SNGG-R
NKL	.013 - 33.3	.050 - 126.0	.82 - 2100	125	30 (2.1)	185 (85)	A3-SNGG-R
Flex-A-Chem®							
TH	.006 - 15.06	.022 - 57.0	.38 - 950	125	50 (3.4)	130 (54)	A3-STH-R
TK	.011 - 28.5	.043 - 108	.72 - 1800	125	50 (3.4)	130 (54)	A3-SNGG-R
Flex-A-Thane®							
GE	.002 - 4.60	.007 - 17.4	.13 - 290	125	65 (4.5)	130 (54)	A3-SGE-R
GG	.004 - 10.1	.015 - 38.4	.25 - 637	125	65 (4.5)	130 (54)	A3-SGE-R
G2G	.007 - 18.23	.03 - 69.0	.46 - 1150	125	65 (4.5)	130 (54)	A3-SGE-R
GH	.010 - 24.9	.038 - 94.2	.63 - 1570	125	65 (4.5)	130 (54)	A3-SGE-R
GK	.011 - 28.5	.043 - 108.0	.72 - 1800	125	65 (4.5)	130 (54)	A3-SGE-R

Model Number Matrix

FLEXFLO® Model Number

A3	FLEXFLO® A3 Peristaltic Metering Pump

Power Cord (operating voltage requirement 96VAC to 264VAC)

4	115V / 60HZ, power cord NEMA 5/15 plug (US)
6	220V / 50HZ, power cord CEE 7/VII plug (EU)
X	No Power Cord

Inlet/Outlet Connection Size, Connection Type, Connection Material

S	3/8” OD x 1/4” ID Tube Compression Fitting, Natural PVDF (Kynar)
M	1/2” Male NPT Fitting, Natural PVDF (Kynar)
B	1/2” ID Tubing Barb Fitting, Natural PVDF (Kynar), available for ND, NEE, NGG, NKL, and G2G only
C	1/2”–3/4” Tri-clamp connections, Natural PVDF (Kynar), available for ND, NEE, NGG, NKL, and G2G only
Q	Quick Disconnect, Natural PVDF (Kynar): ND, NEE, NGG, NKL, and G2G only (Valves sold separately)
MB	1/2” Male BSPT Fitting, Natural PVDF (Kynar)

Pump Tube Material, Pump Tube Size

ND	Flex-A-Prene® .075 ID | .001–2.1 GPH | 125 PSI	**GE**	Flex-A-Thane® .125 ID | .002–4.60 GPH | 65 PSI
NEE	Flex-A-Prene® .093 ID | .002–4.76 GPH | 110 PSI	**GG**	Flex-A-Thane® .187 ID | .004–10.1 GPH | 65 PSI
NGG	Flex-A-Prene® .187 ID | .007–19.02 GPH | 110 PSI	**G2G**	Flex-A-Thane® .187 ID | .007–18.23 GPH | 65 PSI
NK	Flex-A-Prene® .375 ID | .013–33.3 GPH | 125 PSI	**GH**	Flex-A-Thane® .312 ID | .010–24.9 GPH | 65 PSI
NKL	Flex-A-Prene® .375 ID | .013–33.3 GPH | 30 PSI	**GK**	Flex-A-Thane® .375 ID | .011–28.5 GPH | 65 PSI
NHL	Flex-A-Prene® .250 ID | .006–17.39 GPH | 65 PSI	**TH**	Flex-A-Chem® .250 ID | .006–15.06 GPH | 50 PSI
		TK	Flex-A-Chem® .375 ID | .011–28.5 GPH | 50 PSI

Pumhead Orientation

(Blank)	Standard - Left facing pumphead
R	Right facing pumphead
D	Down facing pumphead

A3	**S**	**V**	**2**	**4**	**-**	**S**	**ND**		**Sample Model Number**

Accessories



1/4” x 3/8” “S” Fitting
1/2” Hose Barb “B” Fitting
1/2” MNPT “M” Fitting

Quick Disconnects

*KIT-QSV FKM O-rings	*KIT-QBV FKM	*KIT-QMV FKM
*KIT-QSE EP O-rings	*KIT-QBE EP	*KIT-QME EP
*KIT-QSA Aflas O-rings	*KIT-QBA Aflas	*KIT-QMA Aflas

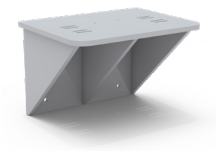

KIT-PSM
Wall Mount Bracket, HDPE



KIT-M12
Two M12 Cables - 9.8 ft.

90010-663 115V/60Hz NEMA 5/15
90010-664 220V/50Hz CEE 7/V11
90010-665 230V/50Hz BS 1363/A
90010-666 240V/50Hz AS 3112
90010-696 230V/60Hz NEMA 6/15
90010-711 115V Lockable

POWER CABLES - 6 ft



KIT-DP3
Profibus Cable, 3 ft



TI40-6V
T.I. Injector, 3/8” OD



C-340-A
FOOT VALVE

Visit Accessory Pages for More Options

P.N. #85000-099 Rev. 7 20240109

5300 Business Drive, Huntington Beach, CA 92649
TEL 714-893-8529 | FAX 714-894-9492 | www.blue-white.com | sales@blue-white.com

ISO 9001:2015 CERTIFIED
SINCE Quality 1957
MADE IN THE USA