CALL TOLL FREE 877-742-2878 FOR SALES AND SUPPORT
Return to BurtProcess.com

albin pump
since 1928

# ALBIN PUMP ALP

*Peristaltic Pumps / Technical Data Sheet*



Ingersoll Rand

# ALP09N
## Data Sheet

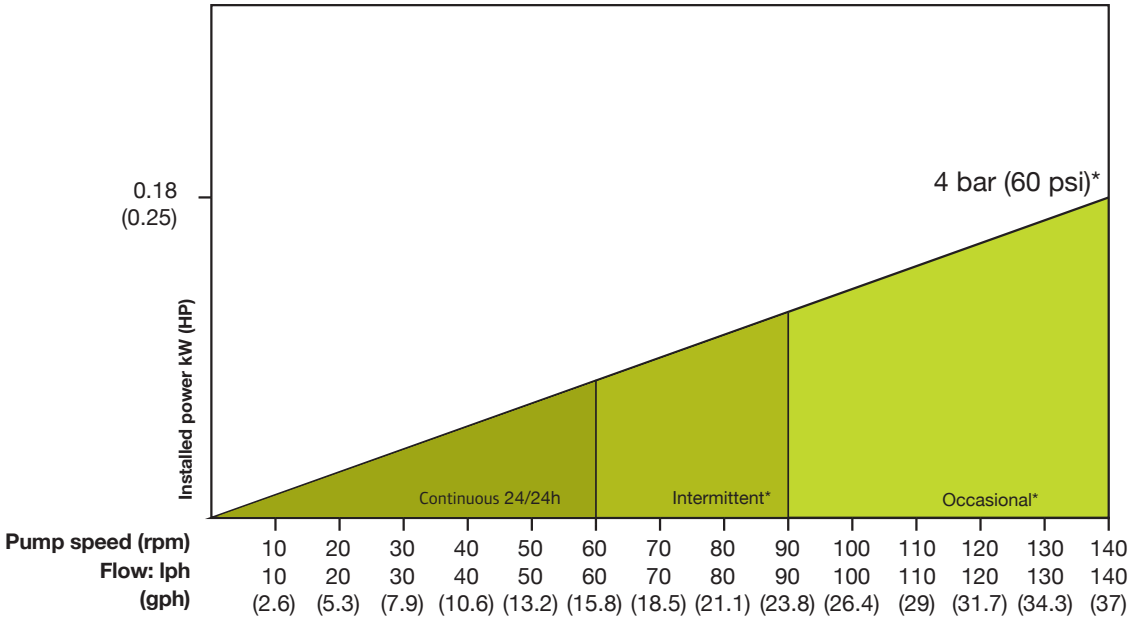


1 rpm = 1.000 L/hr = 0.2642 gph
1 rev = 0.0167 L = 0.0044 gal

Assembly Weight: 12 kg / 26 lbs

**Intermittent use : minimum one hour stop after 2 hours run / *Occasional use : maximum one hour a day*

** 4 bar (60 psi) pressure limit is applicable when using a reinforced hose. The pressure limit when using tubing is 2 bar (30 psi)*

## DIMENSIONS
*mm (Inch)*

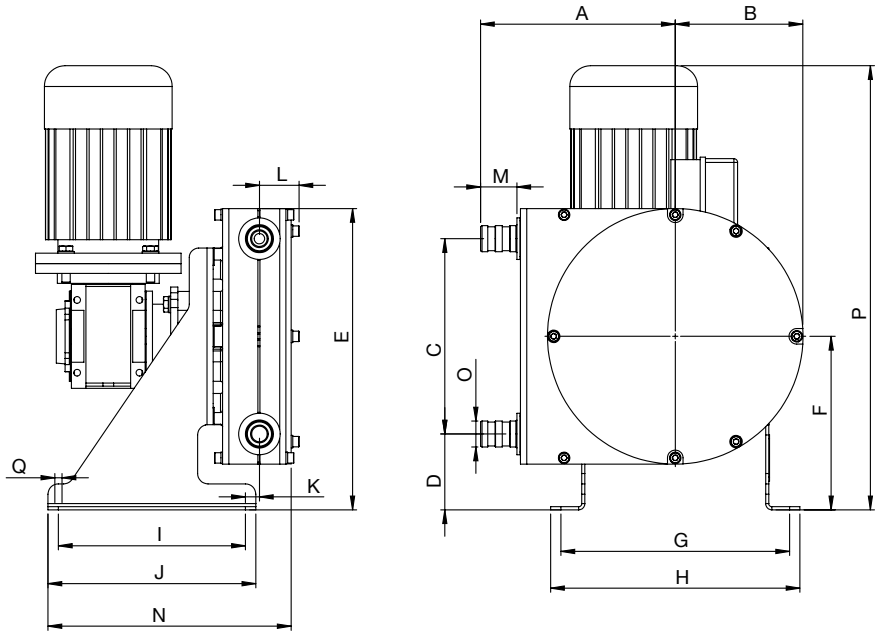


| SIZE | A | B | C | D | E | F | G | H | I | J | K | L | M | N | ØO | P | ØQ |
|---|---|---|---|---|---|---|---|---|---|---|---|---|---|---|---|---|---|
| ALP09N-F * | 133 (5.2) | 89 (3.5) | 132 (5.2) | 62 (2.4) | 217 (8.5) | 128 (5.0) | 165 (6.5) | 184 (7.2) | 156 (6.1) | 175 (6.9) | 12 (0.5) | 31 (1.2) | 24 (0.9) | 207 (8.1) | 16* (0.6) | 374 (14.7) | 6.60 (0.26) |
| ALP09N-VM* | 133 (5.2) | 89 (3.5) | 132 (5.2) | 62 (2.4) | 217 (8.5) | 128 (5.0) | 165 (6.5) | 184 (7.2) | 156 (6.1) | 175 (6.9) | 12 (0.5) | 31 (1.2) | 24 (0.9) | 207 (8.1) | 16* (0.6) | 490 (19.3) | 6.60 (0.26) |

** Hose barb*
** F = Fixed speed*
** VM = Mechanical speed variator*

# ALP13N
## Data Sheet

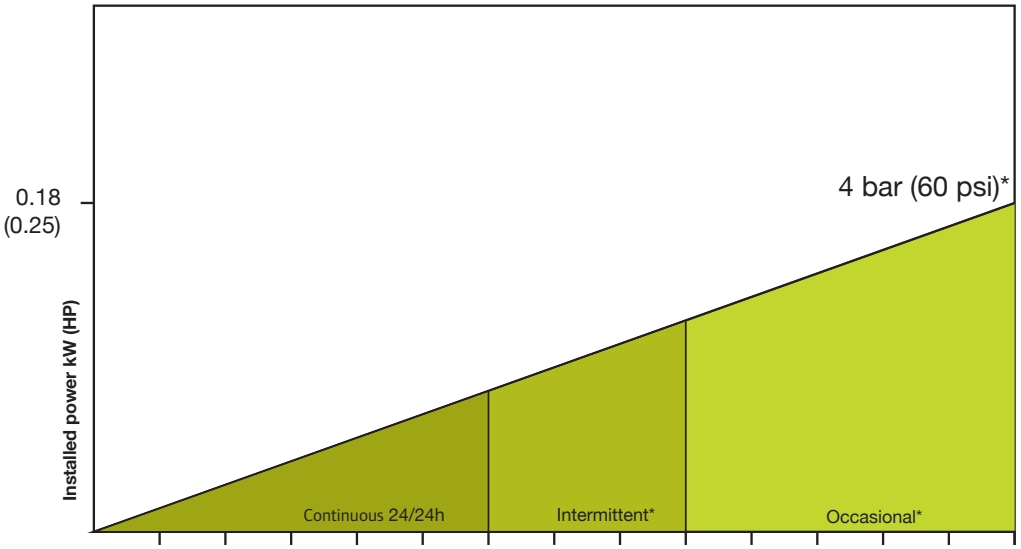


| | | | | | | | | | | | | | | |
|---|---|---|---|---|---|---|---|---|---|---|---|---|---|---|
| **Pump speed (rpm)** | 10 | 20 | 30 | 40 | 50 | 60 | 70 | 80 | 90 | 100 | 110 | 120 | 130 | 140 |
| **Flow: lph** | 25 | 49 | 75 | 99 | 124 | 149 | 174 | 198 | 224 | 248 | 273 | 298 | 323 | 348 |
| **(gph)** | (6.6) | (12.9) | (19.8) | (26.1) | (32.7) | (39.4) | (46) | (52.3) | (59.2) | (65.5) | (72.1) | (78.7) | (85.3) | (91.9) |

1 rpm = 2.483 L/hr = 0.6560 gph
1 rev = 0.0414 L = 0.0109 gal

Assembly Weight: 12 kg / 26 lbs

**Intermittent use : minimum one hour stop after 2 hours run / *Occasional use : maximum one hour a day*

** 4 bar (60 psi) pressure limit is applicable when using a reinforced hose. The pressure limit when using tubing is 2 bar (30 psi)*

## DIMENSIONS
*mm (Inch)*

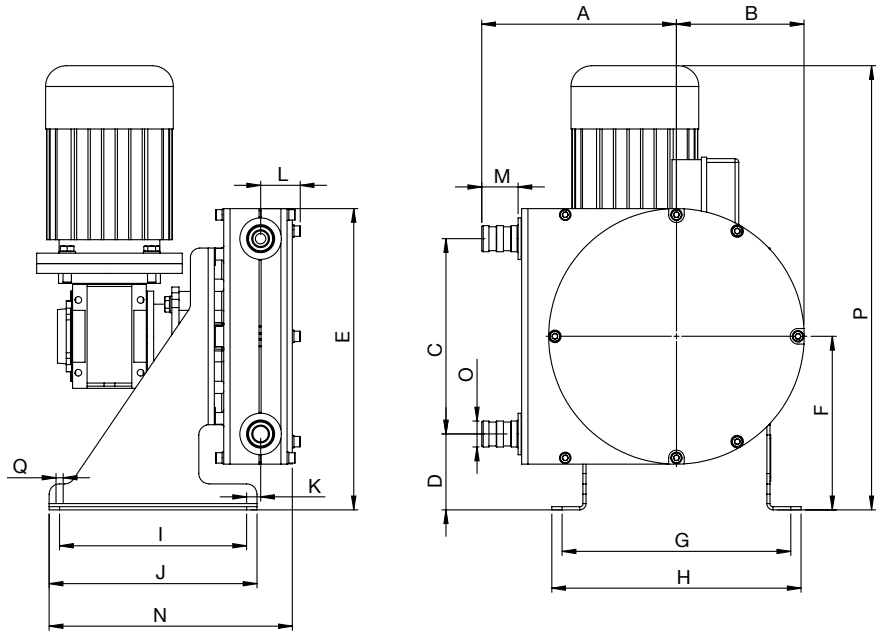


| SIZE | A | B | C | D | E | F | G | H | I | J | K | L | M | N | ØO | P | ØQ |
|---|---|---|---|---|---|---|---|---|---|---|---|---|---|---|---|---|---|
| ALP13N-F* | 133 (5.2) | 89 (3.5) | 132 (5.2) | 62 (2.4) | 217 (8.5) | 128 (5.0) | 165 (6.5) | 184 (7.2) | 156 (6.1) | 175 (6.9) | 12 (0.5) | 31 (1.2) | 24 (0.9) | 207 (8.1) | 16* (0.6) | 374 (14.7) | 6.60 (0.26) |
| ALP13N-VM* | 133 (5.2) | 89 (3.5) | 132 (5.2) | 62 (2.4) | 217 (8.5) | 128 (5.0) | 165 (6.5) | 184 (7.2) | 156 (6.1) | 175 (6.9) | 12 (0.5) | 31 (1.2) | 24 (0.9) | 207 (8.1) | 16* (0.6) | 490 (19.3) | 6.60 (0.26) |

** Hose barb*
** F = Fixed speed*
** VM = Mechanical speed variator*

# ALP17N
## Data Sheet

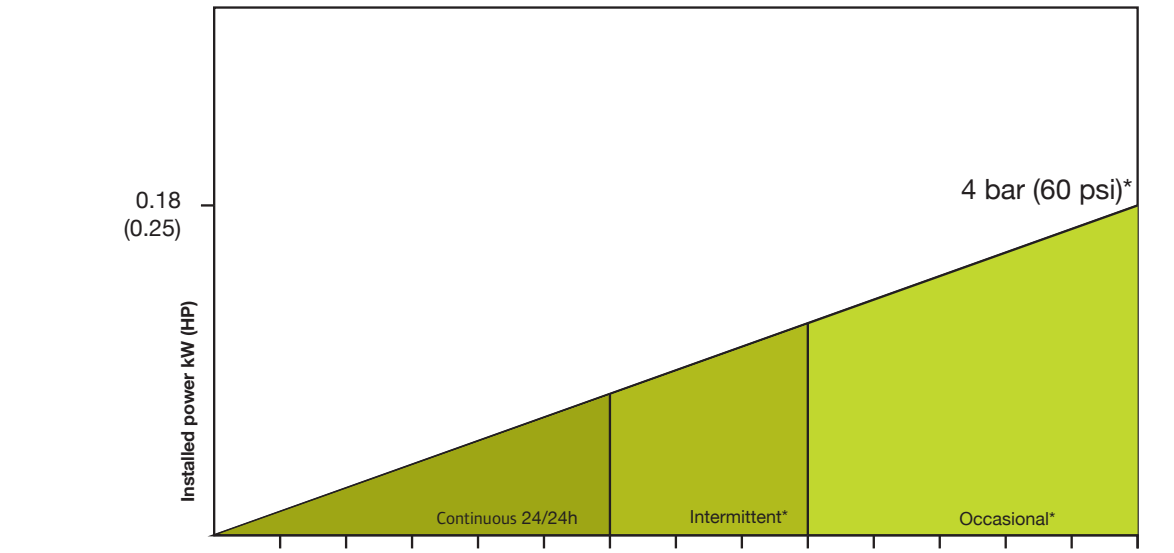


1 rpm = 6.500 L/hr = 1.7171 gph
1 rev = 0.1083 L = 0.0286 gal

Assembly Weight: 15 kg / 33 lbs

**Intermittent use : minimum one hour stop after 2 hours run / *Occasional use : maximum one hour a day*

** 4 bar (60 psi) pressure limit is applicable when using a reinforced hose. The pressure limit when using tubing is 2 bar (30 psi)*

## DIMENSIONS
*mm (Inch)*

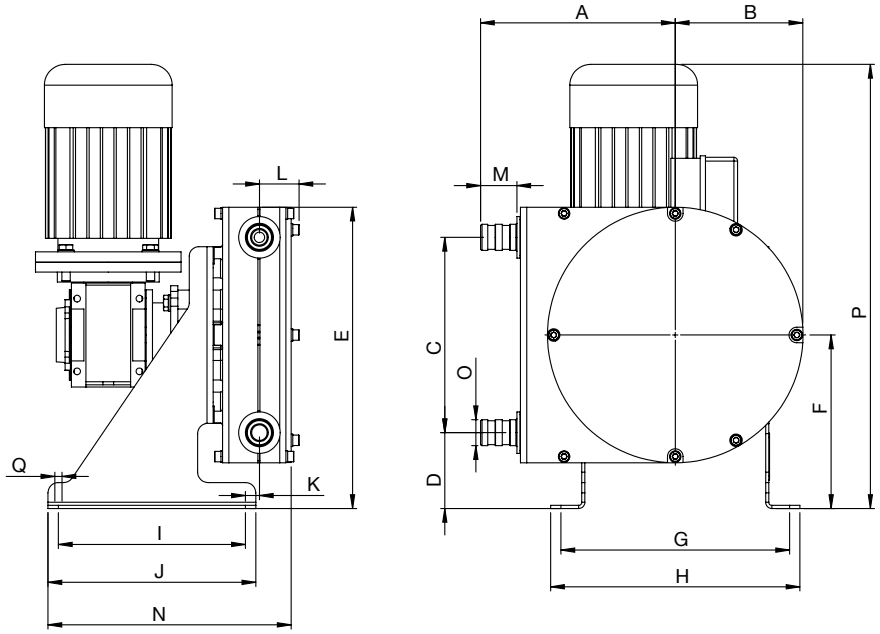


| SIZE | A | B | C | D | E | F | G | H | I | J | K | L | M | N | ØO | P | ØQ |
|---|---|---|---|---|---|---|---|---|---|---|---|---|---|---|---|---|---|
| ALP17N-F* | 187 (7.4) | 123 (4.8) | 188 (7.4) | 73 (2.9) | 290 (11.4) | 167 (6.6) | 220 (8.7) | 240 (9.4) | 180 (7.0) | 200 (7.9) | 14 (0.5) | 38 (1.5) | 35 (1.4) | 234 (9.2) | 25* (1.0) | 428 (16.5) | 7 (0.3) |
| ALP17N-VM* | 187 (7.4) | 123 (4.8) | 188 (7.4) | 73 (2.9) | 290 (11.4) | 167 (6.6) | 220 (8.7) | 240 (9.4) | 180 (7.0) | 200 (7.9) | 14 (0.5) | 38 (1.5) | 35 (1.4) | 234 (9.2) | 25* (1.0) | 543 (21.4) | 7 (0.3) |

** Hose barb*
** F = Fixed speed*
** VM = Mechanical speed variator*

# ALP25N
## Data Sheet

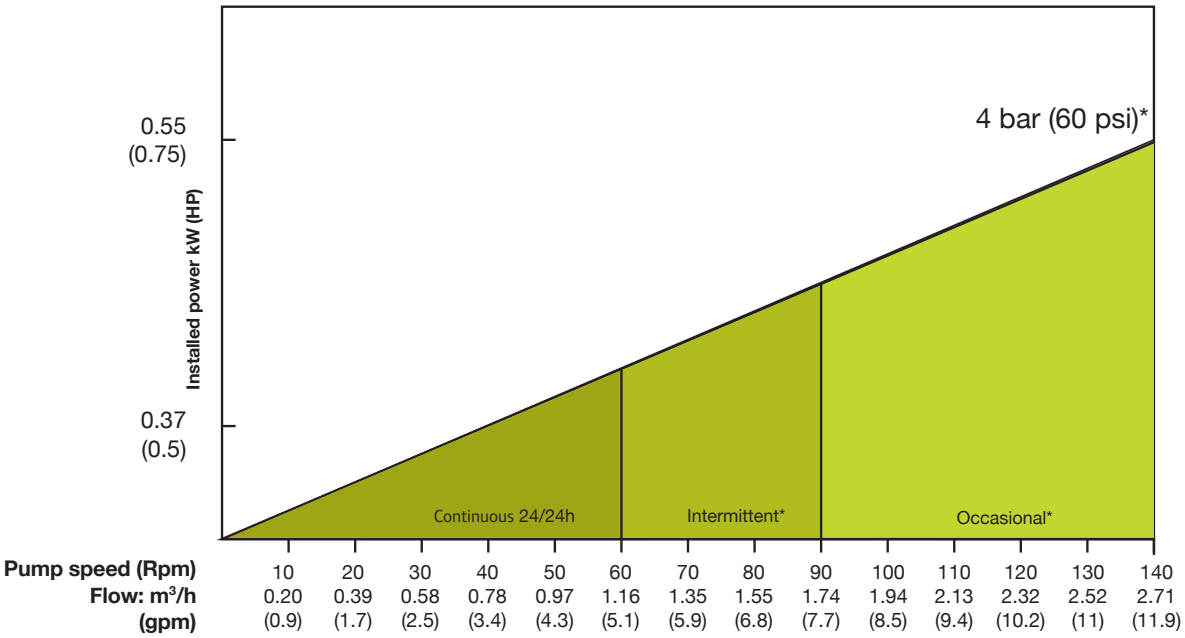


| Pump speed (Rpm) | 10 | 20 | 30 | 40 | 50 | 60 | 70 | 80 | 90 | 100 | 110 | 120 | 130 | 140 |
|---|---|---|---|---|---|---|---|---|---|---|---|---|---|---|
| Flow: m³/h | 0.20 | 0.39 | 0.58 | 0.78 | 0.97 | 1.16 | 1.35 | 1.55 | 1.74 | 1.94 | 2.13 | 2.32 | 2.52 | 2.71 |
| (gpm) | (0.9) | (1.7) | (2.5) | (3.4) | (4.3) | (5.1) | (5.9) | (6.8) | (7.7) | (8.5) | (9.4) | (10.2) | (11) | (11.9) |

1 rpm = 0.0193 m³/hr = 0.0852 gpm
1 rev = 0.3224 L = 0.0852 gal

Assembly Weight: 55 kg / 121 lbs

**Intermittent use : minimum one hour stop after 2 hours run / *Occasional use : maximum one hour a day*

** 4 bar (60 psi) pressure limit is applicable when using a reinforced hose. The pressure limit when using tubing is 2 bar (30 psi)*

## DIMENSIONS
*mm (Inch)*

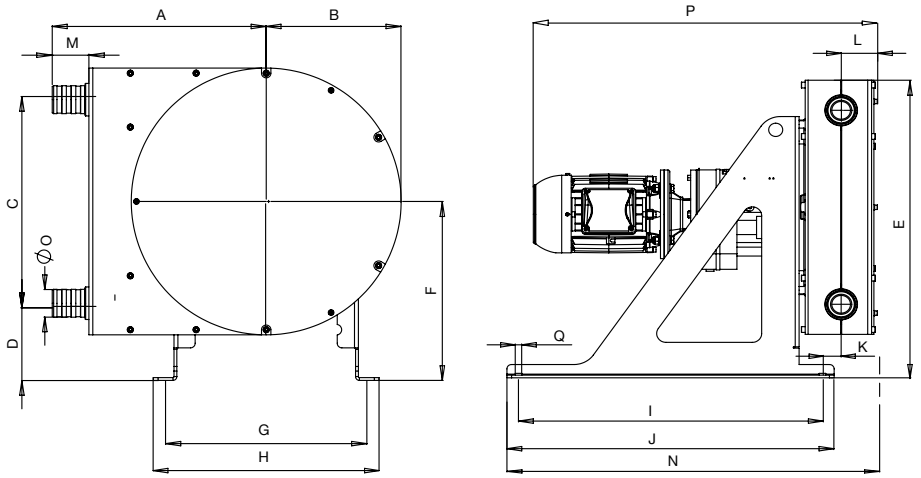


| SIZE | A | B | C | D | E | F | G | H | I | J | K | L | M | N | ØO | P | ØQ |
|---|---|---|---|---|---|---|---|---|---|---|---|---|---|---|---|---|---|
| ALP25N-F* | 275 (10.8) | 165 (6.5) | 256 (10.0) | 90 (3.5) | 383 (15.0) | 218 (8.6) | 240 (9.4) | 270 (10.6) | 400 (15.7) | 440 (17.3) | 18 (0.70) | 49 (1.9) | 48 (1.9) | 482 (19) | 38* (1.5) | 605 (23.81) | 11 (0.4) |
| ALP25N-VM* | 275 (10.8) | 165 (6.5) | 256 (10.0) | 90 (3.5) | 383 (15.0) | 218 (8.6) | 240 (9.4) | 270 (10.6) | 400 (15.7) | 440 (17.3) | 18 (0.70) | 49 (1.9) | 48 (1.9) | 482 (19) | 38* (1.5) | 695 (27.4) | 11 (0.4) |

** Hose barb*
** F = Fixed speed*
** VM = Mechanical speed variator*

# ALP30N
## Data Sheet

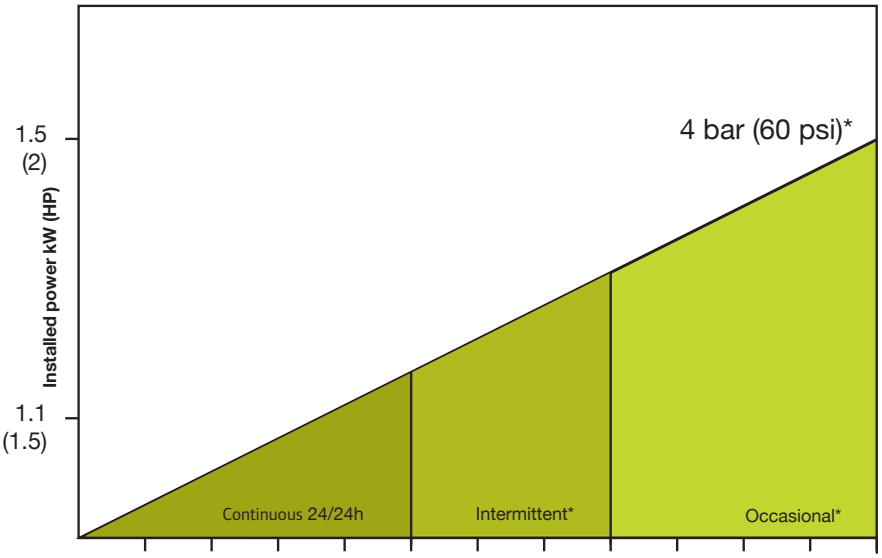


| Pump speed (Rpm) | 10 | 20 | 30 | 40 | 50 | 60 | 70 | 80 | 90 | 100 | 110 | 120 |
|---|---|---|---|---|---|---|---|---|---|---|---|---|
| Flow: m³/h | 0.41 | 0.83 | 1.24 | 1.65 | 2.07 | 2.49 | 2.90 | 3.32 | 3.74 | 4.15 | 4.56 | 4.98 |
| (gpm) | (1.8) | (3.6) | (5.4) | (7.3) | (9.1) | (11) | (12.8) | (14.6) | (16.4) | (18.3) | (20) | (21.9) |

1 rpm = 0.0415 m³/hr = 0.1827 gpm
1 rev = 0.6917 L = 0.1827 gal

Assembly Weight: 95 kg / 209 lbs

**Intermittent use : minimum one hour stop after 2 hours run / *Occasional use : maximum one hour a day*

** 4 bar (60 psi) pressure limit is applicable when using a reinforced hose. The pressure limit when using tubing is 2 bar (30 psi)*

## DIMENSIONS

*mm (Inch)*

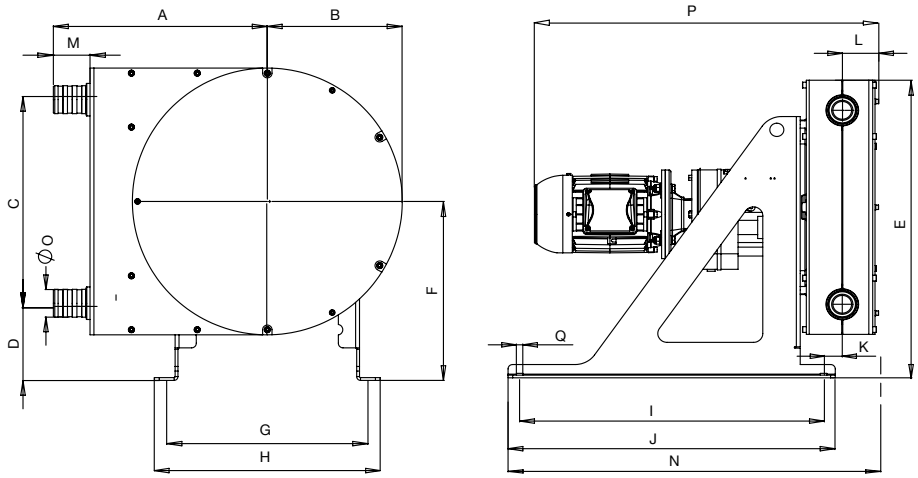


| SIZE | A | B | C | D | E | F | G | H | I | J | K | L | M | N | ØO | P | ØQ |
|---|---|---|---|---|---|---|---|---|---|---|---|---|---|---|---|---|---|
| ALP30N-F* | 348 (13.7) | 226 (8.9) | 354 (13.9) | 153 (6.0) | 557 (21.9) | 319 (12.5) | 330 (13.0) | 386 (15.2) | 550 (21.6) | 590 (23.2) | 23 (0.9) | 58 (2.3) | 60 (2.4) | 651 (25.6) | 45* (1.8) | 685 (27.0) | 14 (0.5) |
| ALP30N-VM* | 348 (13.7) | 226 (8.9) | 354 (13.9) | 153 (6.0) | 557 (21.9) | 319 (12.5) | 330 (13.0) | 386 (15.2) | 550 (21.6) | 590 (23.2) | 23 (0.9) | 58 (2.3) | 60 (2.4) | 651 (25.6) | 45* (1.8) | 795 (31.3) | 14 (0.5) |

** Hose barb*
** F = Fixed speed*
** VM = Mechanical speed variator*

# ALP45N
## Data Sheet

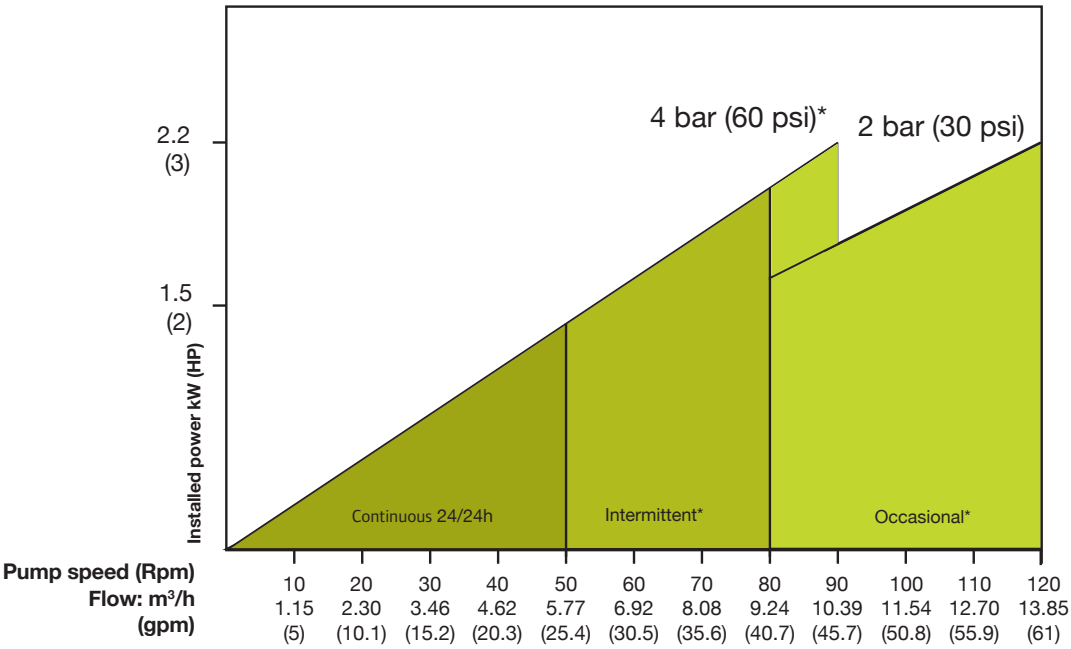


1 rpm = 0.1154 m³/hr = 0.5081 gpm
1 rev = 1.9233 L = 0.5081 gal

Assembly Weight: 155 kg / 342 lbs

**Intermittent use : minimum one hour stop after 2 hours run / *Occasional use : maximum one hour a day*

** 4 bar (60 psi) pressure limit is applicable when using a reinforced hose. The pressure limit when using tubing is 2 bar (30 psi)*

## DIMENSIONS
*mm (Inch)*

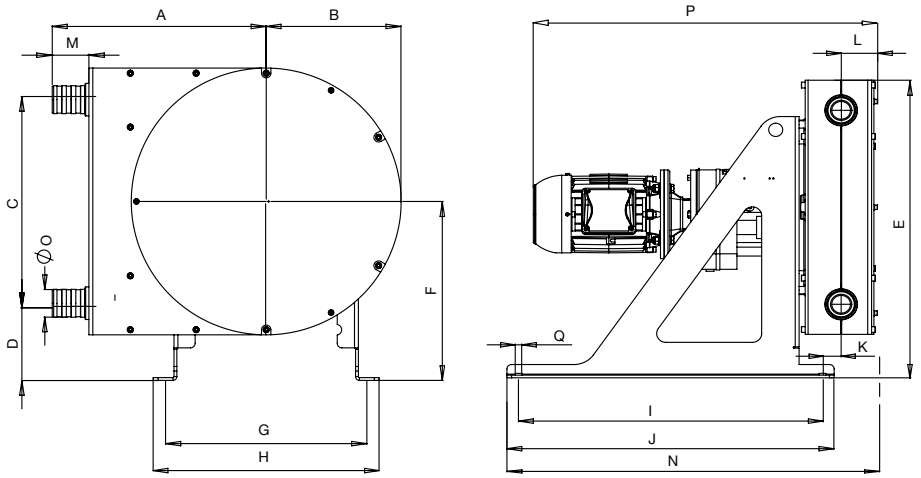


| SIZE | A | B | C | D | E | F | G | H | I | J | K | L | M | N | ØO | P | ØQ |
|---|---|---|---|---|---|---|---|---|---|---|---|---|---|---|---|---|---|
| ALP45N-F* | 455 (17.9) | 287 (11.3) | 438 (17.2) | 166 (6.5) | 672 (26.4) | 385 (15.1) | 420 (16.5) | 480 (18.9) | 650 (26.6) | 700 (27.5) | 41 (1.6) | 78 (3.0) | 78 (3.0) | 793 (31.2) | 60* (2.4) | 736 (29.0) | 14 (0.5) |
| ALP45N-VM* | 455 (17.9) | 287 (11.3) | 438 (17.2) | 166 (6.5) | 672 (26.4) | 385 (15.1) | 420 (16.5) | 480 (18.9) | 650 (26.6) | 700 (27.5) | 41 (1.6) | 78 (3.0) | 78 (3.0) | 788 (31.0) | 60* (2.4) | 847 (33.3) | 14 (0.5) |

** Hose barb*
** F = Fixed speed*
** VM = Mechanical speed variator*

Distributed by:

www.albinpump.com

albinpump@irco.com

## About Ingersoll Rand Inc.

Albin Pump is a brand of Ingersoll Rand and part of the Precision and Science Technologies (PST) business segment. PST consists of a portfolio of complementary, mission critical brands such as Milton Roy®, ARO®, LMI®, Albin Pump, Thomas®, Welch®, Haskel®, Dosatron®, YZ®, Williams®, MP® and Oberdorfer®.

At PST, we deliver solutions for precision dosing and transfer of high value fluids in various markets such as medical, food and beverage, water and hydrogen. For more information, visit www.IRCO.com.

We are committed to using environmentally conscious print practices

©2021 Ingersoll Rand

IRITS-0221-004 EN