CALL TOLL FREE 877-742-2878 FOR SALES AND SUPPORT
Return to BurtProcess.com

albin pump
since 1928

ALBIN PUMP® ALX

"THE EXTRA HOSE PUMPS"



Ingersoll Rand®

THE EXTRA HOSE PUMP ALX150

The Albin Pump® ALX Series pump provides the benefits of other peristaltic pumps, with the two key additional benefits: a much slower speed for a given flow rate; and rotating rollers for soft hose compression. These two features greatly increase hose life and reduce power consumption.



The ALX150 pump generates one of the highest

flow rates of any peristaltic pump in the world. After years of development, the ALX150 was introduced for applications ranging from ship offloading, to high solids slurry transfer, where fast and reliable fluid transfer is key to process profitability.

Our pump uses low friction rollers to compress the hose instead of hard fixed shoes. The advantage of our rollers is they gently rotate as they compress the hose, losing very little power from sliding friction. The pump's soft rollers reduce power consumption dramatically.

Displacing 83.33 litres (20 gallons) per revolution, you can run this pump very slowly to deliver high flow rates up to 150 m3/h (660 gpm) with excellent hose life.

MARKETS AND APPLICATIONS

- ✓ Effluent processing
- ✓ Mining waste/cake transfer
- ✓ Mud slurry transfer
- ✓ Municipal waste transfer
- ✓ Ship offloading
- ✓ Quarry/sand slurry transfer
- ✓ Tailings transfer
- ✓ Thickener underflow slurry transfer
- ✓ Fish boat offloading

FEATURES AND BENEFITS

- ✓ No mechanical seal or stuffing box
- ✓ Reversible flow
- ✓ Damage-free continuous dry running
- ✓ Internal gearbox to reduce overall dimensions
- ✓ Fully self-priming up to -2m (-6.6 ft)
- ✓ Outlet pressures up to 7.5 bar (110 psi)
- ✓ Without liquid lubricant sump
- ✓ Suitable for aggressive or viscous fluids
- ✓ Hoses available: Natural Rubber (NR) and full EPDM

ALX150 HIGH FLOW RATE

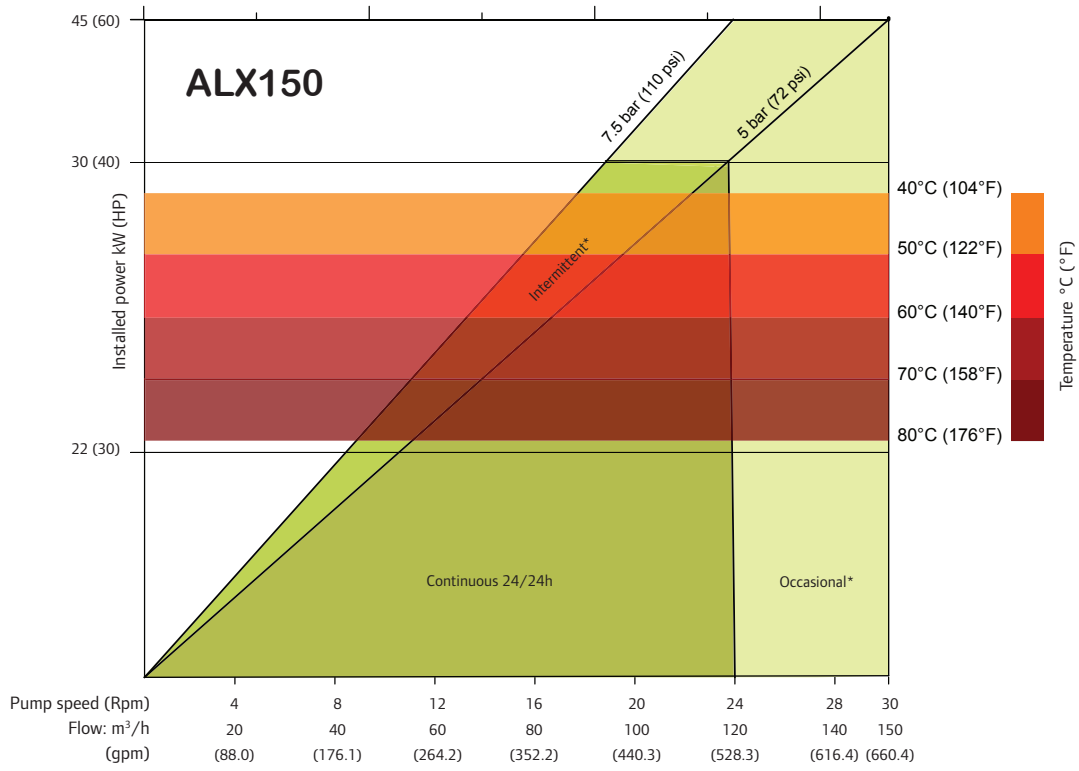

1 rpm = 5.000 m³/hr = 22.0143 gpm
1 rev = 83.3333 L = 22.0143 gal

ALX150 DIMENSIONS Measurements are in millimeters (inches)

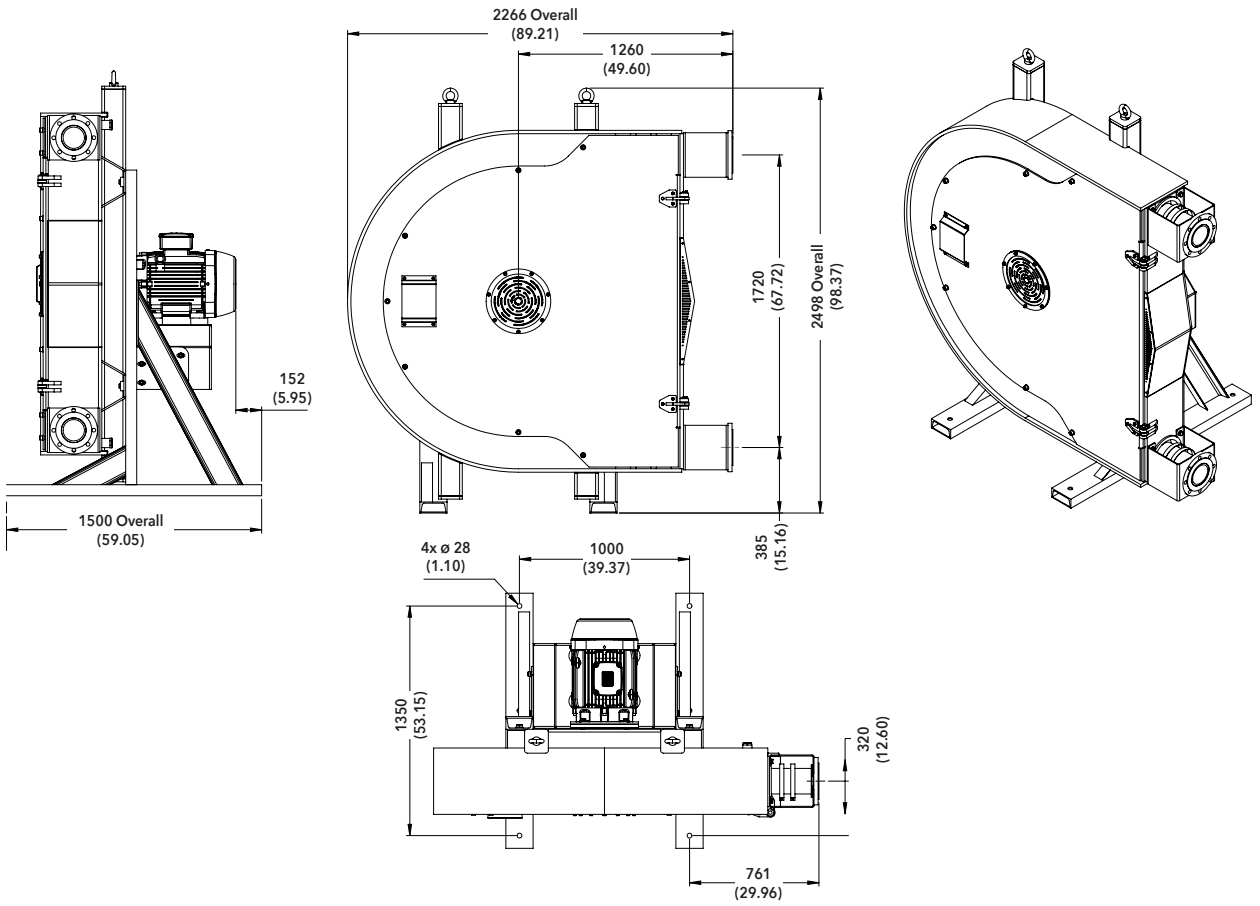

Distributed by:

www.albinpump.com

albinpump@irco.com

About Ingersoll Rand Inc.

Albin Pump is a brand of Ingersoll Rand and part of the Precision and Science Technologies (PST) business segment. PST consists of a portfolio of complementary, mission critical brands such as Milton Roy®, ARO®, LMI®, Albin Pump, Thomas®, Welch®, Haskel®, Dosatron®, YZ®, Williams®, MP® and Oberdorfer®.

At PST, we deliver solutions for precision dosing and transfer of high value fluids in various markets such as medical, food and beverage, water and hydrogen. For more information, visit www.IRCO.com.

We are committed to using environmentally conscious print practices

©2021 Ingersoll Rand
IRITS-0221-011 EN