CALL TOLL FREE 877-742-2878 FOR SALES AND SUPPORT
Return to BurtProcess.com

albin pump
since 1928

ALBIN PUMP ALX

Hose Pumps / Technical Data Sheet

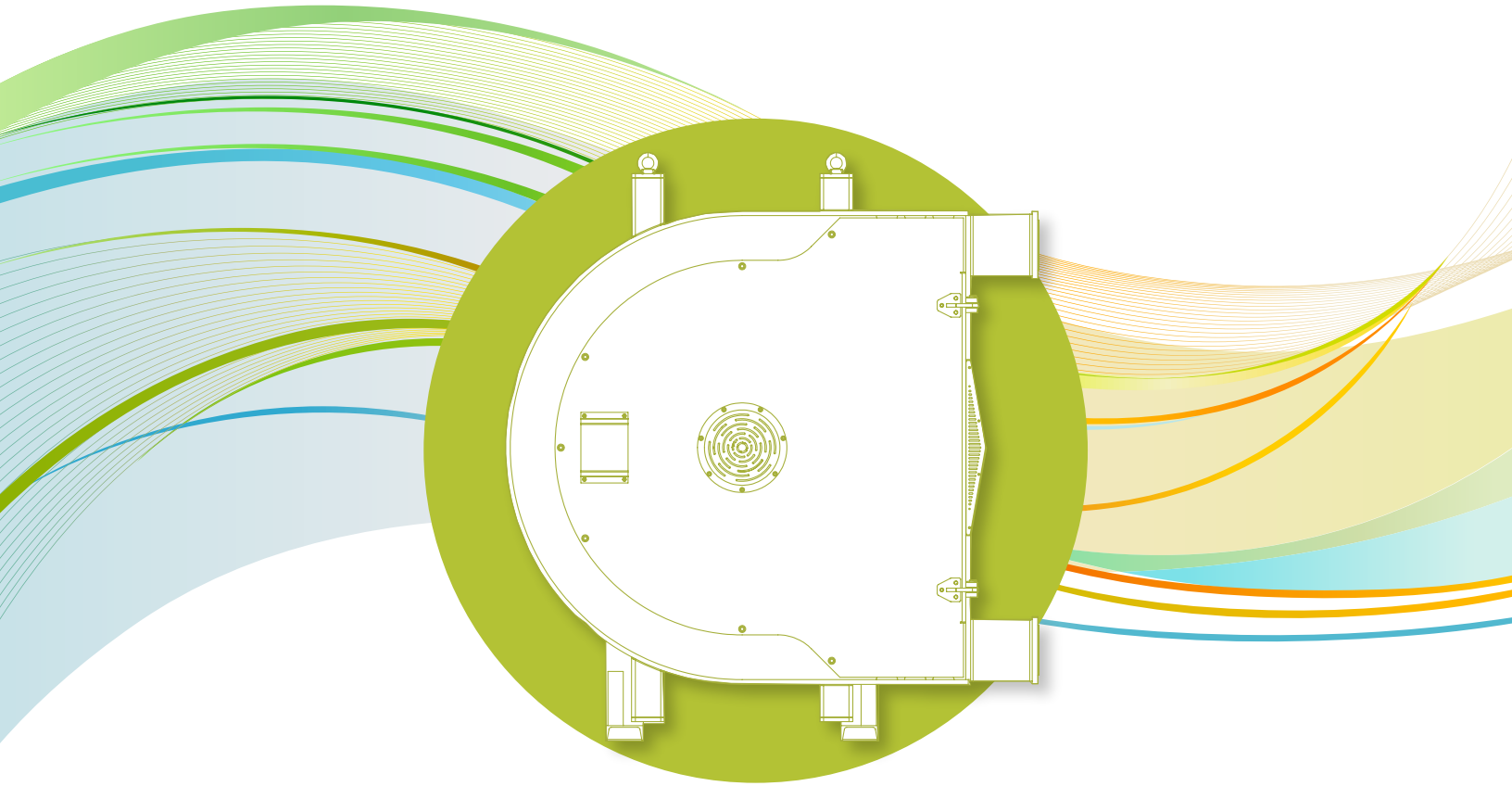

Ingersoll Rand

ALX150
Data Sheet

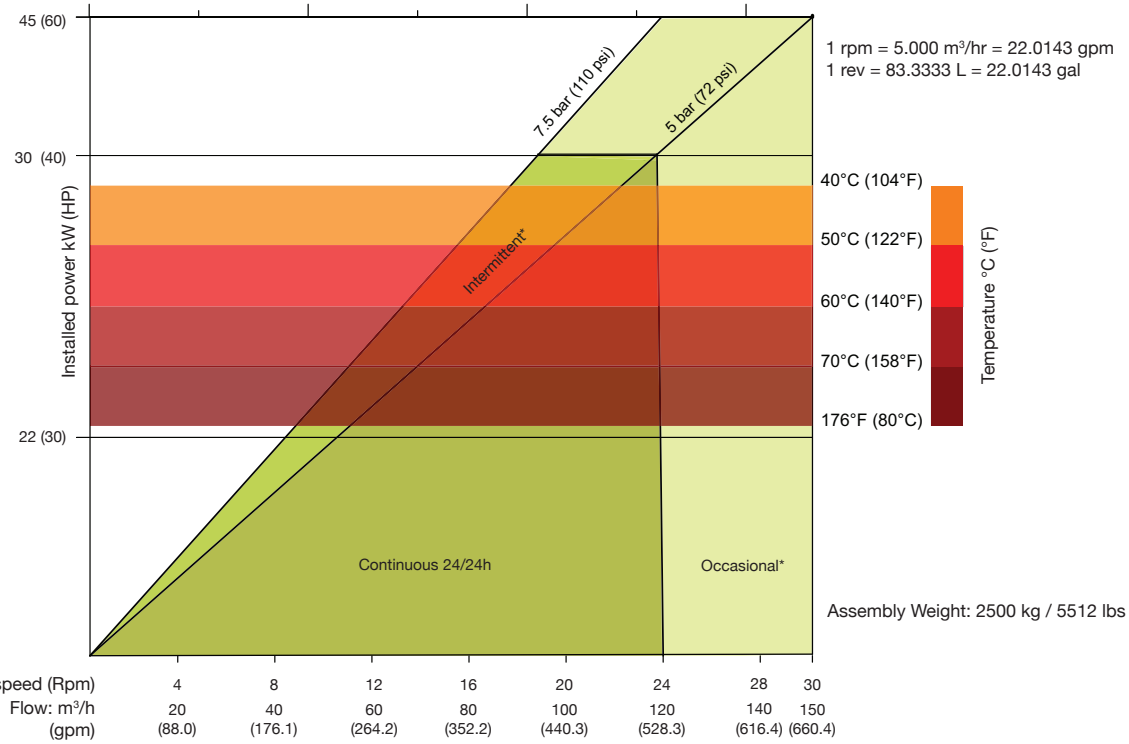

*Intermittent use : minimum one hour stop after 2 hours run / *Occasional use : maximum one hour a day*

DIMENSIONS
mm (Inch)

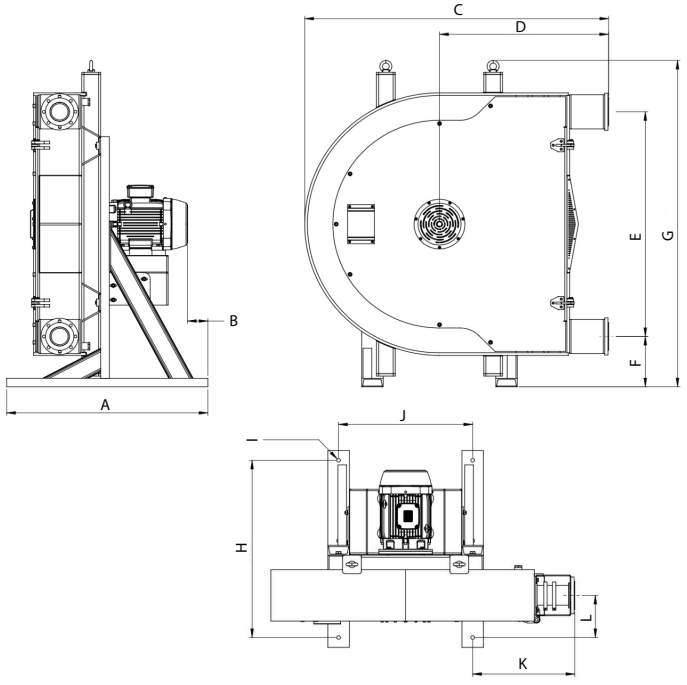

TYPE	A	B	C	D	E	F	G	H	I	J	K	L
ALX150	1500 (59.0)	152 (6.0)	2266 (89.2)	1260 (49.6)	1720 (67.7)	385 (15.1)	2498 (98.3)	53.1 (1350)	4xø28 (4xø1.1)	1000 (39.4)	761 (30)	320 (12.6)

Distributed by:

www.albinpump.com

albinpump@irco.com

About Ingersoll Rand Inc.

Albin Pump is a brand of Ingersoll Rand and part of the Precision and Science Technologies (PST) business segment. PST consists of a portfolio of complementary, mission critical brands such as Milton Roy®, ARO®, LMI®, Albin Pump, Thomas®, Welch®, Haskel®, Dosatron®, YZ®, Williams®, MP® and Oberdorfer®.

At PST, we deliver solutions for precision dosing and transfer of high value fluids in various markets such as medical, food and beverage, water and hydrogen. For more information, visit www.IRCO.com.

We are committed to using environmentally conscious print practices

©2021 Ingersoll Rand

IRITS-0221-007 EN