A Series LifeStar® Aquatic Pump

1/2, 3/4, 1, 1-1/2, 2, 3, 5 HP



Single Phase/
Three Phase -
ODP MOTOR



Three Phase -
TEFC MOTOR

KEY FEATURES

- Ideal for Sensitive Aquatic Environments or Salt Water Systems
- All Wetted Hardware Manufactured from 316 Stainless Steel
- Silicon Carbide Shaft Seal Suitable for Fresh and Salt Water Use
- Corrosion Resistant Housing
- Self-Priming Pump
- Suitable For High Volume Pumping
- Clear High Capacity Basket Strainer Lid for Visual Inspection
- Elevated Base Ensures Better Ventilation and Protection from Flooding
- Perforated HDPE Basket

TECHNICAL INFORMATION

EXPLODED VIEW

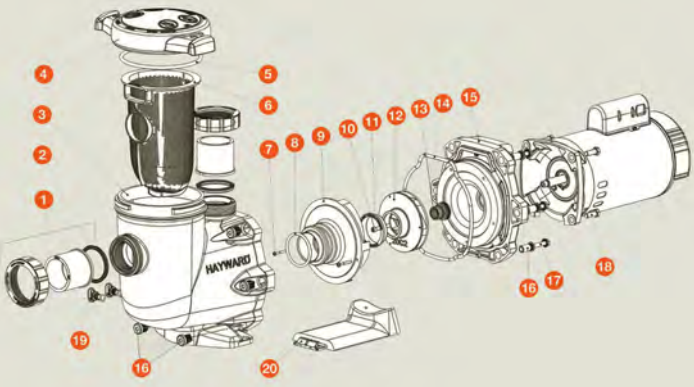

SPECIFICATIONS

PUMP HOUSING	Glass Filled Polypropylene
CONNECTIONS	T2" True Union Socket
MOTOR SHAFT	303 SS (Non-Wetted)
SHAFT FACE SEAL	Silicon Carbide/Silicon Carbide
SHAFT SECONDARY SEAL	EPDM
ALL WETTED HARDWARE	316 SS (Impeller Insert, Impeller Screw and 2 Diffuser Screws)
MAIN HOUSING GASKET	EPDM
MOTOR BOLTS	316 SS
HOUSING BOLTS	316 SS
MOTORS	Single Phase - Open Drip Proof (ODP) Three Phase Totally Enclosed Fan Cooled (TEFC)
HP RATINGS	1/2, 3/4, 1, 1-1/2, 2, 3, 5
STRAINER BASKET	HDPE

A Series
LifeStar® Aquatic Pump
1/2, 3/4, 1, 1-1/2, 2, 3, 5 HP

TECHNICAL INFORMATION, *CONTINUED*

PARTS LIST

1. True Union Connection and Nut with O-Ring
2. Union Gasket
3. Pump Strainer Housing
4. Strainer Cover
5. Strainer Cover O-Ring
6. Strainer Basket
7. Diffuser Screw
8. Diffuser O-Ring
9. Diffuser
10. Impeller Screw
11. Impeller Ring
12. Impellers with Impeller Screws
13. Shaft Seal Assembly
14. Housing O-Ring
15. Seal Plate
16. Housing Insert/Seal Plate Spacer
17. Housing Bolt
18. Motor Bolt
19. Drain Plug with O-Ring
20. Bracket, Motor Support

AVAILABLE SPARE PARTS

- True Union Connections
- Hardware
- Shaft Seal
- Impellers
- Seals
- Strainer Cover and Basket
- Seal Plate
- Base Risers

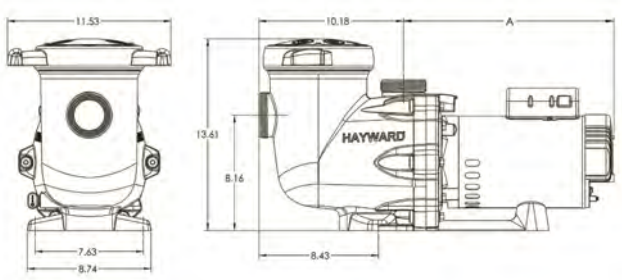

DIMENSIONS

RATED HP	DIM A		
	1 PHASE - ODP in / mm	3 PHASE - ODP in / mm	3 PHASE - TEFC in / mm
1/2	13-5/8 / 346	–	13-13/16 / 351
3/4	13-7/8 / 352	–	14-3/16 / 360
1	14-3/8 / 365	–	14-11/16 / 373
1-1/2	14-7/8 / 378	–	15-5/16 / 389
2	14-7/8 / 378	–	15-5/8 / 397
3	17-1/8 / 435	–	–
5	17-1/8 / 435	17-1/8 / 435	–

Dimensions are subject to change without notice - consult factory for installation information.

TECHNICAL SPECS AND PERFORMANCE DATA

DESCRIPTION	RATED HP	TRUE UNION SOCKET CONNECTORS	SERVICE FACTOR	VOLTAGE SUPPLY	PHASE	MOTOR FRAME
1/2 HP Aquatic Pump	1/2	2"	1.99	115/208-230	1	ODP
				208-230/460	3	TEFC
3/4 HP Aquatic Pump	3/4	2"	1.85	115/208-230	1	ODP
				208-230/460	3	TEFC
1 HP Aquatic Pump	1	2"	1.85	115/208-230	1	ODP
				208-230/460	3	TEFC
1-1/2 HP Aquatic Pump	1-1/2	2"	1.60	115/208-230	1	ODP
				230/460	3	TEFC
2 HP Aquatic Pump	2	2"	1.35	208-230	1	ODP
				230/460	3	TEFC
3 HP Aquatic Pump	3	2"	1.20	208-230	1	ODP
				230/460	3	TEFC
5 HP Aquatic Pump	5	2"	1.00	208-230	1	ODP
				230/460	3	ODP

PUMP PERFORMANCE CURVES

1/2, 3/4, 1, 1-1/2 Rated HP

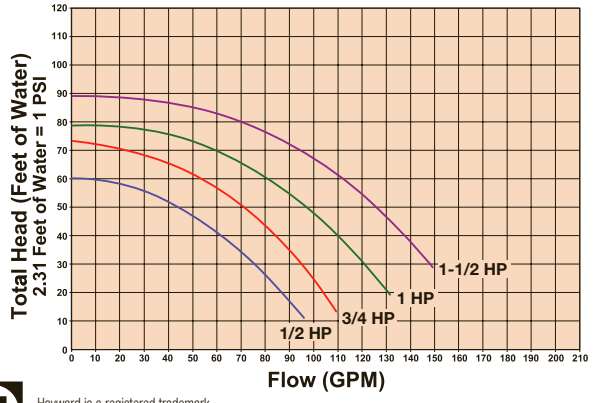

2, 3, 5 Rated HP

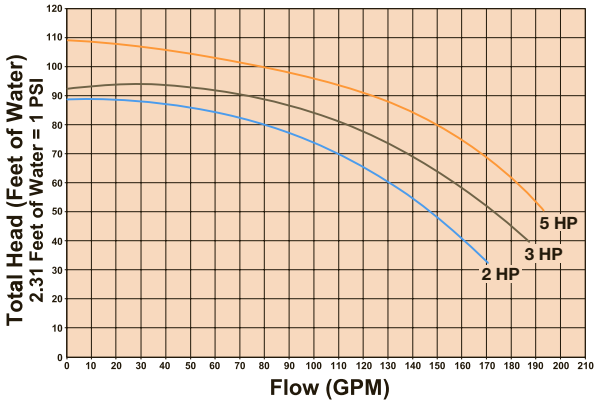

Hayward is a registered trademark of Hayward Industries, Inc.
© 2015 Hayward Industries, Inc.

Contact Hayward Flow Control with questions: **USA:** 1-888-429-4635 • Fax: 1-888-778-8410 • One Hayward Industrial Drive • Clemmons, NC 27012 USA
Canada: 1.888.238.7665 • Fax: 1.905.829.3636 • 2880 Plymouth Drive • Oakville, ON L6H 5R4 Canada • Email: hflowcanada@haywardnet.com
Visit us at: www.haywardflowcontrol.com • E-mail: hflow@haywardnet.com