INDUSTRIES SERVED

- [x] OIL & GAS
- [ ] POWER GENERATION
- [x] CHEMICAL PROCESSING
- [x] WATER RESOURCES
- [x] GENERAL INDUSTRY
- [ ] PULP & PAPER

CALL TOLL FREE 877-742-2878 FOR SALES AND SUPPORT

Return to BurtProcess.com

The KM is a perfect fit for handling most corrosive or acidic applications as they relate to the chemical, specialty chemical and steel industries.

KM

Sealless Magnetic Drive Pump

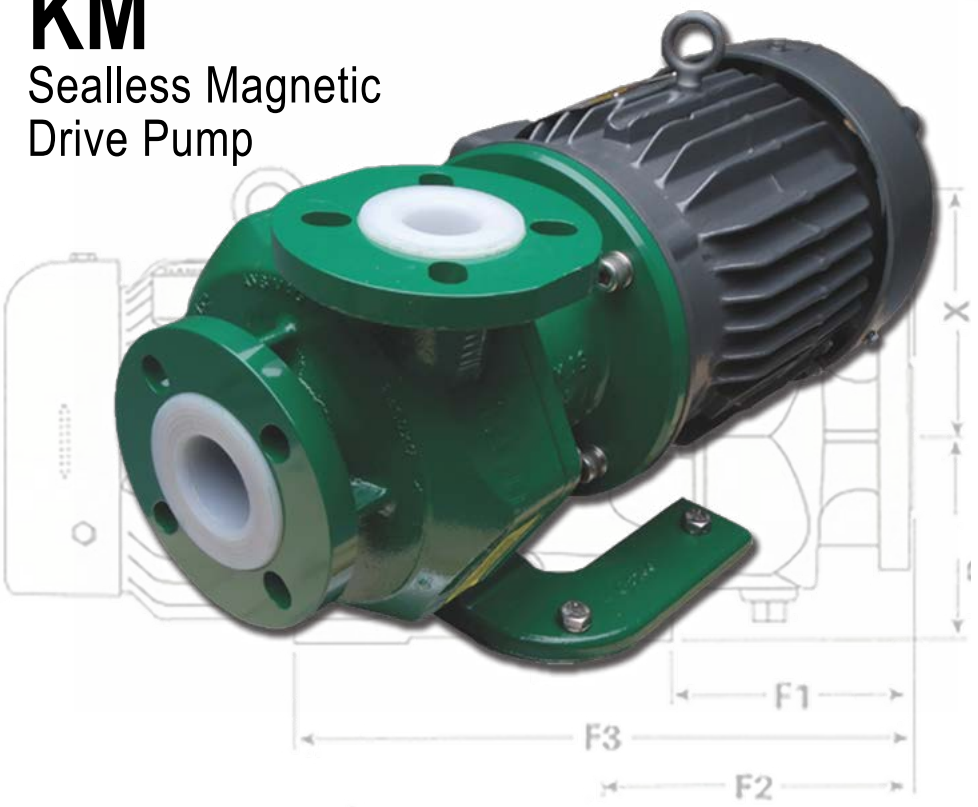

General industry chemical process sealless magnetic drive non-metallic centrifugal end suction pump.

The KM delivers:

- **Flows to: 146 GPM (34 m³ / hr)**
- **Total Dynamic Head: 140 ft (43 m)**

Simple by design, Sundyne Ansimag pumps deliver world class performance in a remarkably compact footprint. With no seals or mechanical couplings to leak or fail, these pumps are the safest choice for those looking to protect personnel and the environment. Additionally, Sundyne sealless pumps feature fewer wetted parts than competitive products and a powder coat finish to prevent corrosion, delivering enhanced durability, optimal reliability and lower through-life costs over traditional sealed pumps. Built to meet exacting ASME / ANSI B73.3 chemical process pump standards, Sundyne sealless pumps are dimensionally interchangeable and represent the easy upgrade option from standard mechanically sealed pumps.

Specifications

Heads To	10 to 140ft	2 to 30m	60HZ: 3 to 43m
Flows To	1 to 147gpm	8 to 27m³/hr	60HZ: 10 to 34m³/hr
Max Power	1 to 7.5hp	1 to 5.5kW	
Temp Range	-20 to 250°F	-29 to 121°C	
Number of Stages	1		
Max Case Working Pressure	150 psi	10.3 bar	
Standard Delivery	2 Weeks		
Bearing Materials Available	Silicon Carbide (Standard) Carbon Graphite (Optional)		
Hydrotest Pressure	225 psig	15.5 bar	
Max Viscosity	700 SSU (150 centistokes)		
Solids Range	Concentration to 20% w/w Size: 1/16” (1.6mm) diameter		
Motor Details	NEMA C-face and IEC B5		
Mounting Configurations	Horizontal close coupled		
Number of Available Hydraulics...	3		
Seal Configurations Available	Sealless		
Available Flanges	Universal Flange fits ANSI Class 150 RF, ISO PN16, and JIS 10 kg/cm2		
Materials of Construction	Carbon Fiber Reinforced ETFE (Standard) Glass Fiber Reinforced PFA (Optional)		

APPLICATIONS

- Ethanol
- Solvents
- Plastics
- Specialty Chemicals
- Wastewater Treatment
- Corrosive Services
- Metal Pickling
- Water Supply
- Acid Transfer
- Flammable Liquids

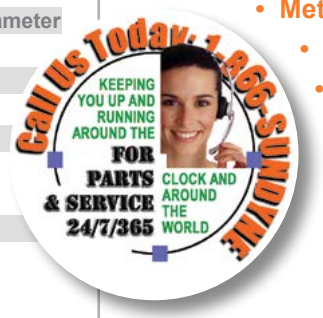

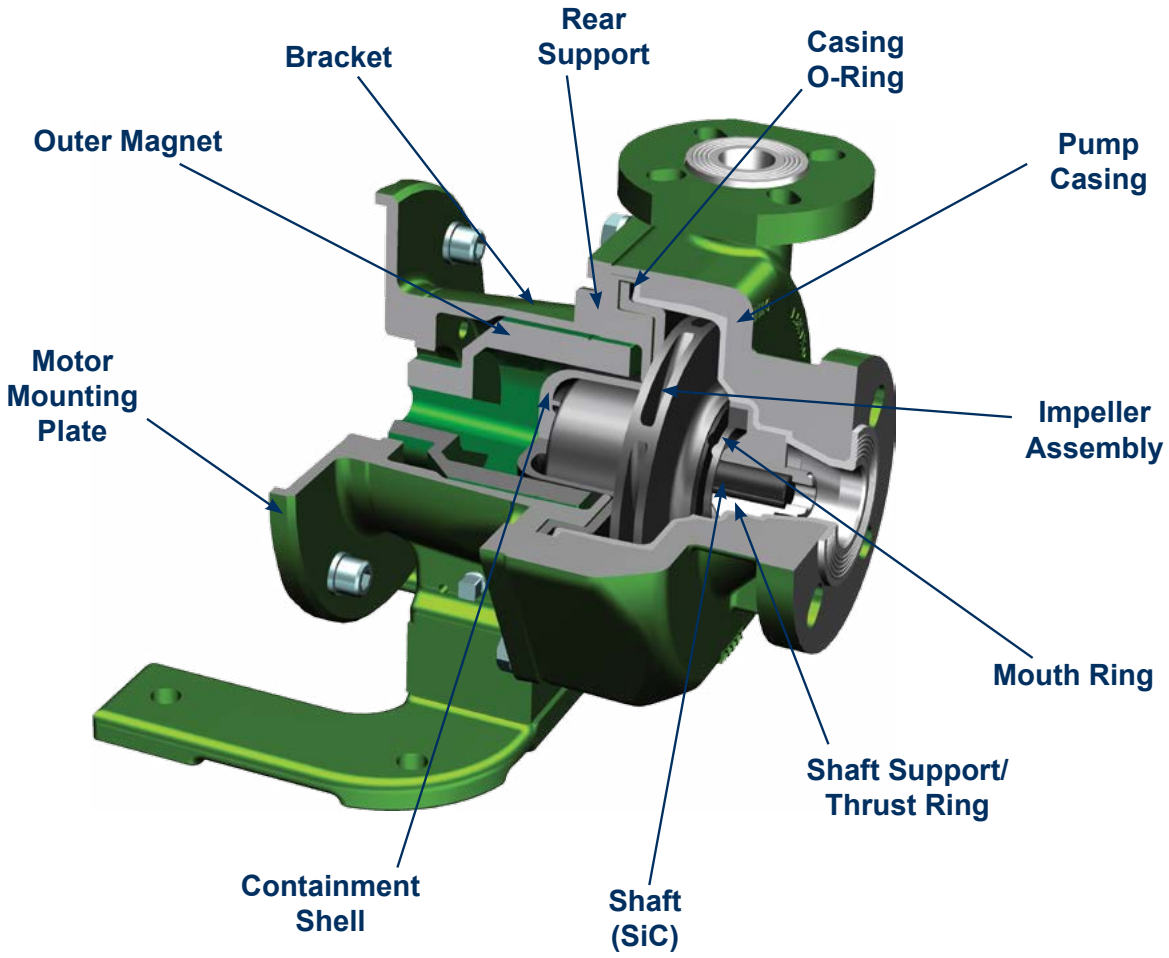

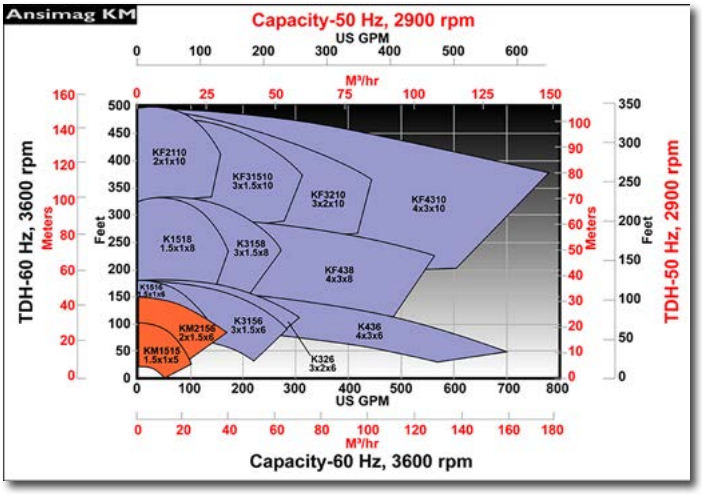

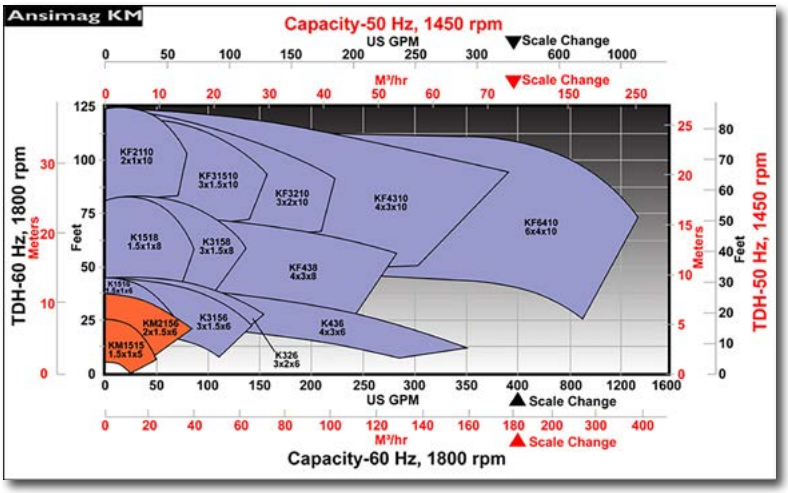

Visit our website at: www.sundyne.com

Sundyne, LLC 14845 W. 64th Ave. Arvada, CO 80007 USA 1-866-SUNDYNE (US and Canada), Ph: +1 303 425 0800 Fax: +1 303 425 0896
Sundyne China Building 1, No. 879 Shen Fu Road XinZhuang Industrial Zone Min Hang District Shanghai, China 201108 Phone: +86 21 5055 5005 Fax: +86 21 5442 5265
Sundyne International S.A. 13-15, Bld. Eiffel - B.P. 30 21604 Longvic Cedex France Ph: +33 (0)3 80 38 33 00 Fax: +33 (0)3 80 38 33 66
Sundyne PPI 201 Ivyland Rd. Ivyland, Pennsylvania 18974 USA Phone: 1 215 675 1600
Sundyne Marelli Bombas, S.R.L. Ctra. Madrid-Toledo, Km.30.8 45200 Illescas Toledo, Spain Ph: +34 925 53 45 00 Fax: +34 925 51 16 00
Sundyne HMD Kontro Sealless Pumps, Ltd. Marshall Rd HPIE Eastbourne East Sussex, BN22 9AN UK Ph: +44 1323 452000 Fax: +44 1323 503369
© 2016 Sundyne, LLC All rights reserved. Other logos and trade names are property of their respective owners. KM_ANSIMAG_A4_DS_POD_v1.0_082816