INDUSTRIES SERVED

- [x] OIL & GAS
- [ ] POWER GENERATION
- [x] CHEMICAL PROCESSING
- [x] WATER RESOURCES
- [x] GENERAL INDUSTRY
- [ ] PULP & PAPER

CALL TOLL FREE 877-742-2878 FOR SALES AND SUPPORT

Return to BurtProcess.com

With ASME / ANSI compliant dimensions, the KV is perfect for handling corrosive and acidic substances in the CPI, specialty chemical and steel industries.

KV

Sealless Magnetic Drive Pump

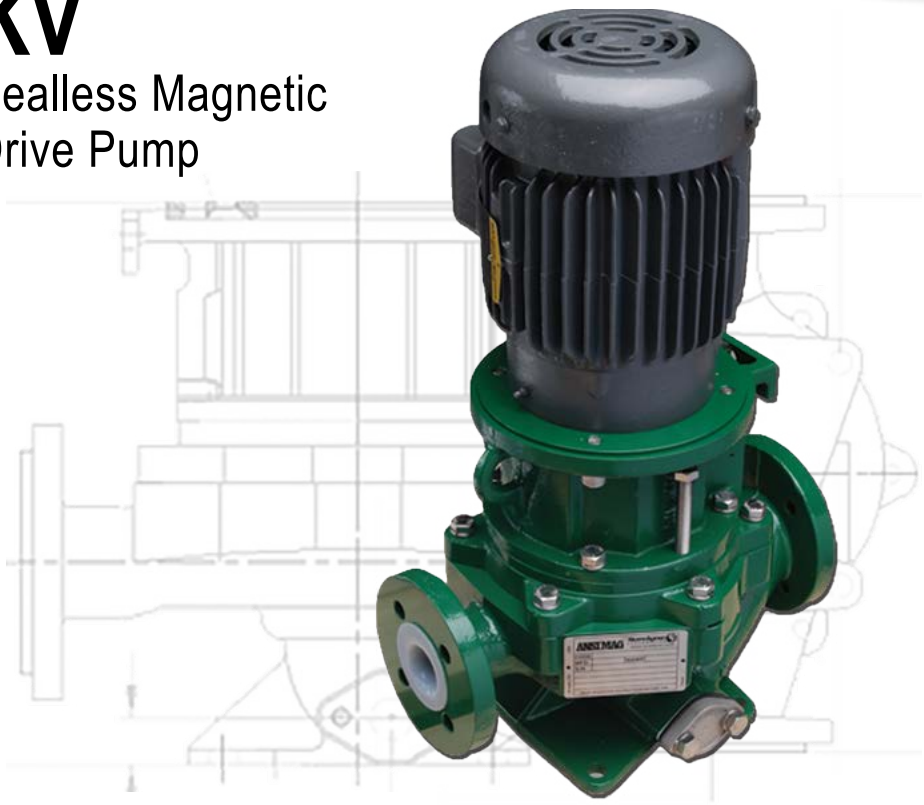

The KV is a sealless magnetic drive, non-metallic centrifugal pump. Featuring a vertical configuration, the KV is perfect for fulfilling processes with limited space requirements.

The KV delivers:

- **Flows to: 325 GPM (74 m^3 / hr)**
- **Total Dynamic Head: 325 ft (99 m)**

Simple by design, Sundyne Ansimag pumps deliver world class performance in a remarkably compact footprint. With no seals or mechanical couplings to leak or fail, these pumps are the safest choice for those looking to protect personnel and the environment. Additionally, Sundyne sealless pumps feature fewer wetted parts than competitive products and a powder coat finish to prevent corrosion, delivering enhanced durability, optimal reliability and lower through-life costs over traditional sealed pumps. Built to meet exacting ASME / ANSI B73.3 chemical process pump standards, Sundyne sealless pumps are dimensionally interchangeable and represent the easy upgrade option from standard mechanically sealed pumps.

Specifications

Heads To	40 to 325ft	8 to 69m	60HZ: 12 to 99m
Flows To	1 to 325gpm	8 to 59m^3/hr	60HZ: 10 to 74m^3/hr
Max Power	30	22	
Temp Range	-20 to 250°F	-30 to 120°C	
Number of Stages	1.0		
Max Case Working Pressure	285 psi	19.3 kg/cm^2	
Standard Delivery	3 Weeks		
Materials of Construction	Carbon Fiber Reinforced ETFE		
Bearing Materials Available	Silicon Carbide Carbon Graphite		
Hydrotest Pressure	430 psi	30 kg/cm^2	
Max Viscosity	1,200 SSU (260 centistokes)		
Industry Standard	ANSI		
Solids Range	to 40%		
Motor Details	NEMA IEC		
Mounting Configurations	Vertical close coupled		
Dimensional Standards	ANSI B73.2		
Number of Available Hydraulics...	3.0		
Seal Configurations Available	Sealless		
Available Flanges	ANSI Class 150 RF ANSI Class 300 RF ISO PN16 JIS 10		

APPLICATIONS

- Offshore
- Water Treatment
- Chemical Processing
- Corrosive Services
- Bulk Chemicals
- Acid Transfer
- Toxic Services
- Agrochemicals
- Aromatics
- Metal Pickling



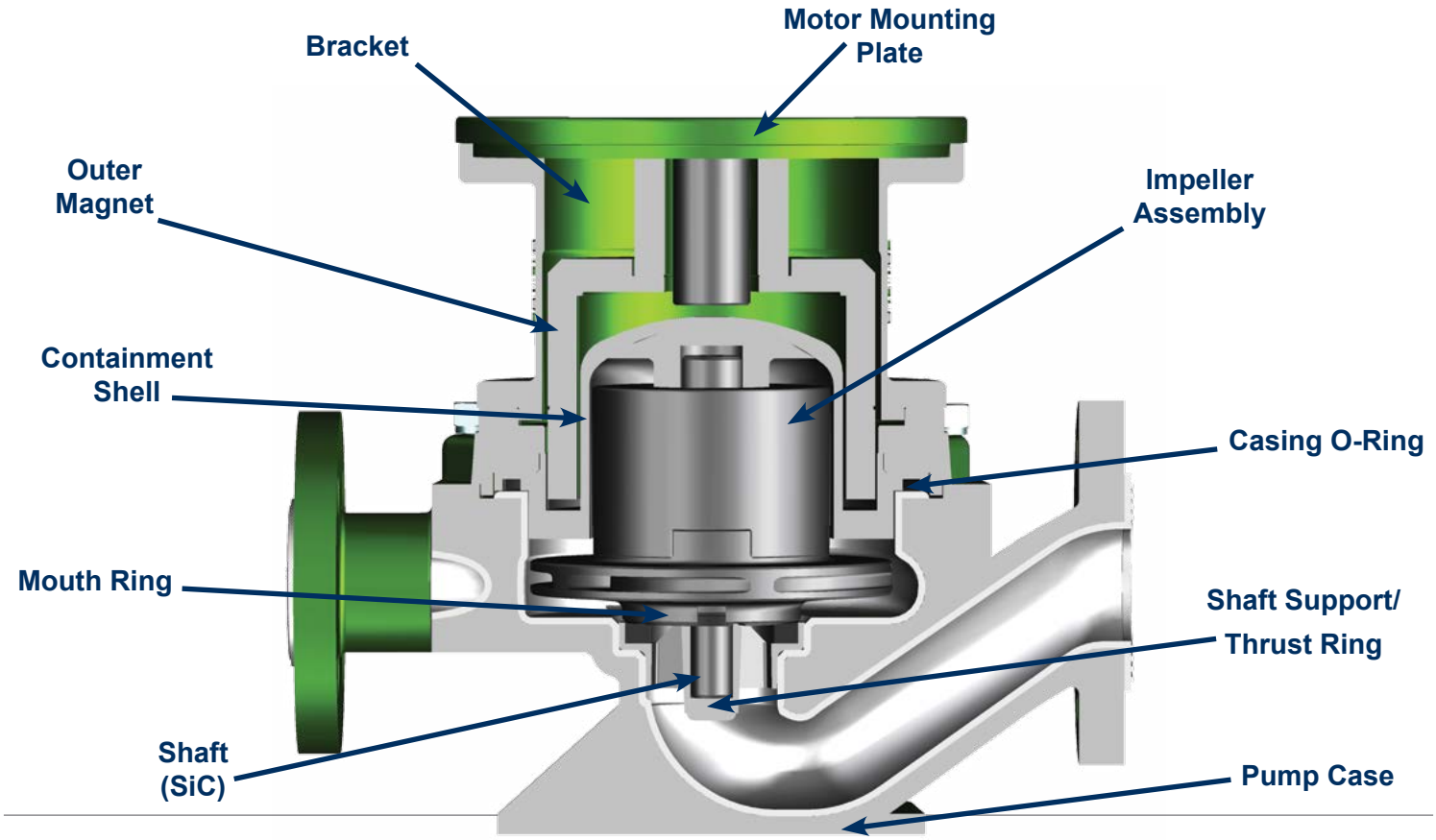

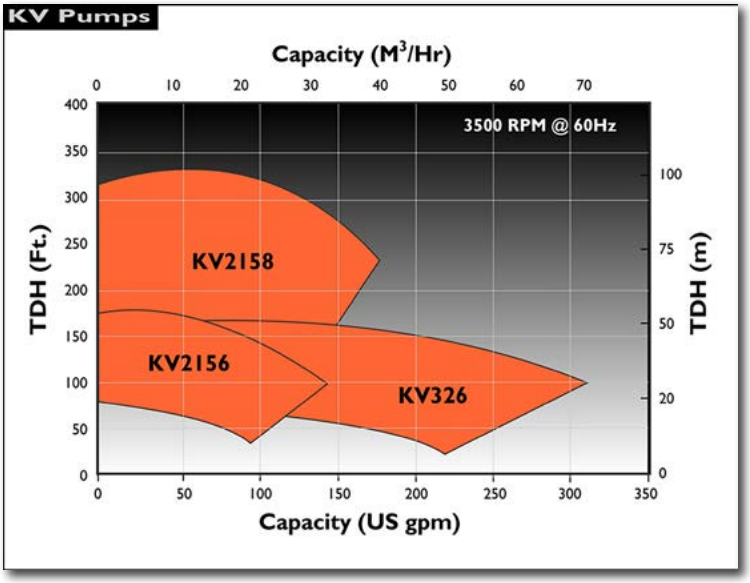

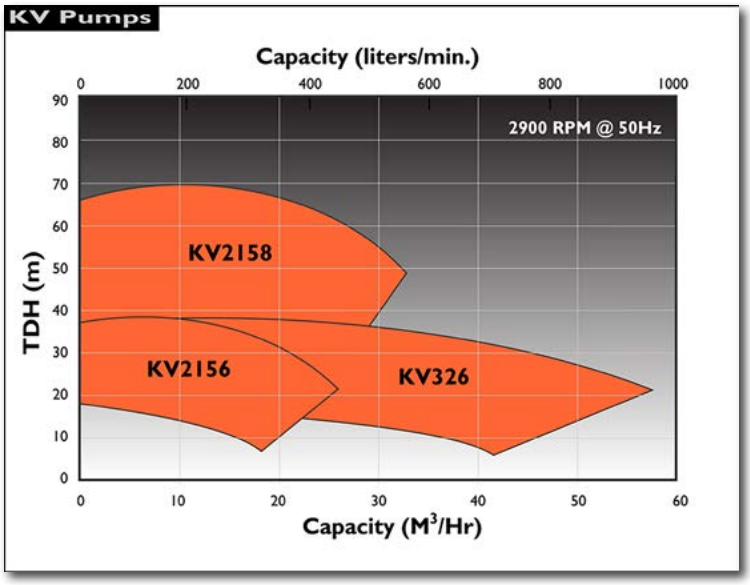

Visit our website at: www.sundyne.com

Sundyne, LLC 14845 W. 64th Ave. Arvada, CO 80007 USA 1-866-SUNDYNE (US and Canada), Ph: +1 303 425 0800 Fax: +1 303 425 0896
Sundyne China Building 1, No. 879 Shen Fu Road XinZhuang Industrial Zone Min Hang District Shanghai, China 201108 Phone: +86 21 5055 5005 Fax: +86 21 5442 5265
Sundyne International S.A. 13-15, Bld. Eiffel - B.P. 30 21604 Longvic Cedex France Ph: +33 (0)3 80 38 33 00 Fax: +33 (0)3 80 38 33 66
Sundyne PPI 201 Ivyland Rd. Ivyland, Pennsylvania 18974 USA Phone: 1 215 675 1600
Sundyne Marelli Bombas, S.R.L. Ctra. Madrid-Toledo, Km.30.8 45200 Illescas Toledo, Spain Ph: +34 925 53 45 00 Fax: +34 925 51 16 00
Sundyne HMD Kontro Sealless Pumps, Ltd. Marshall Rd HPIE Eastbourne East Sussex, BN22 9AN UK Ph: +44 1323 452000 Fax: +44 1323 503369
© 2016 Sundyne, LLC All rights reserved. Other logos and trade names are property of their respective owners. KV_US_ANSIMAG_DS_POD_v1.0_083116