# Self-Priming Engine Driven Utility Pumps

- **Aluminum Construction**
- **Buna-N Mechanical Seal and O-Ring**
- **2˝ to 3˝ NPT Port Sizes**
- **Portable, Lightweight**
- **Solids Handling and Dirty Water Design**
- **Semi-Open, Clog Resistant Impeller**
- **Engine 4-Cycle Options:**
  - **Model GCW2/GCW3: Honda GC160 with Oil Alert**

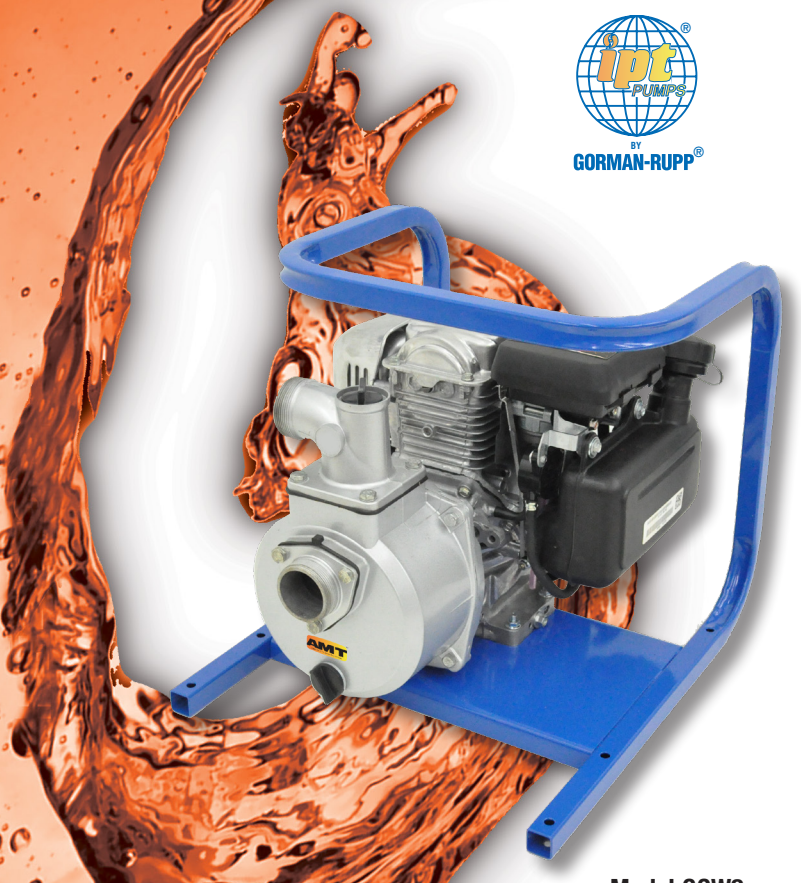


Model GCW2

The AMT/IPT line of Engine Driven Utility pumps offers economy, durability, portability and performance all in one neat package. Ideal for general purpose dirty water dewatering, irrigation, spraying, washdown and agricultural applications. Pumps are designed to handle liquids with solids content or dissolved solids and debris.

## Performance of Engine Driven Utility Pumps

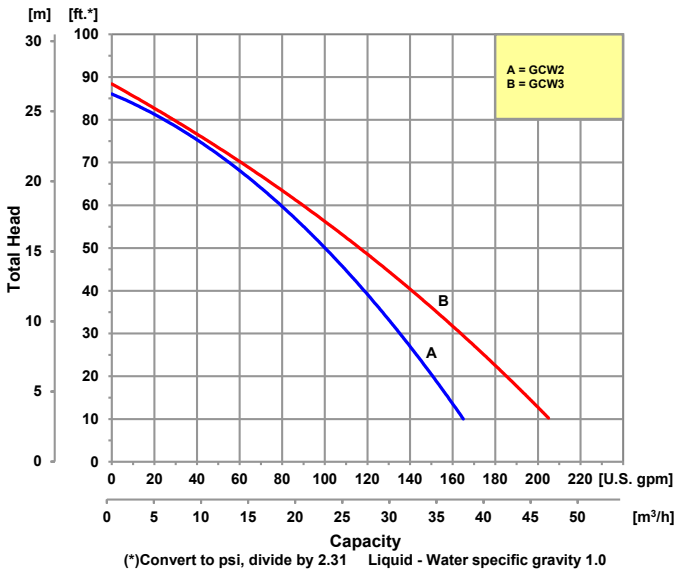


(*)Convert to psi, divide by 2.31 Liquid - Water specific gravity 1.0

A Gorman-Rupp Company
400 Spring Street • Royersford, PA 19468 USA
**www.amtpump.com • 888-amt-pump (268-7867)**

*For use with nonflammable liquids compatible with pump component materials.* Viton® and Teflon® are registered trademarks of E. I. Dupont.

# Engine Driven Utility Pumps

## 2"-3" General Purpose Pumps

| Model | Curve | Driver | Run Time (Hours) | Tank Size (Gal/Ltr.) | Ship Wt. (Lbs.) |
|---|---|---|---|---|---|
| GCW2 | A | Honda GC160 | 1.5 | 0.47/0.71 | 55 |
| GCW3 | B | Honda GC160 | 1.5 | 0.47/0.71 | 60 |

**Construction: Cast Aluminum**

**Maximum Solids Handling Capacity: 1/4" Diameter**

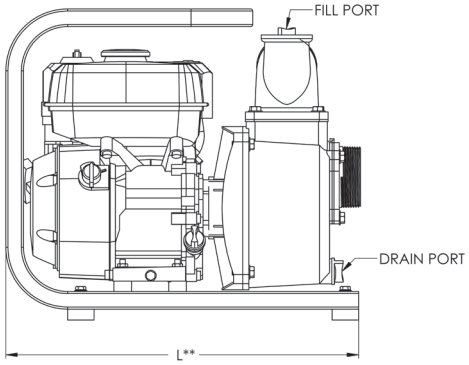


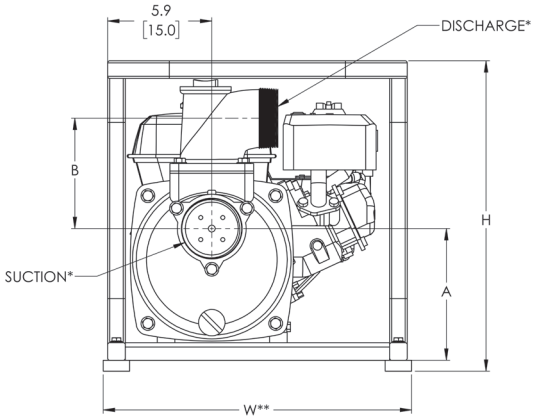


## Standard Features

- Buna-N Mechanical Seal and O-ring
- O-ring Casing Seal
- Semi-open, Clog Resistant Impeller
- Self-primes to 20 Ft.
- Maximum Temperature 180° F
- Maximum Working Pressure 75 PSI
- Delivers up to 38 PSI
- Maximum of 205 GPM
- Includes Heavy Duty Steel Roll Frame, Hose Clamps, Strainer, and Hose Fittings
- QSP – Quick Ship Pump

| Model | HP Class ◆ | Curve | SUC* | DIS* | A | B | L** | W** | H |
|---|---|---|---|---|---|---|---|---|---|
| GCW2 | 5HP | A | 2" | 2" | 6.6 [16.8] | 5.3 [13.3] | 20.0 [50.8] | 17.5 [44.4] | 17.6 [44.7] |
| GCW3 | 5HP | B | 3" | 3" | 7.5 [19.0] | 6.3 [15.9] | 20.0 [50.8] | 17.5 [44.4] | 17.6 [44.7] |

(◆) HP Class represents market category and is not intended to define actual horsepower.
(*) Standard NPT (Female) pipe thread.
(**) This dimension may vary due to engine manufacturer's specifications.
NOTE: Dimensions are in inches (centimeters) and have a tolerance of ± 1/8".



**Manufacturer of AMT & IPT Pumps**
400 Spring Street • Royersford, PA 19468 USA
**www.amtpump.com • 888-amt-pump (268-7867)**

The Gorman-Rupp Company reserves the right to discontinue any model or change specifications at any time without incurring any obligation.
©2012 American Machine and Tool Company. All rights reserved.