4″ Self-Priming Engine Driven Trash Pumps



4" Engine Driven Trash Pump

- **Cast Aluminum with Cast Iron Wearparts**
- **Viton®/Silicon Carbide Mechanical Seal & Buna-N O-Ring/Gasket**
- **4″ NPT Cast Iron Male Port Sizes with 90° Rotatable Discharge Port**
- **Self-Priming up to 20 Feet with Built-In Buna-N Check Valve**
- **Solids Handling and Dirty Water Design**
- **Engine Options: Honda, Kohler Gasoline or Hatz Diesel Engines**
- **4″ Models Feature Base, Rails and 16″ Tires**
- **Maximum Solids Handling up to 2″**
- **Electric Start Option Available**
- **Front Cleanout with Cast Aluminum Handles**

AMT Engine Driven Trash pumps are designed for applications which require high flow and solid handling capability. These pumps are constructed of heavy duty sand cast aluminum components featuring removeable/replaceable cast iron volutes, impellers and wearplates. Simple cleanout design permits easy removal of trash and debris without disconnecting hoses. Pumps are designed to handle liquids with solids content or dissolved solids and debris. Cast iron discharge port rotates in 90° increments. An electric start option is available on many models.

Performance of Engine Driven Trash Pumps

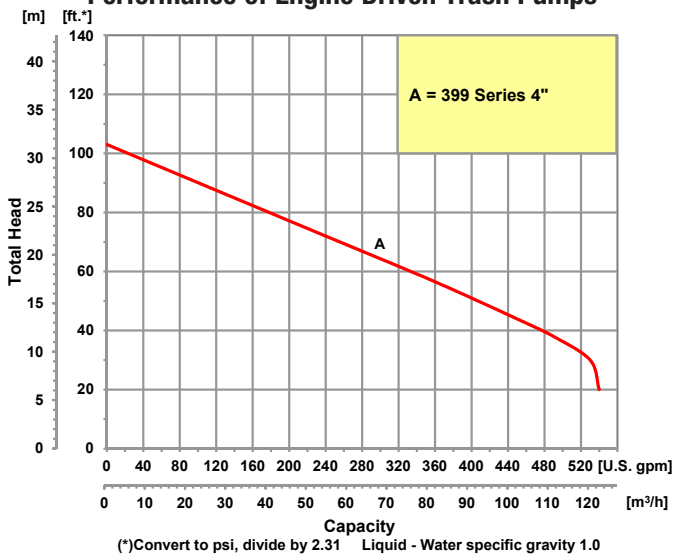

(*)Convert to psi, divide by 2.31 Liquid - Water specific gravity 1.0

AMT
A Gorman-Rupp Company
400 Spring Street • Royersford, PA 19468 USA
www.amtpump.com • 888-amt-pump (268-7867)

For use with nonflammable liquids compatible with pump component materials. Viton® and Teflon® are registered trademarks of E. I. Dupont.

Engine Driven Self-Priming Trash Pumps

4" Trash Pumps

Model	Curve	Port	Driver	Seal	Run Time (Hours)	Tank Size (Gal/Ltr.)	Ship Wt. (Lbs.)
3993-Z6	A	4" NPT	Hatz Diesel 1B50 ++ ▲	Viton®/Sic	1.8	1.32/5.0	300
3994-96	A	4" NPT	Honda OHV GX390 ++ ▲	Viton®/Sic	2.5	1.60/6.1	300
3995-96	A	4" NPT	Kohler CH440 ++ ▲	Viton®/Sic	3.5	1.95/7.0	300

Construction: Aluminum with Cast Iron Wearparts **Maximum Solids Handling Capacity: 2" Diameter**

++ 12V DC Electric Start (Battery Not Included—Use BCI Group: U1 or U2 32 Amp Hour)

▲ Oil Alert Included

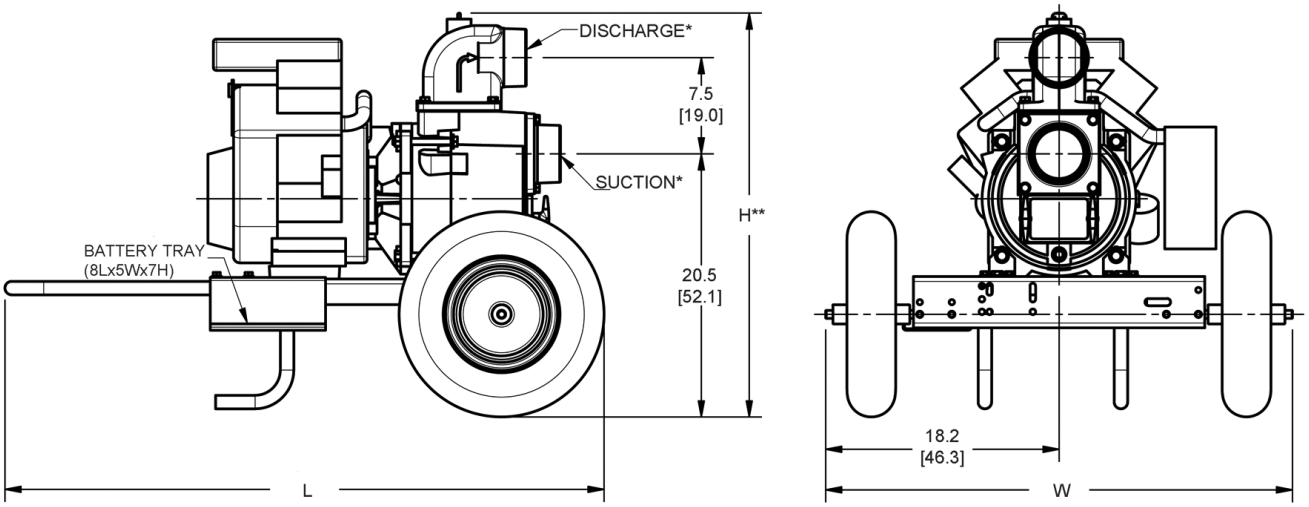

Model	HP Class♦	SUC*	DIS*	L**	W**	H**
399X Series	10/13 HP	4	4	44.4 [112.7]	37.5 [95.2]	30.6 [77.7]

(♦) HP Class represents market category and is not intended to define actual horsepower.
(*) Standard NPT (Female) pipe thread.
(**) This dimension may vary due to engine manufacturer's specifications.
NOTE: Dimensions are in inches (centimeters) and have a tolerance of ± 1/8".

Standard Features

- 4" Cast Iron Male NPT Suction & Discharge Ports
- Viton®/Silicon Carbide Mechanical Seal
- Buna-N O-ring and Casing Seal
- Self-primes to 20 Feet with Built-in Buna Check Valve
- Stainless Steel Shaft Sleeve
- Steel Suction Strainer Included
- Cast Iron Replaceable Volute/Wearplate and Impeller
- Maximum Temperature 180° F
- Maximum Working Pressure 75 PSI
- 4" Models Include Wheel Kit and Base Rails
- Honda Engines are Overhead Valve (OHV) Designs with Low Oil Alert

A Gorman-Rupp Company

Manufacturer of AMT & IPT Pumps
400 Spring Street • Royersford, PA 19468 USA
www.amtpump.com • 888-amt-pump (268-7867)

The Gorman-Rupp Company reserves the right to discontinue any model or change specifications at any time without incurring any obligation.
©2012 American Machine and Tool Company. All rights reserved.

1222