GORMAN-RUPP PUMPS

Self-Priming Engine Driven Trash Pumps



Model
14D1-GX390

- Cast Aluminum Construction
- 2″ to 4″ NPT Port Size
- Solids Handling and Dirty Water Design
- Solids Handling to 2″ Diameter
- Viton®/Silicon Carbide Mechanical Seals
- Self-Priming to 25 Ft.
- Available with 5 HP to 13 HP Honda Gasoline Engine
- Heavy Duty Steel Roll Frame
- Suction Strainer and 90° Discharge Elbow Included

The Gorman-Rupp line of Engine Driven Trash pumps are designed for applications which require high flow efficiency and solids handling capability. Pumps are constructed of heavy duty sand cast aluminum components featuring replaceable ductile iron impeller and steel wearplate. Simple front cleanout design permits easy removal of trash and debris without disconnecting hoses. Pumps are available with Honda gasoline engines. All are furnished with heavy-duty steel roll cages, suction strainers and 90° discharge elbows.

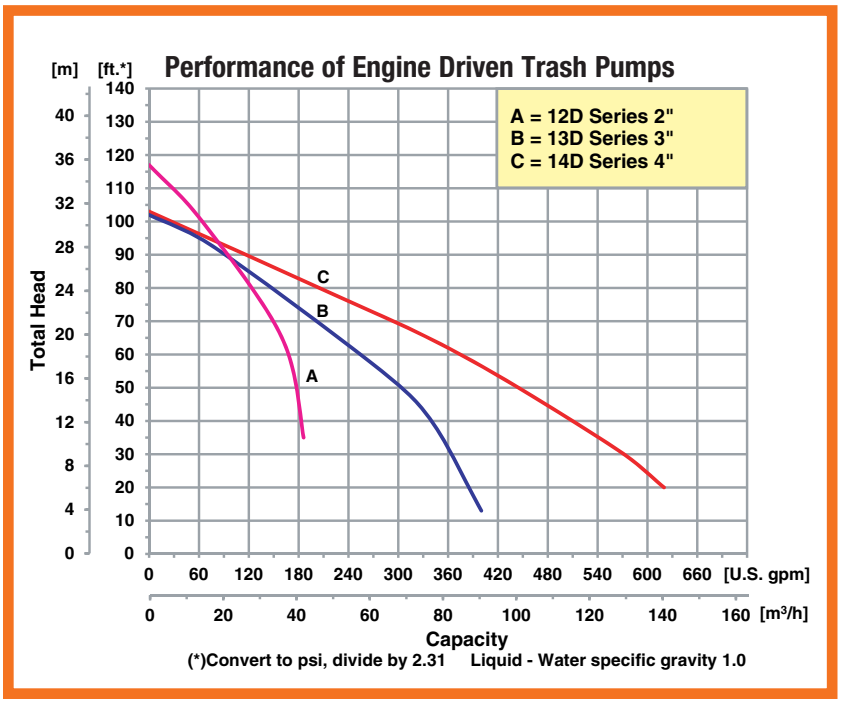

AMT
A Gorman-Rupp Company
400 Spring Street • Royersford, PA 19468 USA
www.amtpump.com • 888-amt-pump (268-7867)

For use with nonflammable liquids compatible with pump component materials. Viton® and Teflon® are registered trademarks of E. I. Dupont.

Self-Priming Engine Driven Trash Pumps

Pump Dimensional & Specification Data

Model	Curve	Driver	Port Size (SUC x DIS)	Seal Type & Elastomer/Faces	Mounting	Run Time (Hours)	Tank Size (Gal/Ltr.)	Ship Wt. (Lbs.)
12D1-GX160	A	Honda GX160▲	2" x 2"	Viton®/Silicon Carbide	Roll Cage	2.0	0.95/3.5	85
13D1-GX270	B	Honda GX270▲	3" x 3"	Viton®/Silicon Carbide	Roll Cage	2.7	1.6/6.1	135
14D1-GX390	C	Honda GX390▲	4" x 4"	Viton®/Silicon Carbide	Roll Cage	1.2	1.7/1.2	265

Construction: Cast Aluminum

Maximum Solids Handling Capacity: Up to 2" Diameter

▲ Oil Alert Included

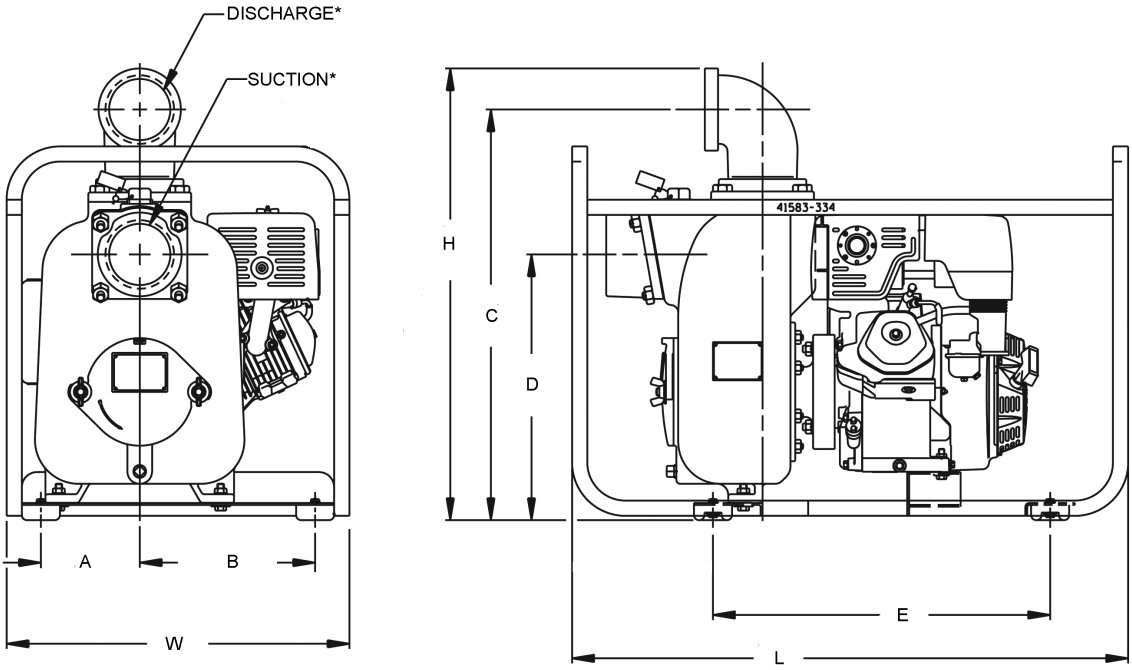

Model	SUC*	DIS*	A	B	C	D	E	L	W	H
12D1-GX160	2	2	6.1 [15.4]	10.8 [27.4]	19.4 [49.2]	10.8 [27.4]	12.0 [30.4]	22.0 [55.8]	18.0 [45.7]	20.9 [53.0]
13D1-GX270	3	3	5.8 [14.7]	9.6 [24.3]	21.5 [54.6]	13.6 [34.5]	13.5 [34.2]	28.0 [71.1]	20.0 [50.8]	23.6 [59.9]
14D1-GX390	4	4	6.5 [16.5]	11.5 [29.2]	26.9 [68.3]	17.4 [44.1]	22.1 [56.1]	36.5 [92.7]	22.5 [57.1]	29.6 [75.1]

(*) Standard NPT (Female) pipe thread.

NOTE: Dimensions are in inches (centimeters) and have a tolerance of ± 1/8".

Standard Features

- Suction Strainer and 90° Discharge Elbow
- Self-primes to 25 ft. with Built-in Flapper Valve
- Replaceable Ductile Iron Impeller and Steel Wearplate
- Maximum Temperature 160° F
- Maximum Operating Pressure to 78 PSI on 2" & 3"" pumps and 100 PSI on 4" pumps
- Viton® / Silicon Carbide Mechanical Seal
- Available with 5 HP to 13 HP Honda Gasoline Engine

Manufacturer of AMT & IPT Pumps

400 Spring Street • Royersford, PA 19468 USA

www.amtpump.com • 888-amt-pump (268-7867)

The Gorman-Rupp Company reserves the right to discontinue any model or change specifications at any time without incurring any obligation.

©2012 American Machine and Tool Company. All rights reserved.

1020