Self-Priming Diaphragm Pumps

Model 337G-96



Model 338E-96

- **Sand Cast Aluminum Construction for Portability and Durability**
- **Thermoplastic Santoprene Diaphragm**
- **2˝ or 3˝ NPT Suction and Discharge Ports**
- **Self-Priming to 25 Ft. Lift**
- **Solids Handling and Dirty Water Design**
- **Maximum Solids Handling up to 1-5/8˝**
- **Modular Component Design Permits Easy Maintenance and Cleanout**
- **Driver Options: Gasoline or Electric Single & Three Phase Motors**
- **Delivers up to 90 GPM**
- **90° Rotatable Base on All Models**

The AMT line of Diaphragm pumps features a 2-stage, heavy duty forged gear driven transmission. Often referred to as Mud or Sludge Pumps, diaphragm pumps are designed to pump mud, slurry, sewage and thick liquids that have the ability to flow. AMT Diaphragm pumps are available with a choice of drivers to meet your application requirements: gasoline, diesel or single or three phase electric motor. Built-in check valve assures self-priming to 20 feet after initial prime. Heavy duty forged gear driven transmission is designed to operate pump at 40 strokes per minute for electric motor models and 60 strokes per minute for engine driven models. Each unit includes a 2" or 3" NPT steel suction strainer, two NPT nipples and a wheel kit for portability. Models 337E-K6, 337H-K6, 338E-K6 and 338G-K6 are kits provided less motor or engine. **Suction and discharge port sizes cannot be reduced.**

Performance of Diaphragm Pumps

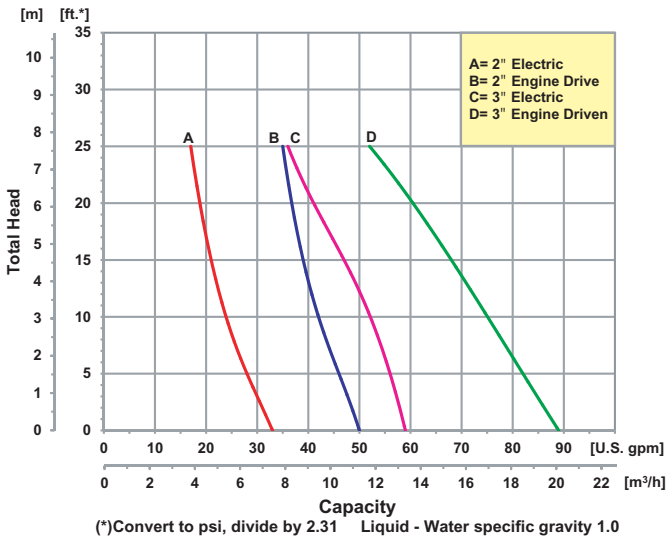

(*)Convert to psi, divide by 2.31 Liquid - Water specific gravity 1.0

AMT
A Gorman-Rupp Company
400 Spring Street • Royersford, PA 19468 USA
www.amtpump.com • 888-amt-pump (268-7867)

For use with nonflammable liquids compatible with pump component materials. Viton® and Teflon® are registered trademarks of E. I. Dupont.

Self-Priming Diaphragm Pumps

2" Self-Priming Diaphragm Pumps

Model	Curve	Driver	Run Time (Hours)	Tank Size (Gal/Ltr.)	Ship Wt. (Lbs.)
338G-96	B	Honda GX120	2.0	0.52/2.0	165
338G-K6	B	Kit, Less Engine	2.0	N/A	135
338L-96	B	LCT 208CC	2.2	0.71/2.7	165
338E-96	A	1.5 HP 1 Phase Electric	N/A	N/A	175
338T-96	A	1.5 HP 3 Phase Electric	N/A	N/A	175
338E-K6	A	Kit, Less Motor	N/A	N/A	135

Model	SUC*	DIS*	L**	W	H**
338G-96	2”	2”	43.4 [110.1]	22.1 [56.1]	23.2 [59.0]
338G-K6	2”	2”	N/A	22.1 [56.1]	23.2 [59.0]
338L-96	2"	2”	44.1 [112.0]	22.1 [56.1]	23.2 [59.0]
338E-96	2”	2”	44.1 [112.0]	22.1 [56.1]	23.2 [59.0]
338T-96	2”	2”	44.1 [112.0]	22.1 [56.1]	23.2 [59.0]
338E-K6	2”	2”	N/A	22.1 [56.1]	23.2 [59.0]

Maximum Solids Handling Capacity: 1-1/4" Diameter

336E/335E-96 Motors: 115/208-230 VAC, 1 Phase, 15.8 Amp, 60 Hz; 110/220 VAC 50 Hz, 17 Amps

3" Self-Priming Diaphragm Pumps

Model	Curve	Driver	Run Time (Hours)	Tank Size (Gal/Ltr.)	Ship Wt. (Lbs.)
337G-96	D	Honda GX120	2.0	0.52/2.0	175
337H-96	D	Honda GX160	2.5	0.82/3.1	185
337H-K6	D	Kit, Less Engine	N/A	N/A	145
337L-96	D	LCT 208CC	2.2	0.71/2.7	185
337E-96	C	1.5 HP 1 Phase Electric	N/A	N/A	185
337T-96	C	1.5 HP 3 Phase Electric	N/A	N/A	185
337E-K6	C	Kit, Less Motor	N/A	N/A	145

Model	SUC*	DIS*	L**	W	H**
337G-96	3”	3”	43.4 [110.1]	26.4 [67.0]	23.4 [59.4]
337H-96	3”	3”	43.9 [111.6]	26.4 [67.0]	24.1 [61.1]
337H-K6	3”	3”	N/A	26.4 [67.0]	23.4 [59.4]
337L-96	3”	3”	44.1 [112.0]	26.4 [67.0]	23.4 [59.4]
337E-96	3”	3”	44.1 [112.0]	26.4 [67.0]	23.4 [59.4]
337T-96	3”	3”	44.1 [112.0]	26.4 [67.0]	23.4 [59.4]
337E-K6	3”	3”	N/A	26.4 [67.0]	23.4 [59.4]

Construction: Sand Cast Aluminum
▲ Oil Alert Included
❖ Includes 20AMP 3-Prong Plug

Maximum Solids Handling Capcity: 1- 5/8” Diameter

(*) Standard NPT (Female) pipe thread.
(**) This dimension may vary due to motor manufacturer's speciifcations.
NOTE: Dimensions are in inches (centimeters) and have a tolerance of ± 1/8”)

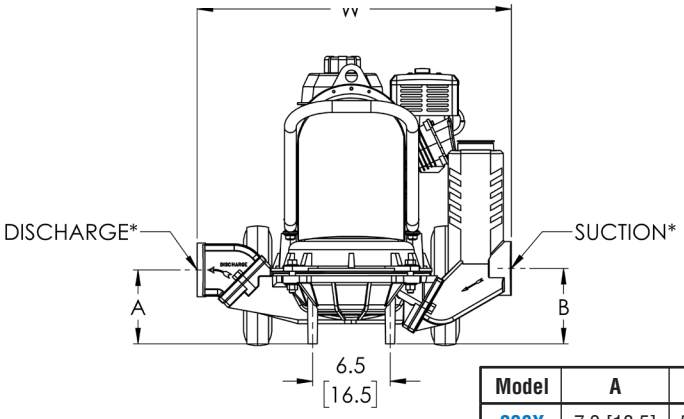

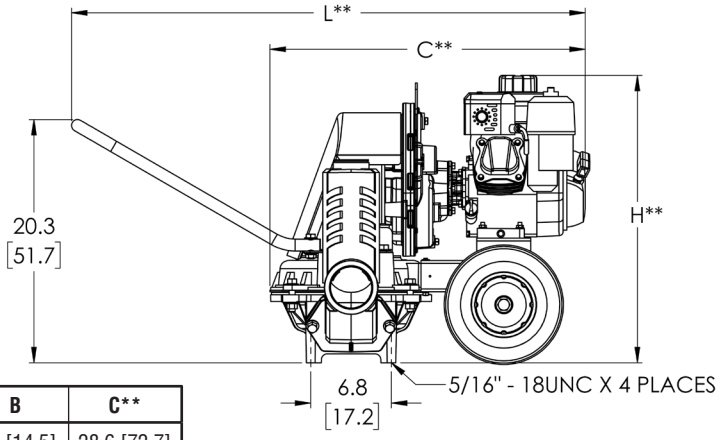

Model	A	B	C**
338X	7.3 [18.5]	5.7 [14.5]	28.6 [72.7]
337X	6.2 [15.7]	6.3 [16.0]	28.6 [72.7]

• Model shown with Gaslone Engine

Standard Features

- Driver Options: Gasoline, Diesel or Electric Single & Three Phase Motors
- 2" to 3" NPT Port Sizes
- Maximum Temperature 180° F
- Models 338E-96/337E-96—1.5 HP Single Phase, 115/230 VAC Volt Motor with Manual Reset Overload
- Models 338E-96/339T-96—1.5 HP Three Phase, 230/460 VAC Volt Motor (Plug & Switch Not Included)
- Models 338G-K6/337H-K6—Kit Furnished Less Engine. For use with Gasoline or Diesel Engines with 0.75" Keyed Shaft (SAE J609a Mounting Flange)
- Models 338E-K6/337E-K6—Kit Furnished Less Motor. For use with Electric Motor (1725 RPM) or Air Motor with a Minimum of 1.5 HP (56C Mounting Flange Required)

Manufacturer of AMT & IPT Pumps
400 Spring Street • Royersford, PA 19468 USA
www.amtpump.com • 888-amt-pump (268-7867)

The Gorman-Rupp Company reserves the right to discontinue any model or change specifications at any time without incurring any obligation.
©2012 American Machine and Tool Company. All rights reserved.

1222