2˝ Self-Priming Engine Driven Dredging Pumps



Model 316F-95
Dredging Pump

- ***High Chromium Stainless Steel Internal Components Resist Wear from Sea Water Mixed with Abrasive Sand***
- ***Silicon Carbide Mechanical Seal Resists Abrasives and Extends Seal Life***
- ***Heavy Duty Cast Iron Casing and Adapter Ensures Durability for Severe Service Conditions***
- ***O-Ring Casing Seal for Ease of Service and Cleaning***
- ***Engine Options: Honda Gasoline & Hatz Diesel Engines***
- ***Solids Handlings and Dirty Water Design***
- ***Maximum Solids Handling 1/2˝***
- ***Self-Primes to 10 Feet in 1 Minute with Maximum Suction Lift of 20 Feet***
- ***Maximum Flow 173 GPM***
- ***Discharge Pressure up to 44 PSI***

AMT Engine Driven Dredging Pump is designed for pumping sea water and fresh water containing solids up to 25% sand, debris and other abrasive particles. This unit can be used for other marine applications including dredging, pile driving, pier maintenance, emergency bilging and wash down. This pump is constructed of wear resistant high chromium stainless steel internal components that are designed to last for over 500 hours of service with regular maintenance of rinsing pump after each use. The high chromium stainless steel components are investment cast and CNC machined for maximum efficiency, performance and quality. Dual volute design reduces radial load on engine. The 4-bolt casing design and removable type volute offers simple maintenance and fast cleanout of the pump.

Performance of Engine Driven Dredging Pumps

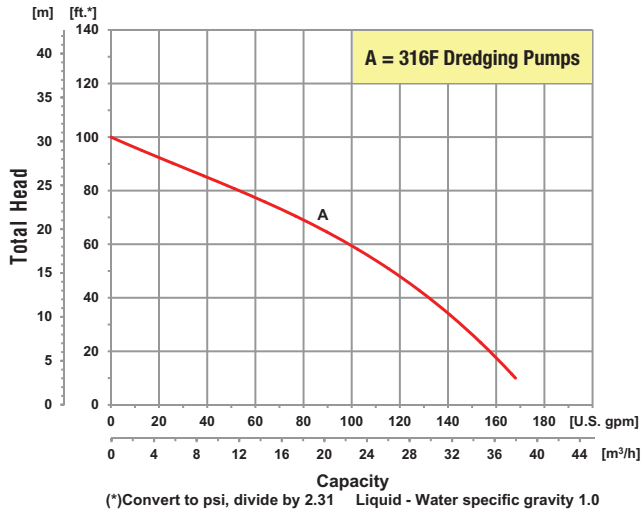

(*)Convert to psi, divide by 2.31 Liquid - Water specific gravity 1.0

AMT
A Gorman-Rupp Company

400 Spring Street • Royersford, PA 19468 USA

www.amtpump.com • 888-amt-pump (268-7867)

For use with nonflammable liquids compatible with pump component materials. Viton® and Teflon® are registered trademarks of E. I. Dupont.

Engine Driven Dredging Pumps

Pump Dimensional & Specification Data

Model	Port	Driver	Seals	Run Time (Hours)	Tank Size (Gal/Ltr.)	Ship Wt. (Lbs.)
316F-95	2" NPT	Honda GX160 OHV▲	Silicon Carbide Mechanical Seals with Buna-N Built In Check Valve & O-rings	2.0	0.82/3.1	85
316F-Z5		Hatz Diesel 1B30		2.7	0.79/3.0	110
316F-99		Pedestal Ball Bearing w/ 3/4" Keyed Shaft		N/A	N/A	50

Construction: Cast Iron with High Chromium Stainless Steel Wear Parts

Maximum Solids Handling Capacity: 1/2" Diameter

▲ Oil Alert Included

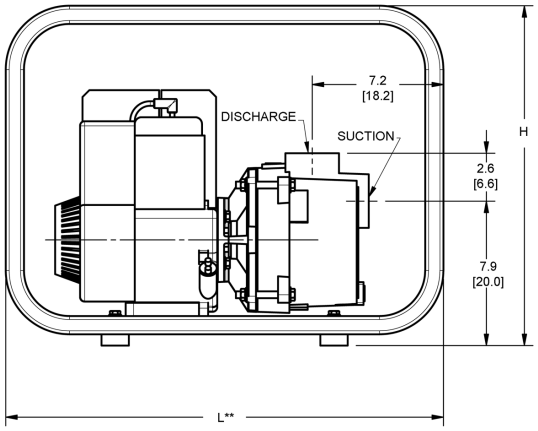

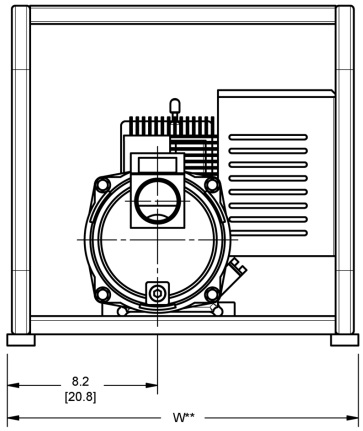

Model	HP Class♦	SUC*	DIS*	L**	W**	H
316F-95	5 HP	2	2	24.0 [60.9]	19.2 [48.7]	18.6 [47.2]
316F-Z5	5 HP	2	2	31.0 [78.7]	22.5 [57.1]	23.6 [59.9]
316F-99✦	N/A	2	2	15.1 [38.3]	8.0 [20.3]	8.9 [22.6]

(♦) HP Class represents market category and is not intended to define actual horsepower.

(✦) Minimum 5 HP Required

(*) Standard NPT (Female) pipe thread.

(**) This dimension may vary due to engine manufacturer's specifications.

NOTE: Dimensions are in inches (centimeters) and have a tolerance of ± 1/8".

Standard Features

- High Chromium Stainless Steel Internal Components Resist Wear from Sea Water Mixed with Abrasive Sand
- Silicon Carbide/Buna-N Mechanical Seal Resists Abrasives and Extends Seal Life
- Heavy Duty Cast Iron Casing and Adapter Ensures Durability for Severe Service Conditions
- O-ring Casing Seal for Ease of Service and Cleaning
- Maximum Working Pressure 75 PSI
- Maximum Temperature 180° F
- Maximum Flow 173 GPM
- Dual Volute Design for Hydraulic Balance
- Maximum Head 101 Ft. @ Sea Water (42 PSI)
- Self-Primes to 10 Ft. in 1 Minute with Maximum Lift of 20 Ft.
- (2) NPT Pipe Nipples, (1) Discharge Elbow and (1) Suction Strainer Included
- Heavy Duty Steel Roll Frame for Portability

The Gorman-Rupp Company reserves the right to discontinue any model or change specifications at any time without incurring any obligation.

©2012 American Machine and Tool Company. All rights reserved.