MILLENNIUM SERIES - F050G1L

Progressive Cavity Pump

CALL TOLL FREE 877-742-2878
FOR SALES AND SUPPORT

Return to BurtProcess.com

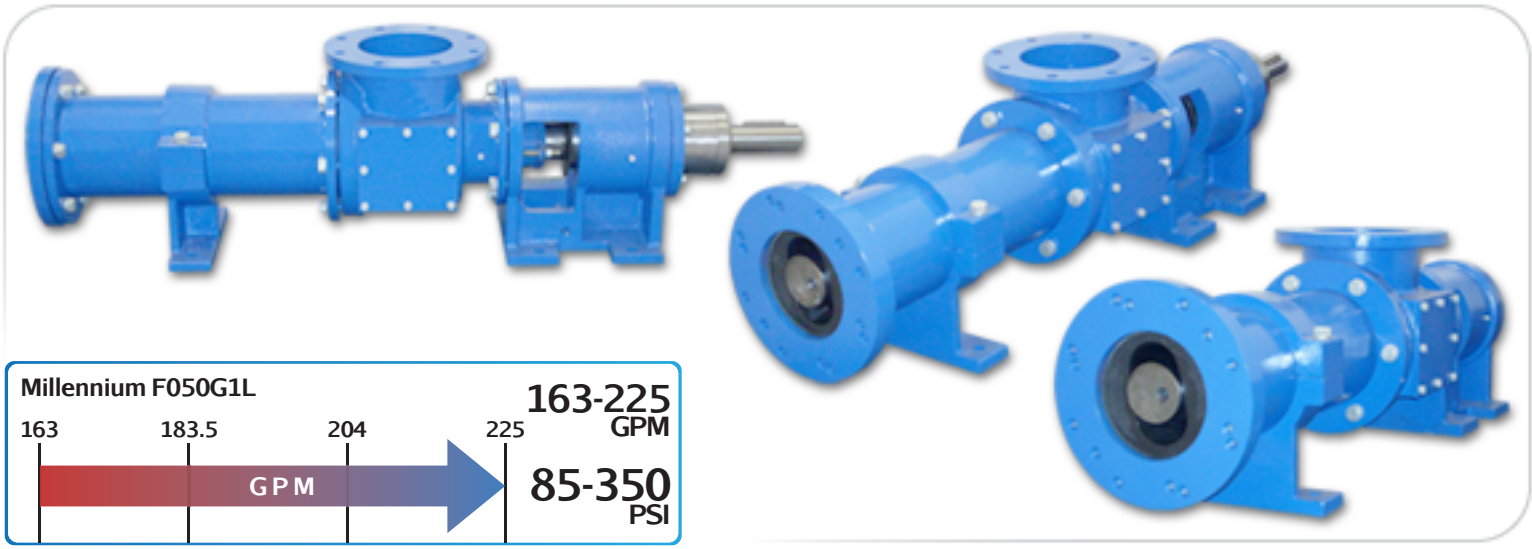

Features

- Low Shear
- Solids Handling up to 50%
- Hardened Joints
- Packing or Mechanical Seal
- 3-Stage Options
- Steel or Stainless Steel

Materials

Rotor: *Chrome-Plated Tool Steel or Stainless Steel*

Stator: *Buna Nitrile, Natural Rubber, Viton™, EPDM*

Motor: *3 - 25 hp*

Inlet: *6"*

Outlet: *6" - ANSI Flange*

Bases: *Steel and Stainless Steel*

Curves

Click Links Below

1-Stage **1F050G1L**

2-Stage **2F050G1L**

Drawings

Click Links Below

1-Stage **1F050G1L**

2-Stage **2F050G1L**

Pump Description

The Liberty Millennium Series F050G1L Heavy Duty Progressive Cavity Pump is ideal for high viscosity liquids and heavy waste solids and other abrasive pumping applications such polymer feed in water treatment facilities. The F050G1L's flow rate of 50 gallons/100 revolutions @ 163 to 225 GPM coupled to its high temperature resistance of up to 350° degrees Fahrenheit makes it an ideal solution for your industrial heavy-duty pumping needs.

The F050G1L is a standard ANSI flanged pump design manufactured with high strength cast Iron or 316 Stainless Steel pump casings and designed in 1, 2 and up to 4 stages for 85, 170, and 350 psi discharge pressures making it an ideal low-cost, maintenance free drop-in replacement pump. Standard suction and discharge flange size for the F050G1L is 6".

The Millennium Series low shear and gentle pumping action enables it to pump delicate fluids and not emulsify the liquid making it an ideal polymer pump or oil/water separation pump. Solids handling capability of up to up to 50% by weight allows even the toughest application to be pumped. The Millennium's modular design comes with a positively sealed, hardened gear joint assembly, hardened tool steel rotors or stainless steel rotors both with hard chrome plating for long-life pumping and a wide selection of stators in Buna Nitrile, Viton, EPDM and Natural Rubber.

All other wetted parts are either carbon steel or 316 stainless steel. The standard seal design is a set of packing with a Lantern Ring and flush connectors. Mechanical seal options are readily available.

Contact a Liberty Process Equipment Representative today for more information about the Millennium F050G1L Series of Progressive Cavity Pumps for Waste Solids.

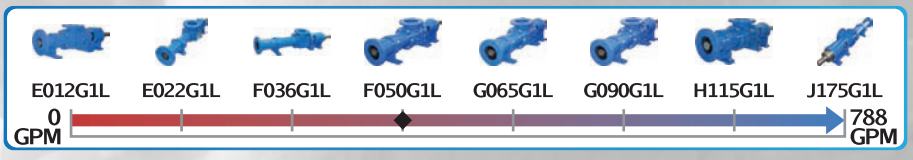

P: 847.640.7867 F: 847.640.7855
2525 Clearbrook Drive Arlington Heights, IL 60005

MILLENNIUM SERIES - 1F050G1L

Progressive Cavity Pump

Performance Curves

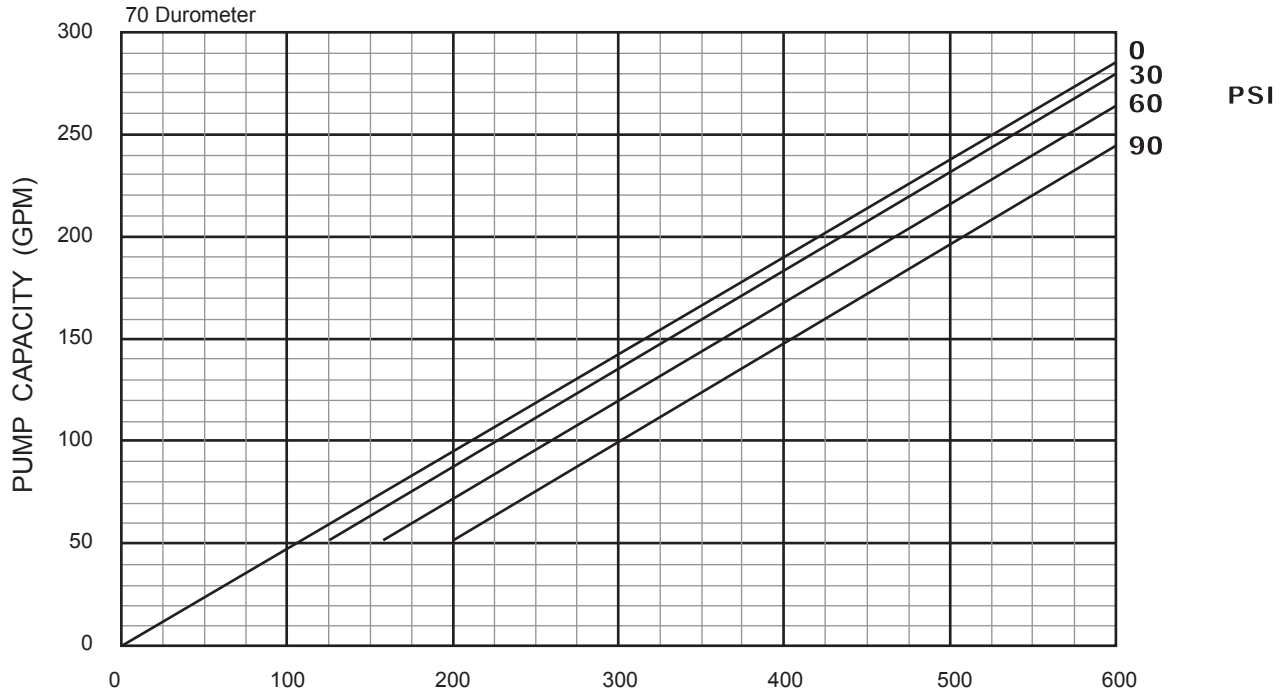

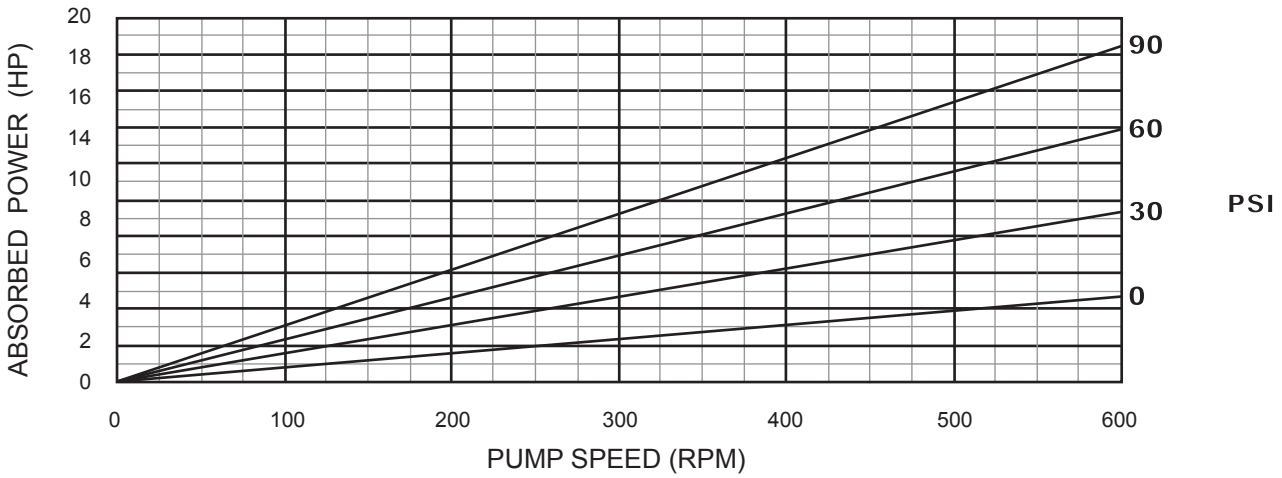

1 Stage Pump

70 Durometer (Performance based on water)

BACK TO TOP

P: 847.640.7867 F: 847.640.7855
2525 Clearbrook Drive Arlington Heights, IL 60005

MILLENNIUM SERIES - 2F050G1L

Progressive Cavity Pump

Performance Curves

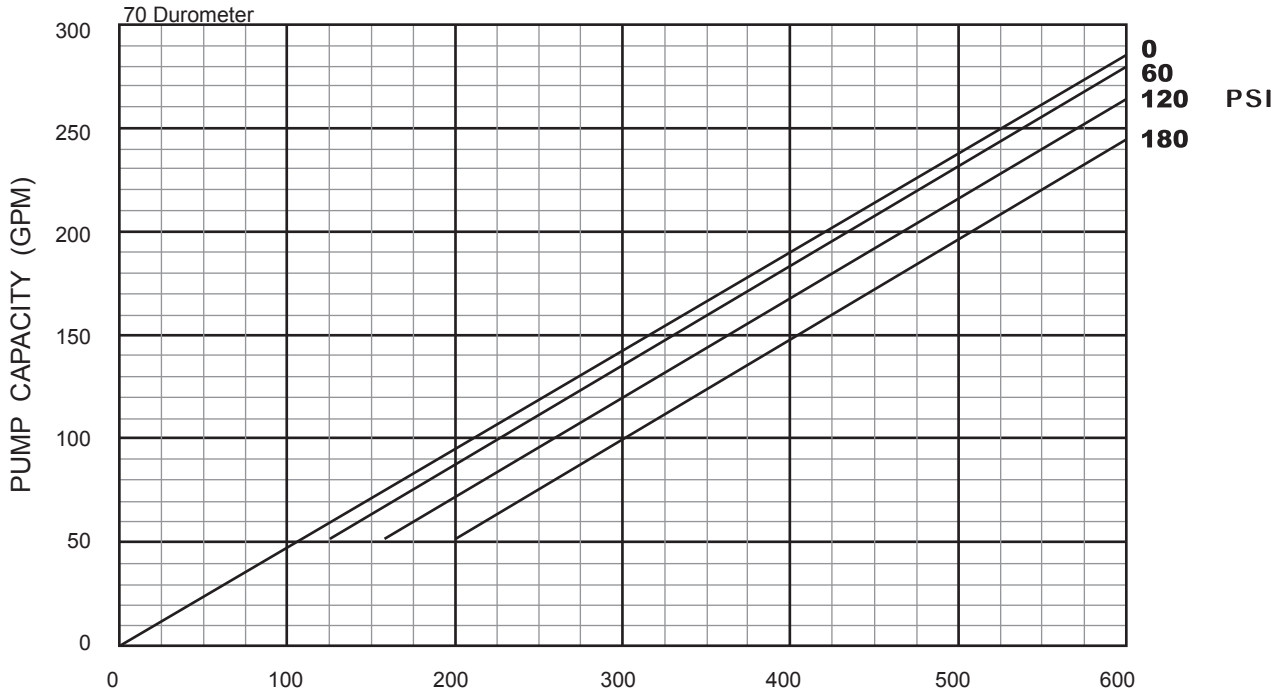

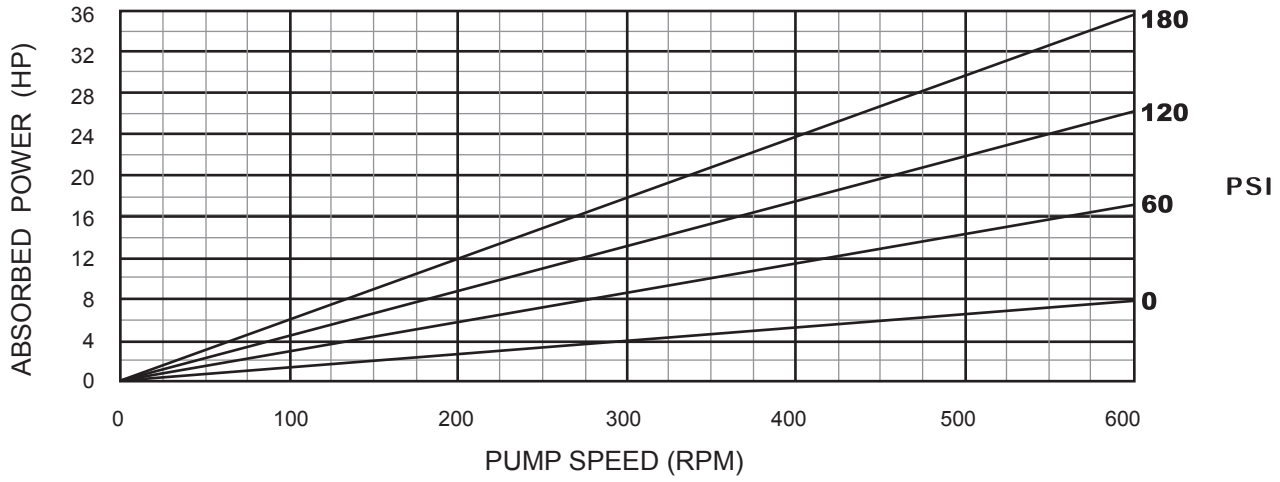

2 Stage Pump

70 Durometer (Performance based on water)

BACK TO TOP

P: 847.640.7867 F: 847.640.7855
2525 Clearbrook Drive Arlington Heights, IL 60005
www.libertyprocess.com

MILLENNIUM SERIES - 1F050G1L

Progressive Cavity Pump

Dimensional Drawings

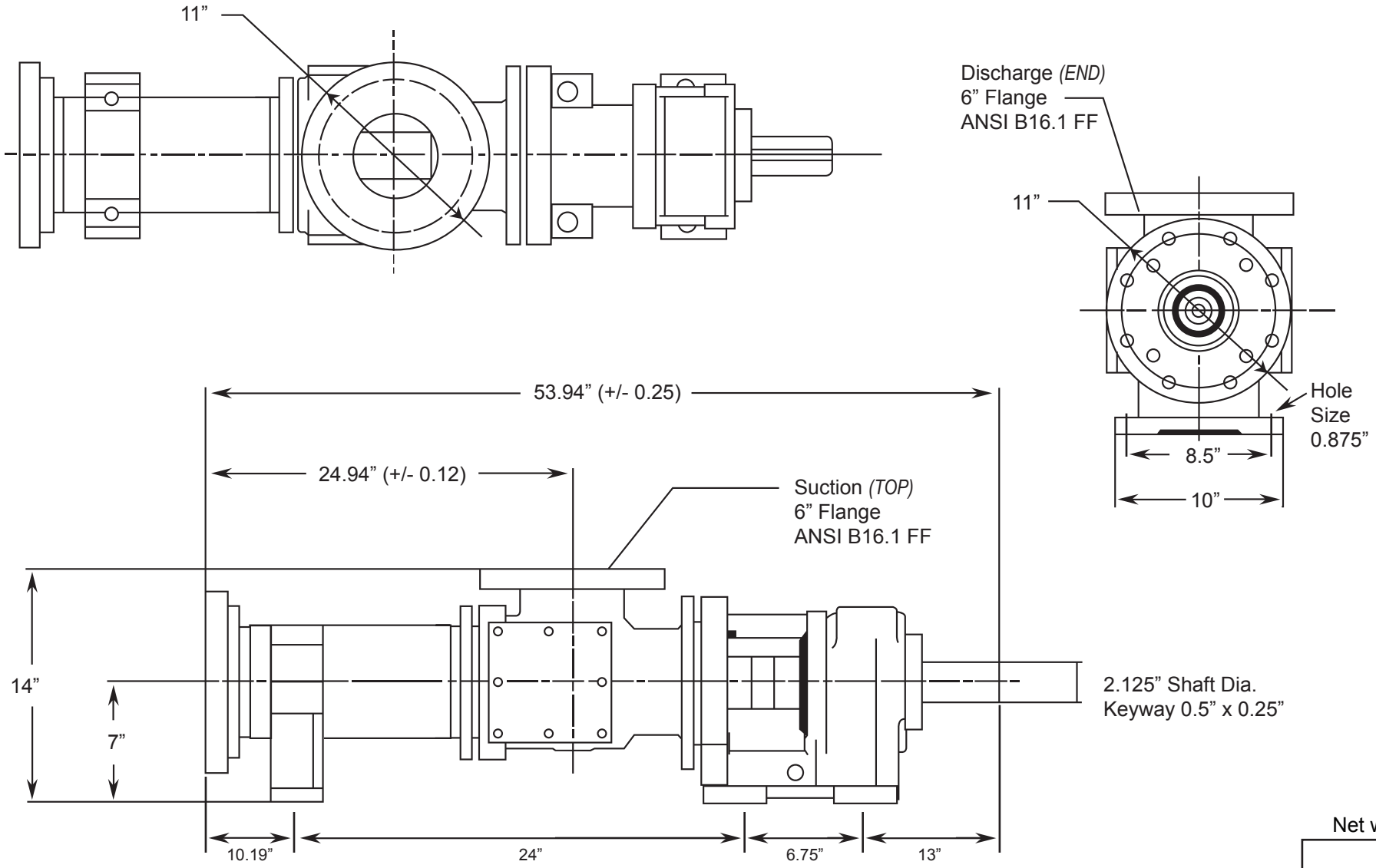

(Pump Rotation is Counter Clockwise) ALL DIMN: Inches

Net weight
≈ lbs.
565

BACK TO TOP

1 Stage Pump

P: 847.640.7867 F: 847.640.7855

2525 Clearbrook Drive Arlington Heights, IL 60005

www.libertyprocess.com

MILLENNIUM SERIES - 2F050G1L

Progressive Cavity Pump

Dimensional Drawings

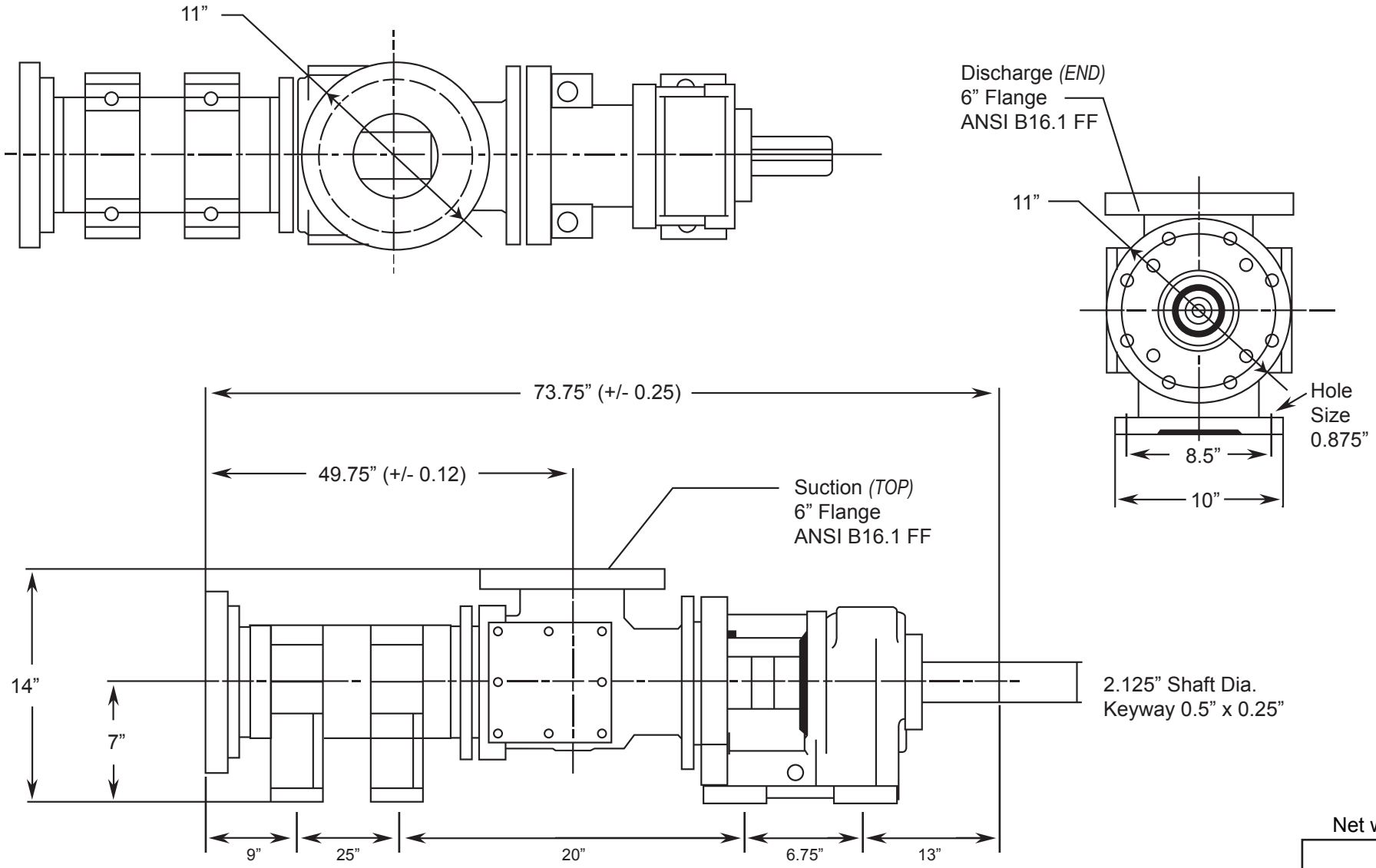

(Pump Rotation is Counter Clockwise) ALL DIMN: Inches

Net weight
≈ lbs.
715

BACK TO TOP

2 Stage Pump

P: 847.640.7867 F: 847.640.7855
2525 Clearbrook Drive Arlington Heights, IL 60005
www.libertyprocess.com