**CALL TOLL FREE 877-742-2878 FOR SALES AND SUPPORT**
**Return to BurtProcess.com**

FLUX

More than just pumps





# Eccentric worm-drive pumps

# FLUX eccentric worm-drive pumps

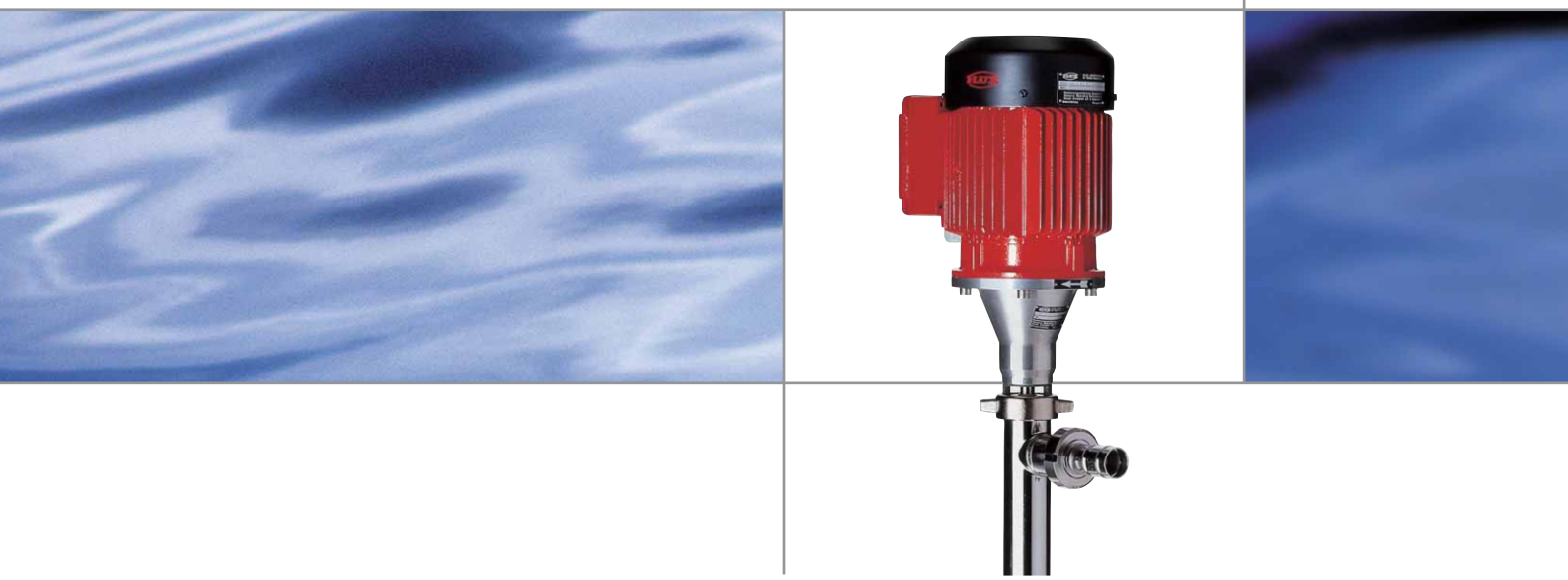

**In this brochure:**

**FLUX high viscosity liquid pumps have been tried and tested in numerous industrial sectors around the world. Three pump designs are available in differing models to meet every requirement for transferring thin to high viscosity media.**

All models are easy to operate and maintain. Naturally, they all carry the advanced design and safety features that users expect from FLUX. For more than 50 years we have manufactured innovative, high-quality products. Operators readily acknowledge the performance of our powerful and extremely reliable pumps.

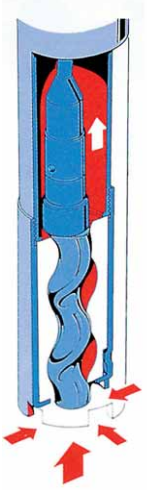

**Positive displacement pump – eccentric worm type:**

- smooth pumping of the liquid with very little turbulences
- easy to clean
- advanced pump design without any inaccessible or hidden voids, ideal for use in the food, cosmetic and pharmaceutical industries
- sanitary version available with 3A-approval
- vertical and horizontal use
- low wear, no valves, vanes etc.
- high output of 30 l/min or 50 l/min

**FLUX eccentric worm-drive pumps type F 550** are designed for a wide range of applications. Two versions are available:

The robust **bearing flange version type F 550 S** is suited to continuous operation and is available with a three-phase electric motor or a compressed-air motor.

The lightweight, easy-to-handle version for quick-change applications **type F 550 GS is equipped with a planetary gear.** These models are used with a FLUX commutator or compressed-air motor, and are ideal for conveying substances with up to 30.000 mPas (cP) viscosity.
The **F 550 GS6** model is designed for lower capacities, covering the viscosity range up to 80.000 mPas (cP).

Under **type code F 560** both pump designs are available in **sanitary version type F 560 S** and **F 560 GS**, especially designed for use in the food, cosmetic and pharmaceutical industries. To meet the highest sanitary standards these pump models are also available with **3A-approval**.

For **use in hazardous areas Zone 0** for transferring high flammability liquids class IIA or IIB, FLUX high viscosity liquid pumps type F 550 and F 560 are available in versions **„XA" and „XB",** tested and certified according to **ATEX-Directive 2014/34/EU.**

# Table of Contents






| | |
|---|---|
| FLUX eccentric worm-drive pumps type F 550 S version with bearing flange | **4 – 5** |
| FLUX eccentric worm-drive pumps type F 560 S version with bearing flange | **6 – 7** |
| FLUX eccentric worm-drive pumps F 550 GS in version with planetary gear | **8 – 9** |
| FLUX eccentric worm-drive pumps type F 560 GS version with planetary gear | **10 – 11** |
| FLUX eccentric worm-drive pumps type F 550 GS6 version with planetary gear | **12 – 13** |
| FLUX eccentric worm-drive pumps in horizontal version | **14 – 15** |
| Drive motors for FLUX eccentric worm-drive pumps | **16 – 17** |
| Viscosity Chart | **18** |
| Dimensions of FLUX eccentric worm-drive pumps | **19 – 22** |
| Drum emptying systems VISCOFLUX | **23** |

# Industrial eccentric worm-drive pumps type F 550 S Version with bearing flange

**Recommended for transferring**
Thin to highly viscous, even pasty, still free flowing substances.

**Typical applications**
Transferring viscous substances from drums and/or containers. Feeding filling machines.

**Available drive motors**
Three-phase electric or compressed-air motors.
Three-phase motors of 0,75 or 1,1 kW, with a speed of 930 or 700 rpm. For highly viscous, pasty substances a motor of 1,1 kW is required with a recommended speed of 700 rpm for viscosities exceeding 50.000 mPas (cP), because of the low velocity of such products. A speed of 930 rpm may be used if the product is still flowing or if a follower plate would support the continuous flow of the product to the pump inlet – please confer to VISCOFLUX system on page 23.

For viscosities up to 25.000 mPas (cP) a motor of 0,75 kW and 930 rpm will be sufficient.

On compressed-air motors of 0,5 to 1,8 kW the speed may be controlled by a valve in the air supply line.

**Scope of supply**
A complete eccentric worm-drive pump consists of: drive motor, pump, stator and hose connection.

The types XA and XB are delivered with stator.




F 550 S-50/21
with three-phase motor

## Technical data

| Type | Viscosity mPas (cP) | Curve No. |
|---|---|---|
| F 550 S-50/21<br>F 550 SXA-50/21<br>F 550 SXB-50/21 | 1<br>1.000–2.000<br>20.000–25.000 | 1<br>2<br>3 |
| F 550 S-54/26 | 1<br>1.000–2.000<br>20.000–25.000 | 4<br>5<br>6 |

**Performance Chart**

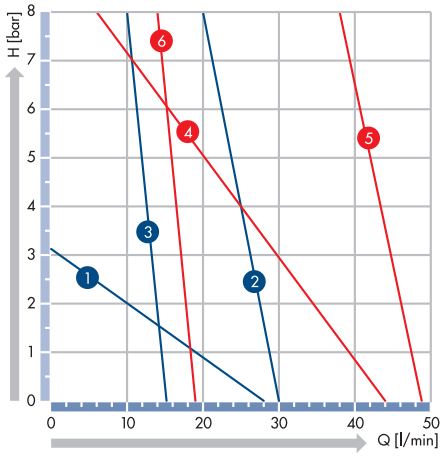


With higher viscosities delivery rate will be lower, depending on the velocity of the fluid.

Values ± 10% at 930 rpm. Delivery rate depends on the velocity of the fluid.

1 Ex-proof versions available

## Eccentric worm-drive pumps with mechanical seal, in bearing flange version, drive motors see page 16

| **Type** | **F 550 S-50/21** | **F 550 S-54/26** | **F 550 SXA-50/21** | **F 550 SXB-50/21** |
|---|---|---|---|---|
| Delivery rate max. | 30 l/min | 50 l/min | 30 l/min | |
| Delivery head max. | 8 bar | | | |
| Thread on outlet | G 1½ A (BSP 1½" male) | | | |
| Seal type | mechanical seal in ceramic oxide, o-rings in FKM | | | |
| Material | bearing flange in aluminium*; outer tube, torsion shaft and eccentric worm in stainless steel 316 Ti | | | |
| Outer-Ø | 50 mm | 54 mm | 50 mm | 50 mm |
| Stator | not included with the pump, separate part number please see list below | | Stator PTFE white, included with the pump | |
| Explosion-proof according to ATEX-Directive 2014/34/EU for use in Zone 0 | not approved for transferring high flammability liquids in Zone 0 | | EC Type Examination Certificate No. PTB 99 ATEX 4050 X (Ex II 1/2 G IIA T4) | EC Type Examination Certificate No. PTB 99 ATEX 4051 X (Ex II 1/2 G IIB T4) |
| **Part No.**/Weight | | | | |
| Immersion length 700 mm | **10-550 25 507**/4,9 kg | **10-550 25 649**/5,4 kg | **10-550 23 020**/5,5 kg | **10-550 23 400**/5,5 kg |
| Immersion length 1.000 mm | **10-550 25 510**/5,6 kg | **10-550 25 652**/6,1 kg | **10-550 23 021**/6,1 kg | **10-550 23 401**/6,1 kg |
| Immersion length 1.200 mm | **10-550 25 512**/6,1 kg | **10-550 25 654**/6,6 kg | **10-550 23 022**/6,6 kg | **10-550 23 402**/6,6 kg |

Other lengths on request.

**Also available:**

- Version with cardan shaft for higher torque
- Pumps with right/left rotation
- Pumps for VISCOFLUX and VISCOFLUX mobile

## Stators for eccentric worm-drive pumps type F 550 S

| **Material** | **Temperature** | **Recommended for** | **Part No.**/Weight **outer-Ø 50 mm** | **Part No.**/Weight **outer-Ø 54 mm** |
|---|---|---|---|---|
| NBR white (Nitrile Butadiene Rubber) elastomer | max. 90 °C | particularly suitable for oils and greases, also for food products | **10-550 24 248**/0,5 kg | **10-550 25 621**/0,6 kg |
| NBR black (Nitrile Butadiene Rubber) elastomer | max. 90 °C | particularly suitable for oils and greases, not suitable for food products | **10-550 24 244**/0,5 kg | **10-550 25 620**/0,6 kg |
| FKM (Fluor Rubber) elastomer | max. 120 °C | excellent chemical resistance to all different kind of products, not suitable for food products | **10-550 24 247**/0,5 kg | **10-550 25 619**/0,6 kg |
| PTFE (Ethylene-Tetra-Fluor-Ethylene) solid material | max. 120 °C | excellent chemical resistance, particularly suitable for food products, pharmaceuticals and cosmetics | **10-550 24 256**/0,6 kg | **10-550 25 625**/0,7 kg |

## Hose connection in stainless steel, complete with union nut G 1½

| **Type F 550 S** | **Part No.**/Weight |
|---|---|
| for flexible hose, inside **DN 25** | **10-959 04 002**/0,2 kg |
| for flexible hose, inside **DN 32** | **10-959 04 003**/0,3 kg |
| for flexible hose, inside **DN 38** | **10-959 04 004**/0,4 kg |

# Sanitary pumps type F 560 S
# Version with bearing flange

**Recommended for transferring**
Thin to highly viscous, even pasty, still free flowing substances.

**Typical applications**
A pump designed to meet the specific requirements of the food, cosmetic and pharmaceutical industries.

The sanitary pump type F 560 S can be stripped down in no time for cleaning and/or sterilisation. The stator housing comprises a safety bar to protect containers and to allow transfer operations from plastic inliners.

**3A-Certificate for USA**
The F 560 S pump is available in special version with 3A-approval: ground and polished, equipped with a closed mechanical seal in stainless steel with sliding faces in silicium carbide (SiC).

**FLUX FOOD for EU**
The eccentric worm-drive pump F560 S is also available in FLUX FOOD version conform to the EU regulations (EG) 1935/2004 and (EU) 10/2011 – recognizable at the glass fork symbole.
(More information, see FLUX FOOD brochure)

**Available drive motors**
Three-phase electric motors or compressed-air motors

**Scope of supply**
A complete eccentric worm-drive pump consists of: drive motor, pump, stator and hose connection.

The type XA is delivered with stator.



F 560 S3A-50/21
with three-phase motor

## Technical data

| Type | Viscosity mPas (cP) | Curve No. |
|---|---|---|
| F 560 S1-50/21<br>F 560 S2-50/21<br>F 560 S3A-50/21 | 1<br>1.000–2.000<br>20.000–25.000 | 1<br>2<br>3 |
| F 560 S1-54/26<br>F 560 S2-54/26<br>F 560 S3A-54/26 | 1<br>1.000–2.000<br>20.000–25.000 | 4<br>5<br>6 |

Performance Chart

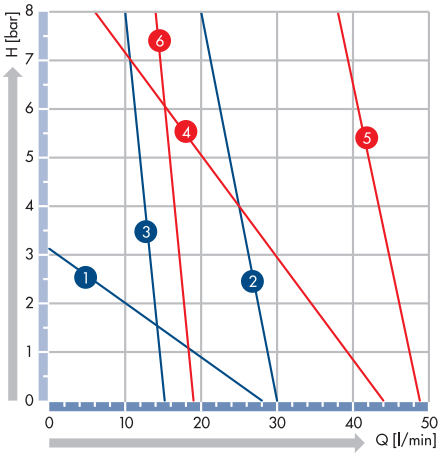


With higher viscosities delivery rate will be lower, depending on the velocity of the fluid.

Values ± 10 % at 930 rpm. Delivery rate depends on the velocity of the fluid.

1 3A certificated version available

2 products conform to EG 1935/2004 and EU 10/2011 available

3 Ex-proof versions available

## Eccentric worm-drive pump with mechanical seal in bearing flange version, drive motors see page 16

| **Type** | **F 560 S1-50/21** | **F 560 S2-50/21** | **F 560 S1XA-50/21** | **F 560 S2XA-50/21** |
|---|---|---|---|---|
| Delivery rate max. | 30 l/min | | | |
| Delivery head max. | 8 bar | | | |
| Thread on outlet | Rd 58 x 1/6 | G 1½ A | Rd 58 x 1/6 | G 1½ A (BSP 1½" male) |
| Seal type | mechanical seal in SiC, o-rings in FKM (foodgrade) | | | |
| Material | bearing flange, outer tube, torsion shaft and eccentric worm in stainless steel 316 Ti | | | |
| Outer-Ø | 50 mm | | | |
| Stator | not included with the pump, separate part number please see list below | | Stator PTFE white, included with the pump | |
| Explosion-proof according to ATEX-Directive 2014/34/EU for use in Zone 0 | not approved for transferring highly flammable liquids in Zone 0 | | EC Type Examination Certificate No. PTB 99 ATEX 4052 X (Ex II 1/2 IIA T4) | |
| **Part No.**/Weight | | | | |
| Immersion length 700 mm | **10-560 24 407**/4,3 kg | **10-560 24 507**/4,3 kg | – | – |
| Immersion length 1.000 mm | **10-560 24 410**/5,7 kg | **10-560 24 510**/5,7 kg | **10-560 20 810**/7,1 kg | **10-560 20 910**/5,5 kg |
| Immersion length 1.200 mm | **10-560 24 412**/6,2 kg | **10-560 24 512**/7,0 kg | **10-560 20 812**/7,6 kg | **10-560 20 912**/6,0 kg |

| **Type** | **F 560 S1-54/26** | **F 560 S2-54/26** |
|---|---|---|
| Delivery rate max. | 50 l/min | |
| Delivery head max. | 8 bar | |
| Thread on outlet | Rd 58 x 1/6 | G 1½ A |
| Seal type | mechanical seal in SiC, o-rings in FKM (foodgrade) | |
| Material | bearing flange, outer tube, torsion shaft and eccentric worm in stainless steel 316 Ti | |
| Outer-Ø | 54 mm | |
| Stator | not included with the pump, separate part number please see list below | |
| **Part No.**/Weight | | |
| Immersion length 700 mm | **10-560 25 507**/4,3 kg | **10-560 25 607**/4,3 kg |
| Immersion length 1.000 mm | **10-560 25 510**/5,7 kg | **10-560 25 610**/5,7 kg |
| Immersion length 1.200 mm | **10-560 25 512**/6,2 kg | **10-560 25 612**/7,5 kg |

**Also available:**

- FLUX FOOD pumps conform EG 1935/2004 und EU 10/2011
- Version with cardan shaft for higher torque
- Pumps with right/left rotation
- Pumps for VISCOFLUX and VISCOFLUX mobile

## Eccentric worm-drive pumps type F 560 S3A in 3A version

| **Type** | **F 560 S3A-50/21** | **F 560 S3A-54/26** |
|---|---|---|
| Delivery rate max. | 30 l/min | 50 l/min |
| Delivery head max. | 8 bar | 8 bar |
| Thread on outlet | Clamp 2" | Clamp 2" |
| Seal type | closed mechanical seal in stainless steel, sliding faces in SiC, O-rings in FKM (foodgrade) | |
| Material | bearing flange, outer tube, torsion shaft and eccentric worm in stainless steel 316 Ti, ground and polished | |
| Outer-Ø | 50 mm | 54 mm |
| Stator | stator in PTFE included with the pump | |
| **Part No.**/Weight | | |
| Immersion length 700 mm | **10-560 24 007**/5,8 kg | **10-560 25 007**/6,3 kg |
| Immersion length 1.000 mm | **10-560 24 010**/6,5 kg | **10-560 25 010**/7,0 kg |
| Immersion length 1.200 mm | **10-560 24 012**/7,0 kg | **10-560 25 012**/7,5 kg |

## Stator in PTFE, Stator Housing in Stainless Steel with Safety Bar and inliner

| **Type F 560 S1, S2** | **Part No.**/Weight |
|---|---|
| Outer-Ø 50 mm | **10-560 21 900**/0,6 kg |
| Outer-Ø 54 mm | **10-560 23 900**/0,7 kg |

## Hose connection in stainless steel, complete with union nut or clamp connection

| **Part No.**/Weight | **Type F 560 S1** | **Type F 560 S2** | **Type F 560 S3A** |
|---|---|---|---|
| For flexible hose, inside Ø **DN 25** | **10-959 04 115**/0,2 kg | **10-959 04 002**/0,2 kg | – |
| For flexible hose, inside Ø **DN 32** | **10-959 04 134**/0,3 kg | **10-959 04 003**/0,3 kg | **10-959 04 137**/0,4 kg |
| For flexible hose, inside Ø **DN 38** | **10-959 04 130**/0,4 kg | **10-959 04 004**/0,4 kg | **10-959 04 109**/0,4 kg |

# Industrial eccentric worm-drive pumps type F 550 GS with planetary gear

**Recommended for transferring**
Thin to medium viscosity liquids up to a maximum viscosity of 30.000 mPas (cP).

**Typical applications**
Liquid transfer from barrels and/or containers.
The eccentric worm-drive pumps type F 550 GS are particularly lightweight and easy-to-handle, making them extremely versatile pumps.
The lightest model has a weight of 5,5 kg only.
The weight of the complete pump depends on the immersion length and motor assembly.

**Available drive motors**
Commutator motors or compressed air motors.

An infinitely variable speed variator – also available on explosion-proof models – allows the operator to set pump capacity to specific delivery requirements.

**Scope of supply**
A complete eccentric worm-drive pump consists of: drive motor, pump, stator and hose connection.

The types XA and XB are delivered with stator.



F 550 GS-54/26
with commutator motor F 460 Ex

## Technical data

| Type | Viscosity mPas (cP) | Curve No. |
|---|---|---|
| FEM 4070<br>F 458/F 458 EL<br>F 460 Ex<br>F 460 Ex EL | 1<br>up to 3.000<br>up to 12.000 | 1<br>2<br>3 |
| F 458-1<br>F 460-1 Ex | 1<br>up to 3.000<br>up to 25.000 | 4<br>5<br>6 |
| F 416 Ex<br>F 416-1 Ex<br>F 416-2 Ex<br>F 457/F 457 EL | 1<br>up to 3.000<br>up to 30.000 | 7<br>8<br>9 |

**Performance Chart F 550 GS-50/21**

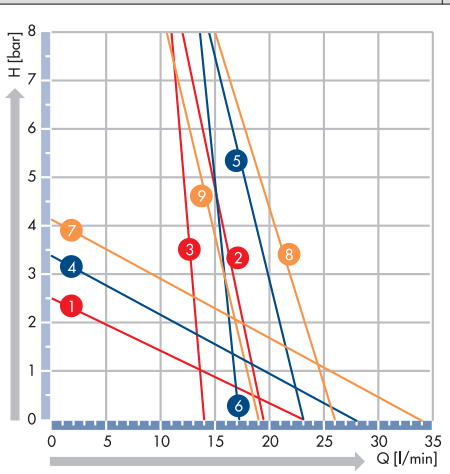


**Performance Chart F 550 GS-54/26**

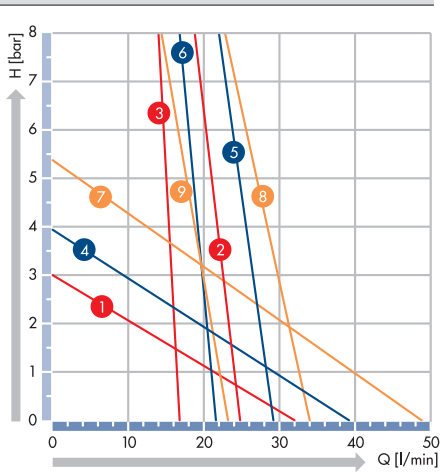


Values ± 10 %. Delivery rate depends on the velocity of the fluid.

[1] Ex-proof versions available

## Eccentric worm-drive pumps with mechanical seal in planetary gear version, drive motors see page 17

| Type | F 550 GS-50/21 | F 550 GS-54/26 | F 550 GSXA-50/21 | F 550 GSXB-50/21 |
|---|---|---|---|---|
| Delivery rate max. | 30 l/min | 50 l/min | 30 l/min | |
| Delivery head max. | 8 bar | | | |
| Thread on outlet | G 1½ A | | | |
| Seal type | mechanical seal in ceramic oxide, o-rings in FKM | | | |
| Material | outer tube, torsion shaft and eccentric worm in stainless steel 316 Ti | | | |
| Outer-Ø | 50 mm | 54 mm | 50 mm | |
| Stator | not included with the pump, separate part number please see list below | | Stator PTFE white, included with the pump | Stator PTFE black, included with the pump |
| Explosion-proof according to ATEX-Directive 2014/34/EU for use in Zone 0 | not approved for transferring highly flammable liquids in Zone 0 | | EC Type Examination Certificate No. PTB 99 ATEX 4050 X (Ex II 1/2 G IIA T4) | EC Type Examination PTB 99 ATEX 4051 X (Ex II 1/2 G IIB T4) |
| **Part No.**/Weight | | | | |
| Immersion length 700 mm | **10-550 24 807**/4,3 kg | **10-550 25 675**/4,8 kg | **10-550 23 030**/4,8 kg | **10-550 23 410**/4,8 kg |
| Immersion length 1.000 mm | **10-550 24 810**/5,0 kg | **10-550 25 676**/5,5 kg | **10-550 23 031**/5,5 kg | **10-550 23 411**/5,5 kg |
| Immersion length 1.200 mm | **10-550 24 812**/5,5 kg | **10-550 25 677**/6,0 kg | **10-550 23 032**/6,0 kg | **10-550 23 412**/6,0 kg |

Other lengths on request.

**Also available:**

- Version with cardan shaft for higher torque

## Stators for eccentric worm-drive pumps type F 550 GS

| Material | Temperature | Recommended for | Part No./Weight outer-Ø 50 mm | Part No./Weight outer-Ø 54 mm |
|---|---|---|---|---|
| NBR white (Nitrile Butadiene Rubber) elastomer | max. 90 °C | particularly suitable for oils and greases, also for food products | **10-550 24 248**/0,5 kg | **10-550 25 621**/0,6 kg |
| NBR black (Nitrile Butadiene Rubber) elastomer | max. 90 °C | particularly suitable for oils and greases, not suitable for food products | **10-550 24 244**/0,5 kg | **10-550 25 620**/0,6 kg |
| FKM (Fluor Rubber) elastomer | max. 120 °C | excellent chemical resistance to all different kind of products, not suitable for food products | **10-550 24 247**/0,5 kg | **10-550 25 619**/0,6 kg |
| PTFE (Ethylene-Tetra-Fluor-Ethylene) solid material | max. 120 °C | excellent chemical resistance, particularly suitable for food products, pharmaceuticals and cosmetics | **10-550 24 256**/0,6 kg | **10-550 25 625**/0,7 kg |

## Hose connection in stainless steel, complete with union nut G 1½

| Type F 550 GS | Part No./Weight |
|---|---|
| For flexible hose, inside Ø **DN 25** | **10-959 04 002**/0,2 kg |
| For flexible hose, inside Ø **DN 32** | **10-959 04 003**/0,3 kg |
| For flexible hose, inside Ø **DN 38** | **10-959 04 004**/0,4 kg |

# Sanitary pumps type F 560 GS with planetary gear

**Recommended for transferring**
Thin to medium viscosity liquids up to maximum 30.000 mPas (cP).

**Typical applications**
Very lightweight and easy-to-handle pump for use in the food, cosmetic and pharmaceutical industries. The sanitary pump type F 560 GS can be stripped down in no time for cleaning and/or sterilisation. The stator housing comprises a safety bar to protect containers and to allow transfer out of plastic inliners.

The sanitary pump type F 560 GS is available in special version with 3A-approval: ground, polished, with a closed mechanical seal in stainless steel with sliding faces in silicium carbide (SiC).

**Available drive motors**
Commutator motors or compressed-air motors.

An infinite variable speed variator – also on explosion-proof motors – allows the operator to set pump capacity to specific delivery requirements.

**Scope of supply**
A complete sanitary pump consists of:
drive motor, pump, stator and hose connection.

The type XA is delivered with stator.

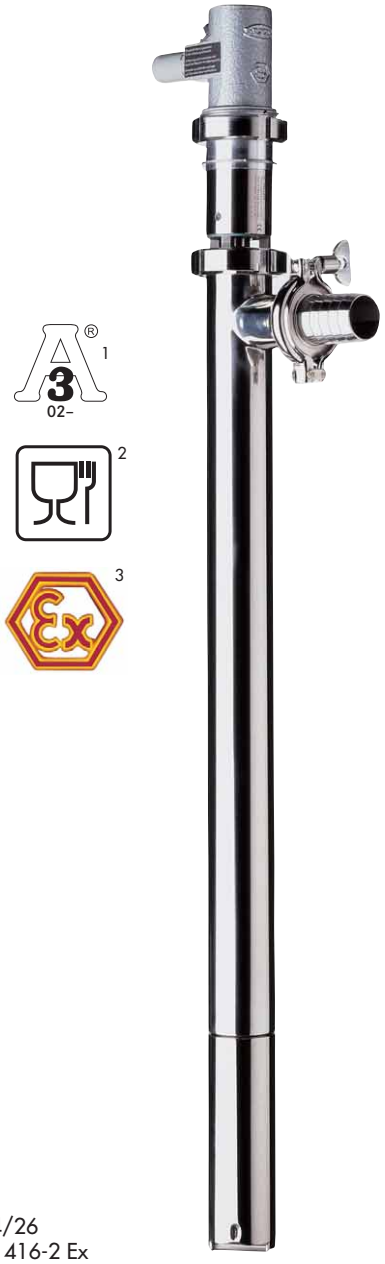

F 560 GS3A-54/26
with air motor F 416-2 Ex

## Technical data

| Type | Viscosity mPas (cP) | Curve No. |
|---|---|---|
| FEM 4070<br>F 458/F 458 EL<br>F 460 Ex<br>F 460 Ex EL | 1<br>up to 3.000<br>up to 12.000 | 1<br>2<br>3 |
| F 458-1<br>F 460-1 Ex | 1<br>up to 3.000<br>up to 25.000 | 4<br>5<br>6 |
| F 416 Ex<br>F 416-1 Ex<br>F 416-2 Ex<br>F 457/F 457 EL | 1<br>up to 3.000<br>up to 30.000 | 7<br>8<br>9 |

**Performance Chart F 560 GS-50/21**

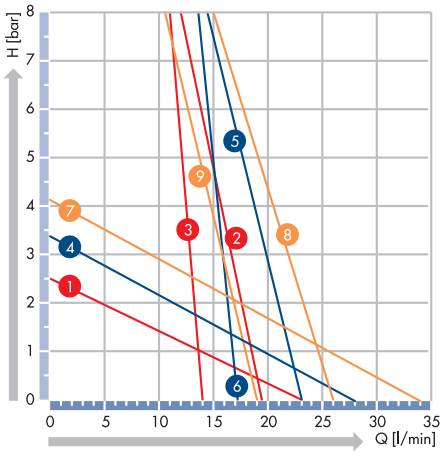


**Performance Chart F 560 GS-54/26**

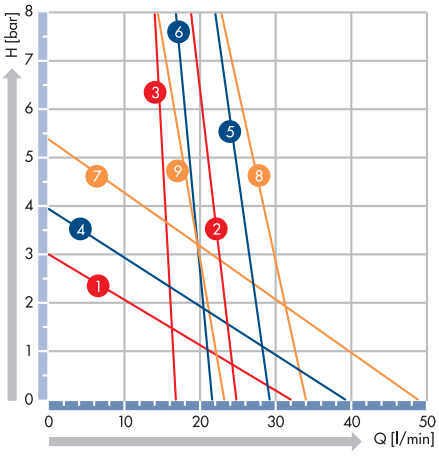


Values ± 10 %. Delivery rate depends on the velocity of the fluid.

1 3A certificated version available

2 products conform to EG 1935/2004 and EU 10/2011 available

3 Ex-proof versions available

## Eccentric worm-drive pumps in planetary gear version with mechanical seal, drive motors see page 17

| Type | F 560 GS1-50/21 | F 560 GS2-50/21 | F 560 GS1XA-50/21 | F 560 GS2XA-50/21 |
|---|---|---|---|---|
| Delivery rate max. | 30 l/min | | | |
| Delivery head max. | 8 bar | | | |
| Thread on outlet | Rd 58 x 1/6 | G 1½ A | Rd 58 x 1/6 | G 1½ A (BSP 1½" male) |
| Seal type | mechanical seal in SiC, o-rings in FKM (foodgrade) | | | |
| Material | outer tube, torsion shaft and eccentric worm in stainless steel 316 Ti | | | |
| Outer-Ø | 50 mm | | | |
| Stator | not included with the pump, separate part number please see list below | | Stator PTFE white, included with the pump | |
| Explosion-proof according to ATEX-Directive 2014/34/EU for use in Zone 0 | not approved for transferring highly flammable liquids in Zone 0 | | EC Type Examination Certificate No. PTB 99 ATEX 4052 X (Ex II 1/2 G IIA T4) | |
| **Part No.**/Weight | | | | |
| Immersion length 700 mm | **10-560 24 607**/4,3 kg | **10-560 24 707**/4,3 kg | – | – |
| Immersion length 1.000 mm | **10-560 24 610**/5,7 kg | **10-560 24 710**/5,7 kg | **10-560 21 010**/5,9 kg | **10-560 21 110**/5,9 kg |
| Immersion length 1.200 mm | **10-560 24 612**/6,2 kg | **10-560 24 712**/6,2 kg | **10-560 21 012**/6,2 kg | **10-560 21 112**/6,2 kg |

| Type | F 560 GS1-54/26 | F 560 GS2-54/26 |
|---|---|---|
| Delivery rate max. | 50 l/min | |
| Delivery head max. | 8 bar | |
| Thread on outlet | Rd 58 x 1/6 | G 1½ A (BSP 1½" male) |
| Seal type | mechanical seal in SiC, o-rings in FKM (foodgrade) | |
| Material | outer tube, torsion shaft and eccentric worm in stainless steel 316 Ti | |
| Outer-Ø | 54 mm | |
| Stator | not included with the pump, separate part number please see list below | |
| **Part No.**/Weight | | |
| Immersion length 700 mm | **10-560 25 707**/4,3 kg | **10-560 25 807**/4,3 kg |
| Immersion length 1.000 mm | **10-560 25 710**/5,7 kg | **10-560 25 810**/5,7 kg |
| Immersion length 1.200 mm | **10-560 25 712**/6,2 kg | **10-560 25 812**/6,2 kg |

**Also available:**

- FLUX FOOD pumps conform EG 1935/2004 und EU 10/2011
- Version with cardan shaft for higher torque

## Eccentric worm-drive pumps type F 560 GS3A in 3A Version, drive motors see page 17

| Type | F 560 GS3A-50/21 | F 560 GS3A-54/26 |
|---|---|---|
| Delivery rate max. | 30 l/min | 50 l/min |
| Delivery head max. | 8 bar | 8 bar |
| Thread on outlet | Clamp 2" | Clamp 2" |
| Seal type | closed mechanical seal in stainless steel, sliding faces in SiC, o-rings in FKM (foodgrade) | |
| Material | outer tube, torsion shaft and eccentric worm in stainless steel 316 Ti: ground and polished | |
| Outer-Ø | 50 mm | 54 mm |
| Stator | stator in PTFE included with the pump | |
| **Part No.**/Weight | | |
| Immersion length 700 mm | **10-560 24 107**/5,4 kg | **10-560 25 107**/5,8 kg |
| Immersion length 1.000 mm | **10-560 24 110**/5,7 kg | **10-560 25 110**/6,2 kg |
| Immersion length 1.200 mm | **10-560 24 112**/6,2 kg | **10-560 25 112**/6,7 kg |

## Stator in PTFE, stator housing in stainless steel with safety bar and Inliner

| Type F 560 GS1, GS2 | Part No./Weight |
|---|---|
| Outer-Ø 50 mm | **10-560 21 900**/0,6 kg |
| Outer-Ø 54 mm | **10-560 23 900**/0,7 kg |

## Hose connection in stainless steel, complete with union nut or clamp connection

| Part No./Weight | Type F 560 GS1 | Type F 560 GS2 | Type F 560 GS3A |
|---|---|---|---|
| For flexible hose, inside Ø **DN 25** | **10-959 04 115**/0,2 kg | **10-959 04 002**/0,2 kg | – |
| For flexible hose, inside Ø **DN 32** | **10-959 04 134**/0,3 kg | **10-959 04 003**/0,3 kg | **10-959 04 137**/0,4 kg |
| For flexible hose, inside Ø **DN 38** | **10-959 04 130**/0,4 kg | **10-959 04 004**/0,4 kg | **10-959 04 109**/0,4 kg |

# Eccentric worm-drive pumps type F 550 GS with planetary gear, ratio 1 : 6.75

**Recommended for transferring**
Thin to high viscosity substances up to a maximum viscosity of 80.000 mPas (cP).

**Typical applications**
Very lightweight and easy-to-handle pump designed for lower capacities. Extremely smooth transfer operations with a speed of 210 or 420 rpm only.

**Available drive motors**
Single-phase AC motors with capacitor switch or three-phase motors.

**Scope of supply**
A complete eccentric worm-drive pump consists of: drive motor, pump, stator and hose connection.



F 550 GS6-50/21
with three-phase motor F 403/4

## Technical data

| Type | Speed | Curve No. |
|---|---|---|
| F 550 GS6-50/21 | Motor 1.450 rpm<br>Pump 210 rpm | 1 |
| | Motor 2.850 rpm<br>Pump 420 rpm | 2 |
| F 550 GS6-54/26 | Motor 1.450 rpm<br>Pump 210 rpm | 3 |
| | Motor 2.850 rpm<br>Pump 420 rpm | 4 |

**Performance Chart**

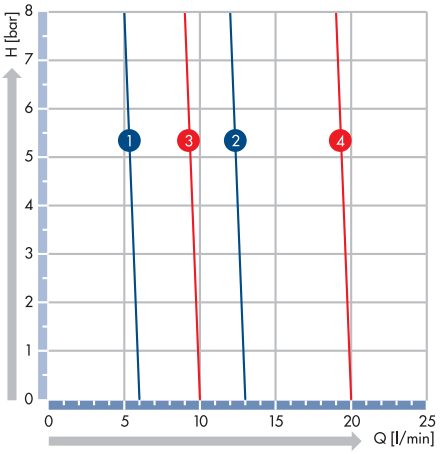


Values ± 10 %. Delivery rate depends on the velocity of the fluid.

[1] Ex-proof versions available

## Eccentric worm-drive pumps with mechanical seal and planetary gear version

| Type | F 550 GS6-50/21 | F 550 GS6-54/26 | F 550 GS6XB-50/21 |
|---|---|---|---|
| Delivery rate max. | 13 l/min | 20 l/min | 30 l/min |
| Delivery head max. | 8 bar | | |
| Thread on outlet | G 1½ A (BSP 1½" male) | | |
| Seal type | mechanical seal in ceramic oxide, o-rings in FKM | | |
| Material | outer tube, torsion shaft and eccentric worm in stainless steel 316 Ti | | |
| Outer-Ø | 50 mm | 54 mm | 50 mm |
| Stator | not included with the pump, separate part number please see list below | | PTFE black |
| **Ex-marking** | | | II 1/2 G II B T4 |
| **Part No.**/Weight | | | |
| Immersion length 700 mm | **10-550 23 200**/4,3 kg | **10-550 23 300**/4,8 kg | – |
| Immersion length 1.000 mm | **10-550 23 201**/5,0 kg | **10-550 23 301**/5,5 kg | **10-550 23 221**/5,25 kg |
| Immersion length 1.200 mm | **10-550 23 202**/5,5 kg | **10-550 23 302**/6,0 kg | – |

**Also available:**

- Version with cardan shaft for higher torque

## Stators for eccentric worm-drive pumps type F 550 GS6

| Material | Temperature | Recommended for | Part No./Weight outer-Ø 50 mm | Part No./Weight outer-Ø 54 mm |
|---|---|---|---|---|
| NBR white (Nitrile Butadiene Rubber) elastomer | max. 90 °C | particularly suitable for oils and greases, also for food products | **10-550 24 248**/0,5 kg | **10-550 25 621**/0,6 kg |
| NBR black (Nitrile Butadiene Rubber) elastomer | max. 90 °C | particularly suitable for oils and greases, not suitable for food products | **10-550 24 244**/0,5 kg | **10-550 25 620**/0,6 kg |
| FKM (Fluor Rubber) elastomer | max. 120 °C | excellent chemical resistance to all different kind of products, not suitable for food products | **10-550 24 247**/0,5 kg | **10-550 25 619**/0,6 kg |
| PTFE (Ethylene-Tetra-Fluor-Ethylene) solid material | max. 120 °C | excellent chemical resistance, particularly suitable for food products, pharmaceuticals and cosmetics | **10-550 24 256**/0,6 kg | **10-550 25 625**/0,7 kg |

## Hose connection in stainless steel complete with union nut G 1½

| Type F 550 GS6 | Part No./Weight |
|---|---|
| For flexible hose, inside Ø **DN 25** | **10-959 04 002**/0,2 kg |
| For flexible hose, inside Ø **DN 32** | **10-959 04 003**/0,3 kg |
| For flexible hose, inside Ø **DN 38** | **10-959 04 004**/0,4 kg |

## Drive motors for eccentric worm-drive pumps type F 550 GS6

**Single-phase AC motors with capacitor switch, 230 Volt, 50 Hz, jet-proof to IP 55, with motor protection switch, 5 m cable and plug**

| Type | Capacity | Speed | Max. Viscosity | Part No./Weight |
|---|---|---|---|---|
| F 403/2 | 0,50 kW | 2850 rpm | 30.000 mPas | **10-403 01 015**/8,0 kg |
| F 403/4 | 0,55 kW | 1450 rpm | 80.000 mPas | **10-403 01 016**/11,0 kg |

**Three-phase motors 230/400 Volt, 50 Hz, jet-proof to IP 55, with motor protection switch, without cable**

| Type | Capacity | Speed | Max. Viscosity | Part No./Weight |
|---|---|---|---|---|
| F 403/4 | 0,55 kW | 1450 rpm | 80.000 mPas | **10-403 01 011**/8,0 kg |
| F 403/2 | 0,75 kW | 2850 rpm | 50.000 mPas | **10-403 01 021**/8,0 kg |

**Three-phase motors 230/400 Volt, 50 Hz, explosion-proof to II 2 G EEx e II T3, with cable terminal box, without cable**

| Type | Capacity | Speed | Max. Viscosity | Part No./Weight |
|---|---|---|---|---|
| F 403/6 Ex | 0,55 kW | 930 rpm | 80.000 mPas | **10-403 01 018**/10,0 kg |
| F 403/4 Ex | 0,55 kW | 1450 rpm | 80.000 mPas | **10-403 01 017**/8,0 kg |
| F 403/2 Ex | 0,75 kW | 2850 rpm | 50.000 mPas | **10-403 01 019**/8,0 kg |

| Accessories | Part No./Weight |
|---|---|
| **Carrying handle,** stainless steel for IP 55 motors | **10-001 10 584**/1,0 kg |
| **Carrying handle,** stainless steel for explosion-proof motors | **10-001 10 587**/1,0 kg |

# Eccentric worm-drive pumps with bearing flange for use in horizontal version

**Recommended for transferring**
Thin to high viscosity, even pasty, still free flowing substances.

**Typical applications**
Eccentric worm-drive pumps Type F 550 TR and F 560 TR are designed for horizontal use.
A base plate or a pump trolley facilitates the installation with a three-phase electric motor.

This pump design is available in different versions:

Type F 550 SF TR with bearing flange in stainless steel and clamp connection between outer tube and stator housing is recommended for use in pharmaceutical and food industries.

Type F 560 S TR with bearing flange in stainless steel and clamp connection between outer tube and stator housing is recommended for use in cosmetics, food and pharmaceutical industries.
The pump can be stripped down in no time for cleaning and/or sterilisation.
A special shaft design allows reversible flow operations.

**Available drive motors**
Three-phase electric motors with bottom flange

**Scope of supply**
A complete horizontal pump consists of:
drive motor, pump and PTFE stator, hose connection on inlet and outlet, base plate or pump trolley.

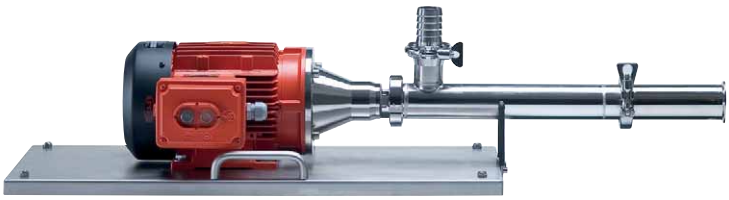

F 550 S-54/26 TR with three-phase motor




1

F 560 S-54/26 TR
with three-phase motor

## Technical data

| Type | Viscosity mPas (cP) | Curve No. |
|---|---|---|
| F 550 S-54/26 TR | 1 | 1 |
| F 560 S-54/26 TR | 1.000–2.000 | 2 |
| | 20.000–25.000 | 3 |

With higher viscosities delivery rate will be lower, depending on the velocity of the fluid.

**Performance Chart**

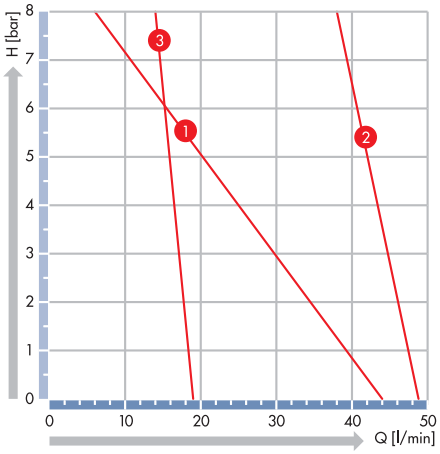


Values ± 10 % at 930 rpm. Delivery rate depends on the velocity of the fluid.

1 Ex-proof versions available

## Eccentric worm-drive pumps type F 550 and F 560 with bearing flange for use in horizontal version

| Type | F 550 S3-54/26 GW TR | | F 560 S2-54/26 TR L/R | F 560 S-54/26 TR L/R [1] |
|---|---|---|---|---|
| Direction | one direction | | clockwise / anticlockwise | |
| Delivery rate max. | 50 l/min | | | |
| Delivery head max. | 8 bar | | | |
| Connection<br>Suction side<br>Discharge connection | <br>Clamp 2″<br>Clamp 2″ | | <br>Clamp 2″<br>G 1 ½ A | <br>Clamp 2″<br>Clamp 2″ |
| Seal type | mechanical seal in ceramic oxide, o-rings in FKM | | | |
| Shaft | pinned cardan shaft | | | cardan shaft, pinned, easily detachable |
| Material | bearing flange in aluminium; flexible shaft and eccentric worm in stainless steel 316 Ti | | bearing flange, shaft and eccentric worm in stainless steel 316 Ti | |
| Outer-Ø | 54 | | | |
| Stator | PTFE | | not included in the delivery | |
| Ex-marking | Ex II 2G c IIB TX | – | – | – |
| **Part No.** | **10-550 23 634** | **10-550 23 664** | **10-560 23 202** | **10-560 23 200** |

| | **Part No.**/Weight |
|---|---|
| **Base plate in stainless steel (316 Ti)** | **10-001 15 033**/5,6 kg |
| **Pump trolley in stainless steel (304)** | **10-001 15 038**/9,0 kg |

## Hose connection in stainless steel, complete with union nut or clamp connection

| **Part No.**/Weight | **Type F 550 S TR**<br>Outlet G 1½ A<br>(BSP 1½ male) | **Type F 550 S TR**<br>Inlet G 2 A<br>(BSP 2″ male) | **Type F 550 S TR**<br>Clamp 2″ |
|---|---|---|---|
| For flexible hose, inside Ø **DN 25** | **10-959 04 002**/0,2 kg | – | – |
| For flexible hose, inside Ø **DN 32** | **10-959 04 003**/0,3 kg | **10-959 04 059**/0,3 kg | **10-959 04 137**/0,4 kg |
| For flexible hose, inside Ø **DN 38** | **10-959 04 004**/0,4 kg | **10-959 04 060**/0,4 kg | **10-959 04 109**/0,4 kg |

## Drive Motors with bottom flange for eccentric worm-drive pumps type F 550 S TR and F 560 S TR

Three-phase motors 230/400 Volt, 50 Hz, jet-proof IP 55, with motor protection switch, without cable

| **Capacity** | **Speed** | **Part No.**/Weight |
|---|---|---|
| 0,75 kW | 700 rpm | **10-001 02 151**/22,0 kg |
| 1,1 kW | 930 rpm | **10-001 02 159**/17,0 kg |

Drive motors with bottom flange in other capacities on request.
Accessories for drive motors see page 16

[1] Products conform to EG 1935/2004 and EU 10/2011 available

# Drive motors for eccentric worm-drive pumps

**Drive motors for eccentric worm-drive pumps type F 550 and F 560***
**version with bearing flange**



Three-phase motor



Compressed-air motor

**Three-phase motors 230/400 Volt, 50 Hz, with motor protection switch, without cable**

| Capacity | Speed | Jet-proof to | Max. Viscosity | Part No./Weight |
|---|---|---|---|---|
| 0,75 kW | 930 rpm | IP 55 | 25.000 mPas (cP) | **10-001 01 052**/12,5 kg |
| 0,75 kW | 700 rpm | IP 55 | pasty | **10-001 01 546**/22,0 kg |
| 1,1 kW | 930 rpm | IP 55 | 50.000 mPas (cP) | **10-001 01 053**/16,0 kg |
| 1,1 kW | 700 rpm | IP 55 | pasty | **10-001 01 547**/23,0 kg |

**Three-phase motors 230/400 Volt, 50 Hz, with cable terminal box, without cable**

| Capacity | Speed | Jet-proof to | Max. Viscosity | Part No./Weight |
|---|---|---|---|---|
| 0,75 kW | 930 rpm | IP 55 | 25.000 mPas (cP) | **10-001 01 030**/12,5 kg |
| 0,75 kW | 700 rpm | IP 55 | pasty | **10-001 01 506**/22,0 kg |
| 1,1 kW | 930 rpm | IP 55 | 50.000 mPas (cP) | **10-001 01 031**/16,0 kg |
| 1,1 kW | 700 rpm | IP 55 | pasty | **10-001 01 507**/23,0 kg |

**Three-phase motors 230/400 Volt, 50 Hz, explosion-proof, with cable terminal box, without cable**

| Capacity | Speed | Explosion-proof to | Max. Viscosity | Part No./Weight |
|---|---|---|---|---|
| 0,75 kW | 930 rpm | II 2 G EEx e II T3 | 25.000 mPas (cP) | **10-001 01 066**/15,0 kg |
| 1,1 kW | 930 rpm | II 2 G EEx e II T4 | 50.000 mPas (cP) | **10-001 01 067**/18,0 kg |
| 0,95 kW | 700 rpm | II 2 G EEx e II T4 | pasty | **10-001 01 567**/22,0 kg |

*drive motors for sanitary pumps in special white painting on request

| Accessories | Part No./Weight |
|---|---|
| **Carrying handle,** stainless steel | |
| for three-phase motors, not explosion-proof | **10-001 10 571**/1,0 kg |
| for three-phase motors, explosion-proof | **10-001 10 586**/1,2 kg |
| **Power supply cable,** 5 m long with plug | **10-934 08 020**/1,4 kg |
| 5 m long without plug | **10-934 08 025**/1,3 kg |
| yardware | **10-934 08 901**/0,2 kg |
| **Cekon-plug,** 5-pole | **10-937 01 014**/0,1 kg |
| **Motor protection switch, explosion-proof to II 2 G EEx de IIC T6** | |
| 0,75 kW, 700 and 930 rpm, range of setting 1,6 – 2,5 A | **10-936 06 118**/2,6 kg |
| 0,95 and 1,1 kW, 700 and 930 rpm, range of setting 2,5 – 4,0 A | **10-936 06 119**/2,6 kg |

**Compressed-air motors, max. operating pressure 7 bar, explosion-proof to II 2 G D c T4**

| Type | Capacity | Speed at 6 bar | Connection | Max. Viscosity | Part No./Weight |
|---|---|---|---|---|---|
| **FPM 4 Ex** | 0,5 kW | 1000 rpm | G ⅜ (BSP ⅜" female) | 25.000 mPas (cP) | **10-001 04 000**/5,0 kg |
| **FPM 6 Ex** | 1,1 kW | 1000 rpm | G ½ (BSP ½" female) | 50.000 mPas (cP) | **10-001 04 014**/7,0 kg |
| **FPM 8 Ex** | 1,8 kW | 1000 rpm | G ½ (BSP ½" female) | pasty | **10-001 04 002**/10,0 kg |

| Accessories | Part No/Weight |
|---|---|
| **Carrying handle,** stainless steel | **10-001 10 520**/1,0 kg |
| **Filter-regulator-lubricator unit,** connection G ½ (BSP ½" female) | **10-001 10 103**/1,9 kg |
| **Compressed-air hose,** in PVC, DN 13, yardware | **10-001 10 008**/0,2 kg |
| **Hose coupling,** brass, for compressed-air hose DN 13 | **10-959 13 122**/0,1 kg |
| **Nipple,** brass, for hose coupling DN 13 – G ½ A (BSP ½" male) | **10-959 13 121**/0,1 kg |
| **Hose nozzle,** brass, for compressed-air hose, DN 13 – G ½ A (BSP ½" male) | **10-959 05 017**/0,1 kg |

## Drive motors for eccentric worm-drive pumps type F 550 and F 560 version with planetary gear


FEM 4070


F 457/F 457 EL


F 458/F 458-1


F 460 Ex/F 460-1 Ex

**Commutator motors 230 V, 50 Hz, 5 m cable and plug**

| Type | Capacity | Protected to | Max. Viscosity | Part No./Weight version with NVR* | Part No./Weight version without NVR* |
|---|---|---|---|---|---|
| **FEM 4070** | 500 Watt | splash proof IP 24 | 10.000 mPas (cP) | **10-407 01 000**/2,6 kg | **10-407 01 001**/2,6 kg |
| **F 457** | 800 Watt | splash proof IP 24 | 30.000 mPas (cP) | **10-457 01 005**/4,0 kg | **10-457 01 002**/4,0 kg |
| **F 457 EL**** | 800 Watt | splash proof IP 24 | 30.000 mPas (cP) | **10-457 01 003**/4,0 kg | **10-457 01 041**/4,0 kg |
| **F 458** | 460 Watt | jet-proof to IP 55 | 12.000 mPas (cP) | **10-458 00 006**/5,1 kg | **10-458 00 001**/5,1 kg |
| **F 458 EL**** | 460 Watt | jet-proof to IP 55 | 12.000 mPas (cP) | **10-458 00 027**/5,1 kg | – |
| **F 458-1** | 700 Watt | jet-proof to IP 55 | 25.000 mPas (cP) | **10-458 01 004**/5,9 kg | **10-458 01 001**/5,9 kg |
| **F 460 Ex** | 460 Watt | II 2 G Ex de IIC T6 Gb | 12.000 mPas (cP) | **10-460 00 006**/5,1 kg | **10-460 00 001**/5,1 kg |
| **F 460 Ex EL**** | 460 Watt | II 2 G Ex de IIC T6 Gb | 12.000 mPas (cP) | **10-460 00 028**/5,1 kg | – |
| **F 460-1 Ex** | 700 Watt | II 2 G Ex de IIC T6 Gb | 25.000 mPas (cP) | **10-460 01 004**/5,9 kg | **10-460 01 001**/5,9 kg |

NVR* = no-volt release EL** = version with infinitely variable speed variator

| Accessories | Part No./Weight |
|---|---|
| **Carrying handle,** steel painted in black<br>for drive motor Type F 457<br>for drive motors Type F 458 and F 460 Ex | <br>**10-001 10 533**/0,3 kg<br>**10-001 10 557**/0,3 kg |


F 416 Ex


F 416-1 Ex


F 416-2 Ex

**Compressed air motors, max. operating pressure 6 bar, thread for compressed air hose G ¼ (BSP ¼" female)**

| Type | Capacity | Explosion-proof to | Max. Viscosity | Version | Part No./Weight |
|---|---|---|---|---|---|
| **F 416 Ex** | 470 Watt | II 2 G cp IIC T6 | 30.000 mPas (cP) | with trigger valve | **10-416 00 100**/1,4 kg |
| **F 416-1 Ex** | 470 Watt | II 2 G cp IIC T6 | 30.000 mPas (cP) | without valve | **10-416 00 020**/0,9 kg |
| **F 416-2 Ex** | 470 Watt | II 2 G cp IIC T6 | 30.000 mPas (cP) | with ball valve | **10-416 00 030**/1,0 kg |

| Accessories | Part No./Weight |
|---|---|
| **Filter-regulator-lubricator unit,** connection G ¼ (BSP ¼" female) | **10-001 10 100**/1,0 kg |
| **Compressed-air hose,** electrically conductive, DN 10, yardware | **10-001 10 098**/0,2 kg |
| **Hose coupling,** brass, for compressed-air hose DN 10 | **10-959 13 066**/0,1 kg |
| **Nipple** brass, for hose coupling DN 10 – G ¼ A (BSP ¼" male) | **10-959 13 065**/0,1 kg |
| **Hose nozzle,** brass, for compressed-air hose, DN 10 – G ¼ A (BSP ¼" male) | **10-959 05 022**/0,1 kg |

Further accessories for drive motors please see special brochure FLUX ACCESSORIES.

# Viscosity Chart

| Media | Viscosity | Temperature |
|---|---|---|
| Alkyd resins | 500–3.000 mPas (cP) | 20 °C |
| Apple-purée | 1.500 mPas (cP) | 20 °C |
| Baby food | 1.400 mPas (cP) | 40 °C |
| Brewers's yeast | 370 mPas (cP) | 20 °C |
| Butter | 30.000 mPas (cP) | 40 °C |
| Butter cream, sour | 550 mPas (cP) | 20 °C |
| Butter fat | 45 mPas (cP) | 40 °C |
| Castor oil | 2.420 mPas (cP) | 10 °C |
| Castor oil | 1.000–1.500 mPas (cP) | 20 °C |
| Caustic soda 50 % | 45 mPas (cP) | 20 °C |
| Chocolate confectionery | 2.600 mPas (cP) | 40 °C |
| Chocolate sauce | 280 mPas (cP) | 50 °C |
| Cleaning emulsions | 1.500 mPas (cP) | 70 °C |
| Cocao butter | 50 mPas (cP) | 60 °C |
| Cocao paste | 4.000 mPas (cP) | 20 °C |
| Coconut oil | 80 mPas (cP) | 20 °C |
| Cod-liver oil | 35 mPas (cP) | 40 °C |
| Corn oil | 30 mPas (cP) | 60 °C |
| Cotton seed oil | 60 mPas (cP) | 20 °C |
| Cream, 30–50 % fat | 11–115 mPas (cP) | 20 °C |
| Dental adhesive | 30.000 mPas (cP) | 20 °C |
| Dipropyleneglycol | 107 mPas (cP) | 20 °C |
| Evaporated milk | 80 mPas (cP) | 40 °C |
| Evaporated milk, sweetened | 6.100 mPas (cP) | 20 °C |
| Fruit juice | 50 mPas (cP) | 20 °C |
| Fruit juice concentrate | 1.500 mPas (cP) | 20 °C |
| Fruit mash | 600 mPas (cP) | 20 °C |
| Gelatine | 1.200 mPas (cP) | 45 °C |
| Glucose | 4.300–6.800 mPas (cP) | 25–30 °C |
| Glycerine 100 % | 4.500 mPas (cP) | 10 °C |
| Glycerine 100 % | 1.490 mPas (cP) | 20 °C |
| Glycol | 20 mPas (cP) | 20 °C |
| Gravy | 110 mPas (cP) | 80 °C |
| Hand creme | 8.000 mPas (cP) | 20 °C |
| Honey | 2.000 mPas (cP) | 40 °C |
| Jam | 8.500 mPas (cP) | 20 °C |
| Lacquers (25 % pigments) | 3.000 mPas (cP) | 20 °C |
| Lard | 65 mPas (cP) | 40 °C |
| Latex emulsions | 200 mPas (cP) | 20 °C |
| Linseed oil | 55 mPas (cP) | 20 °C |
| Liqueurs | 10–100 mPas (cP) | 20 °C |
| Liquid egg | 150 mPas (cP) | 45 °C |
| Liquid soap | 85 mPas (cP) | 60 °C |
| Liquid wax | 500 mPas (cP) | 90 °C |
| Lubricating oil | 60–200 mPas (cP) | 20 °C |
| Machine oil, heavy | 600 mPas (cP) | 20 °C |
| Machine oil, light | 150 mPas (cP) | 20 °C |
| Malt extract | 9.500 mPas (cP) | 20 °C |
| Mayonnaise | 2.000 mPas (cP) | 20 °C |

| Media | Viscosity | Temperature |
|---|---|---|
| Molasses 80° Bx | 10.000 mPas (cP) | 20 °C |
| Molasses 83° Bx | 50.000 mPas (cP) | 20 °C |
| Molasses 85° Bx | 100.000 mPas (cP) | 20 °C |
| Motor oil SAE 10W | 160 mPas (cP) | 20 °C |
| Motor oil SAE 140 | 2.300 mPas (cP) | 20 °C |
| Motor oil SAE 20W | 160 mPas (cP) | 20 °C |
| Motor oil SAE 30 | 380 mPas (cP) | 20 °C |
| Motor oil SAE 40 | 600 mPas (cP) | 20 °C |
| Motor oil SAE 50 | 900 mPas (cP) | 20 °C |
| Motor oil SAE 5W | 50 mPas (cP) | 20 °C |
| Motor oil SAE 90 | 700 mPas (cP) | 20 °C |
| Oleic acid | 40 mPas (cP) | 20 °C |
| Olive oil | 85 mPas (cP) | 20 °C |
| Palm oil | 130 mPas (cP) | 20 °C |
| Paraffin emulsion | 3.000 mPas (cP) | 20 °C |
| Peanut oil | 40 mPas (cP) | 40 °C |
| Polyester resin | 3.000 mPas (cP) | 30 °C |
| Polyglycerine caprinate | 6.000–7.000 mPas (cP) | 15 °C |
| Polymer solution | 20.000 mPas (cP) | 20 °C |
| Polyol (A-Component) | 85.000 mPas (cP) | 10 °C |
| Polyol, non-pigmented | 500–5.000 mPas (cP) | 20 °C |
| Potassium hydroxide | 67 mPas (cP) | 20 °C |
| Printing ink (and colours) | 550–2.200 mPas (cP) | 40 °C |
| Pudding | 1.000 mPas (cP) | 40 °C |
| Rapeseed oil | 160 mPas (cP) | 20 °C |
| Resin solution | 7.100 mPas (cP) | 20 °C |
| Salad dressing | 1.300–2.600 mPas (cP) | 20 °C |
| Salad oil | 65 mPas (cP) | 20 °C |
| Shampoo | 3.000 mPas (cP) | 20 °C |
| Soft cheese | 30.000 mPas (cP) | 60 °C |
| Soybean oil | 80 mPas (cP) | 20 °C |
| Soybean oil, treated | 600–800 mPas (cP) | 20 °C |
| Starch solution 25° Baumé | 300 mPas (cP) | 20 °C |
| Steam turbine oil | 300–1.100 mPas (cP) | 20 °C |
| Sugar solution 65° Bx | 120 mPas (cP) | 20 °C |
| Sugar solution 70° Bx | 400 mPas (cP) | 20 °C |
| Tomato ketchup | 1.000 mPas (cP) | 30 °C |
| Tomato paste | 195 mPas (cP) | 20 °C |
| Tooth paste | 70.000 mPas (cP) | 40 °C |
| Train oil | 100 mPas (cP) | 20 °C |
| Transformer oil | 30 mPas (cP) | 30 °C |
| Transformer oil | 75 mPas (cP) | 10 °C |
| Vegetable soup | 430 mPas (cP) | 20 °C |
| Vitamin oil | 4.500 mPas (cP) | 10 °C |
| Water-based lacquer | 900 mPas (cP) | 20 °C |
| Whey | 800–1.500 mPas (cP) | 40 °C |
| Whipped foods | 1.500 mPas (cP) | 40 °C |
| White oil | 300 mPas (cP) | 20 °C |
| Yogurt | 150 mPas (cP) | 40 °C |

The media listed above have to be considered as examples only, as their viscosity may change substantially due to different composition and/or other temperatures. An in-service test will provide the utmost certainty in selecting the most suitable pump type. This applies especially to „Non-Newtonian liquids", the exact viscosity of which is difficult to define and may change during pumping operation (intrinsic viscosity). FLUX sales representatives will be at your disposal for an individual demonstration.

**F 550 S**

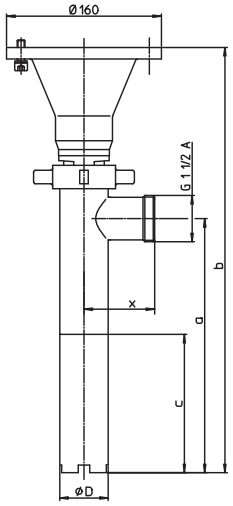


**F 560 S**

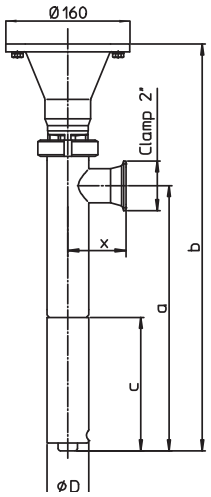


| Type | | | | F 550 S-50/21 | | F 560 S-50/21 | |
|---|---|---|---|---|---|---|---|
| **Dimensions in mm** | **ØD** | **x** | **a** | **b** | **c** | **b** | **c** |
| Immersion length 700 mm | 50 | 73 | 714 | 897 | 143 | 897 | 145 |
| Immersion length 1.000 mm | 50 | 73 | 1014 | 1197 | 143 | 1197 | 145 |
| Immersion length 1.200 mm | 50 | 73 | 1214 | 1397 | 143 | 1397 | 145 |
| **Type** | | | | **F 550 S-54/26** | | **F 560 S-54/26** | |
| **Dimensions in mm** | **ØD** | **x** | **a** | **b** | **c** | **b** | **c** |
| Immersion length 700 mm | 54 | 75 | 740 | 923 | 170 | 924 | 172 |
| Immersion length 1.000 mm | 54 | 75 | 1040 | 1223 | 170 | 1224 | 172 |
| Immersion length 1.200 mm | 54 | 75 | 1240 | 1423 | 170 | 1424 | 172 |

**F 550 GS**

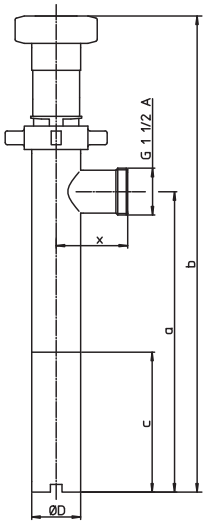


**F 560 GS**

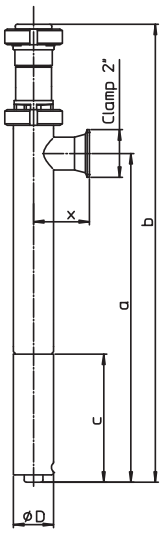


| Type | | | | F 550 GS-50/21 | | F 560 GS-50/21 | |
|---|---|---|---|---|---|---|---|
| **Dimensions in mm** | **ØD** | **x** | **a** | **b** | **c** | **b** | **c** |
| Immersion length 700 mm | 50 | 73 | 714 | 887 | 143 | 887 | 145 |
| Immersion length 1.000 mm | 50 | 73 | 1014 | 1187 | 143 | 1187 | 145 |
| Immersion length 1.200 mm | 50 | 73 | 1214 | 1387 | 143 | 1387 | 145 |
| **Type** | | | | **F 560 GS-54/26** | | | |
| **Dimensions in mm** | **ØD** | **x** | **a** | **b** | **c** | | |
| Immersion length 700 mm | 54 | 75 | 740 | 914 | 172 | | |
| Immersion length 1.000 mm | 54 | 75 | 1040 | 1214 | 172 | | |
| Immersion length 1.200 mm | 54 | 75 | 1240 | 1414 | 172 | | |

# Dimensions

## F 550 GS6

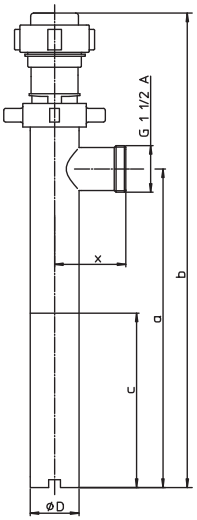


| Type | F 550 GS6-50/21 | | | | | F 550 GS6-54/26 | | | | |
|---|---|---|---|---|---|---|---|---|---|---|
| **Dimensions in mm** | **ØD** | **x** | **a** | **b** | **c** | **ØD** | **x** | **a** | **b** | **c** |
| Immersion length 700 mm | 50 | 73 | 713 | 867 | 143 | 54 | 75 | 740 | 894 | 170 |
| Immersion length 1.000 mm | 50 | 73 | 1013 | 1.167 | 143 | 54 | 75 | 1.040 | 1194 | 170 |
| Immersion length 1.200 mm | 50 | 73 | 1213 | 1.367 | 143 | 54 | 75 | 1.240 | 1394 | 170 |

## F 550 S-54/26 TR

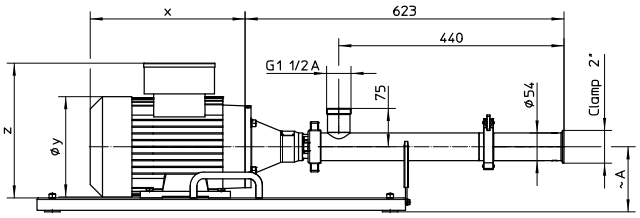


## Console

Length: 720 mm
Width: 350 mm

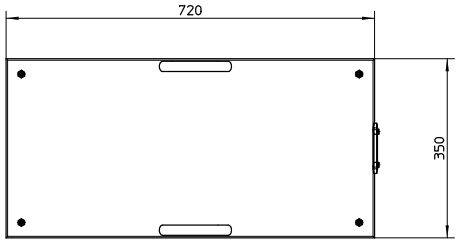


## Pump trolley with pump F 560 S-54/26 TR

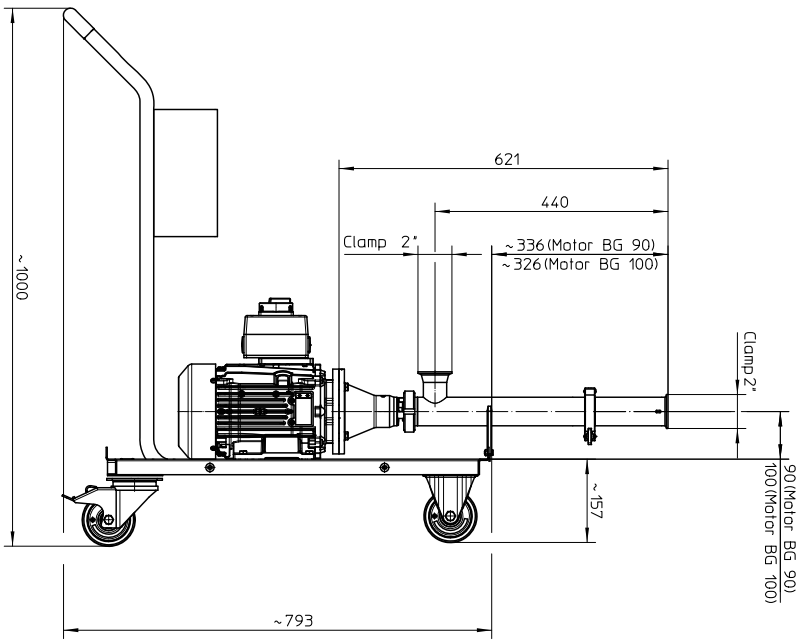

## Three-phase motor for pumps with flange

**TPM IP 55**

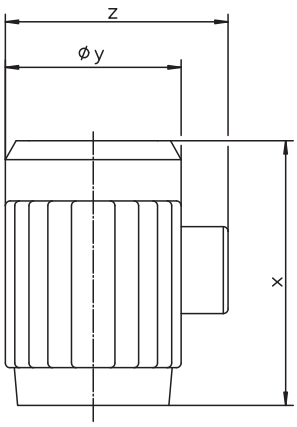


**TPM Ex**

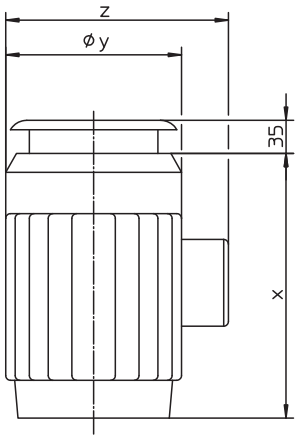


**Three-phase motors (TPM), jet-proof to IP 55, for use with F 550 S and F 560 S**

| | | | | Z | |
|---|---|---|---|---|---|
| **Capacity** | **Speed** | **X** | **ØY** | **KK** | **MSS** |
| 0,75 kW | 930 rpm | 286 | 182 | 244 | 305 |
| 0,75 kW | 700 rpm | 303 | 196 | 254 | 314 |
| 1,1 kW | 930 rpm | 303 | 182 | 244 | 305 |
| 1,1 kW | 700 rpm | 303 | 196 | 254 | 314 |

**Three-phase motors (TPM), explosion-proof, for use with F 550 S and F 560 S**

| **Capacity** | **Speed** | **X** | **ØY** | **Z (KK)** |
|---|---|---|---|---|
| 0,75 kW | 930 rpm | 244 | 176 | 237 |
| 1,1 kW | 930 rpm | 269 | 176 | 237 |
| 0,95 kW | 700 rpm | 303 | 196 | 256 |
| 1,1 kW | 700 rpm | 303 | 196 | 252 |

## Motors for pumps with planetary gear GS6

**SPM**

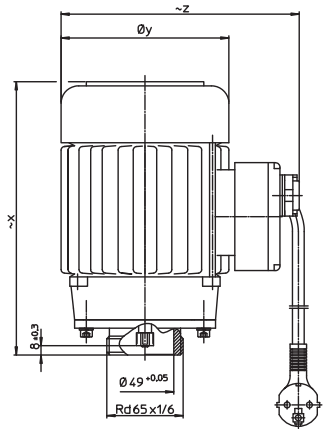


**TPM**

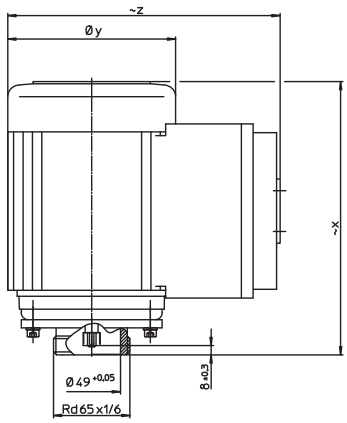


**Single-phase motor (SPM) with capacitor switch, for use with F 550 GS6**

| **Type** | **Capacity** | **Speed** | **X** | **ØY** | **Z (KK)** |
|---|---|---|---|---|---|
| F 403/2 | 0,50 kW | 2.850 rpm | 233 | 143 | 203 |
| F 403/4 | 0,55 kW | 1.450 rpm | 259 | 160 | 208 |

**Three-phase motor (TPM), jet-proof to IP 55, for use with F 550 GS6**

| **Type** | **Capacity** | **Speed** | **X** | **ØY** | **Z (MSS)** |
|---|---|---|---|---|---|
| F 403/4 | 0,55 kW | 1.450 rpm | 233 | 143 | 257 |
| F 403/2 | 0,75 kW | 2.850 rpm | 259 | 160 | 277 |

KK = cable terminal box
MSS = Motor protection switch

# Dimensions

**Compressed-air motors**

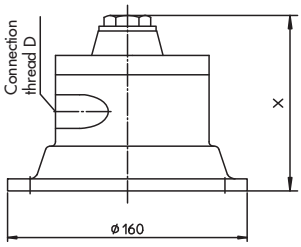


**for use with F 550 S and F 560 S version with bearing flange**

| Type | Capacity | Speed | X | Connection thread D |
|---|---|---|---|---|
| FPM 4 Ex | 0,5 kW | 1000 rpm | 117 | G ⅜ (BSP ⅜" female) |
| FPM 6 Ex | 1,1 kW | 1000 rpm | 155 | G ½ (BSP ½" female) |
| FPM 8 Ex | 1,8 kW | 1000 rpm | 177 | G ½ (BSP ½" female) |

**Drive motors for F 550 and F 560 version with planetary gear GS**

**FEM 4070**

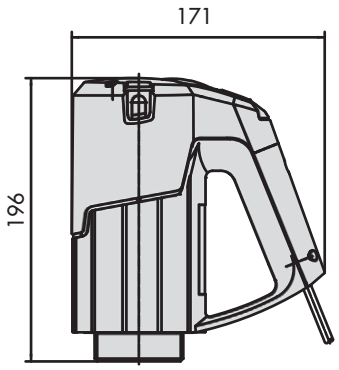


**F 457/F 457 EL**

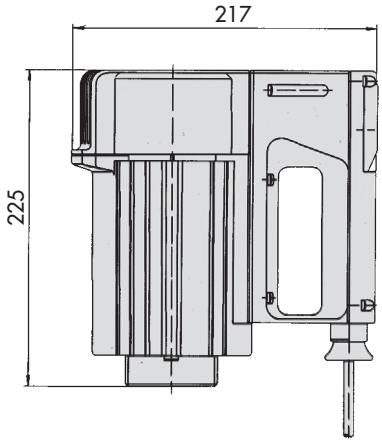


**F 458/F 458 EL/F 458-1/ F 460 Ex/F 460 Ex EL/ F 460-1 Ex**

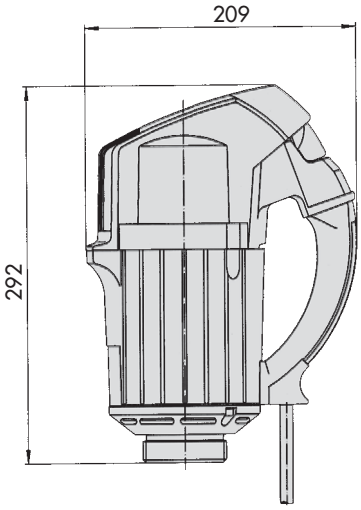


**Compressed-air motor for F 550 and F 560 with planetary gear GS**

**F 416 Ex**

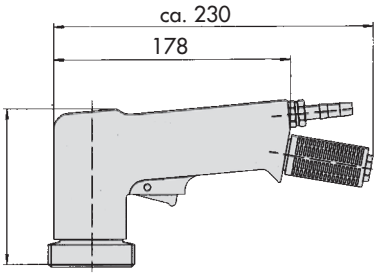


**F 416-1 Ex**

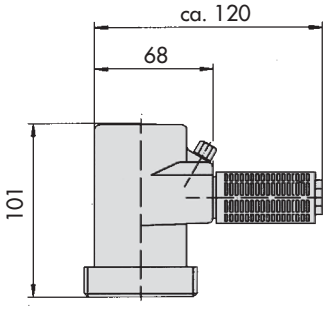


**F 416-2 Ex**

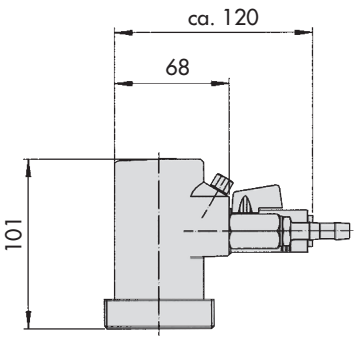


**With motor and pump assembled, the total length reduces by 16 mm**



## VISCOFLUX lite / VISCOFLUX lite Ex

**The FLUX specialist for transferring higher-viscosity media that are just capable of flowing**

The drum emptying system VISCOFLUX lite is used to transfer higher-viscosity media which are just capable of flowing, out of ISO drums with lid. In the Ex version it is suitable for the use in hazardous areas of zone 1 and for transferring a wide variety of flammable media (zone 0/1). The system transports the media gently and continuously. Like the VISCOFLUX and the VISCOFLUX mobile, the VISCOFLUX lite leaves just less than 1 % of the media in the drum.

**Advantages**
- **Resource-saving – up to less than 1 % residue**
  Efficient use of the medium and low expenditure for disposal
- **Ex-Version available** For applications in zone 0/1
- **Continuous and gentle transport** No structural change of the medium
- **Customised solution** Due to individual selection of drive motor in combination with matching eccentric worm-drive pump
- **Quick to install** With few components
- **For ISO drums** Ø 571 mm
- **For sea container drums** Ø 540 mm at the top, Ø 571 mm at the bottom

(For more information please have a look on the brochure VISCOFLUX lite)



## VISCOFLUX

**The FLUX specialist for highly viscous materials**

The unique VISCOFLUX drum emptying system is used by various industries for fast, cost-effective conveying of highly viscous, pasty and non-free flowing. It guarantees virtually complete and gentle emptying from standard drums with lids.

**Advantages**
- **Low initial purchase costs** Compared to stationary systems
- **High flexibility** Due to mobility of the system
- **Low disposal costs** Due to small residual quantity in the drum
- **Process safety** Even if the pumping process is interrupted during emptying due to hermetic sealing off the material
- **Fast cleaning** Thanks to dismantling with a few hand movements

(For more information please have a look on the brochure VISCOFLUX)



## VISCOFLUX mobile

**The stand-alone solution for transferring high-viscosity fluids**

VISCOFLUX mobile is a portable and thus very flexible variant of the tried and tested VISCOFLUX drum emptying system. VISCOFLUX mobile is ideal for the gentle conveyance of high-viscosity, paste-like and non-free flowing materials, even from conical drums with aseptic bags. Industrial and Pharma Food Cosmetic versions are available - each for various drum diameters.

**Advantages**
- **Mobile use** Can be moved to the drum without a crane or fork-lift truck
- **Low space requirement** Can be transported even in lifts
- **One transfer system for different drum types** Also suitable for conical drums and for drums which have suffered the usual transportation dents
- **Energy savings** Usually no heating of the medium necessary
- **No structural change to the medium** Due to gentle, continuous transport
- **Completely made of stainless steel**

(For more information please have a look on the brochure VISCOFLUX mobile)

More than just pumps





Today the FLUX name is recognised around the globe as the trademark for top standards in pump technology. Everything started with the invention of the electric drum pump in 1950. Nowadays FLUX has an extensive range of products each of which can be customized. FLUX pumps are used for example in the chemical and pharmaceutical industries; in machinery and plant engineering as well as companies in electroplating, effluent treatment and the foodstuffs sector.

Whether single-product or system solution – FLUX quality is synonymous with a long service life, excellent economy and maximum safety.

In addition to the excellent product quality FLUX customers appreciate the superb level of expertise our staff has to offer as well as their genuine customer focus.

These days FLUX-GERÄTE GMBH supplies pumps to almost 100 countries around the globe.

FLUX-GERÄTE GMBH
Talweg 12 · D-75433 Maulbronn
Tel +49 7043 101-440 · Fax +49 7043 101-444
info@flux-pumpen.de · www.flux-pumps.com

ESP 0917 / 10-005 83 012 / 1-E printed in Germany