Rotary vane pump-motor unit GA series

The GA pump-motor unit has been designed to extend the Fluid-o-Tech® rotary vane pump range to the low flow rates.
Coupled to a compact but powerful 24 V DC brush or brushless motor, the unit has been designed to deliver a maximum pressure of 10 bar (145 psi) and grant a long service life while fitting in tight spaces.
The pump has a stainless steel housing and carbon graphite parts and it benefits from an integrated pressure relief valve.
The use of food grade materials throughout the construction makes it the ideal choice for integration into a wide range of potable water installation.



MAIN APPLICATIONS

- Espresso coffee machines
- Water treatment systems

TECHNICAL INFORMATION

Pump housing material	Stainless steel	Max static pressure	10 bar/145 psi
Pumping chamber	Carbon graphite	Relief valve	Balanced
Ports	1/4 GAS"; 1/4" NPT	Unit weight	1417 gr (3.1 lb) brushless 1664 gr (3.7 lb) brush
Speed limit for brushless motor	3000 rpm		

GA0072 - 24 V D56 H102 BRUSH MOTOR (90-54-37)

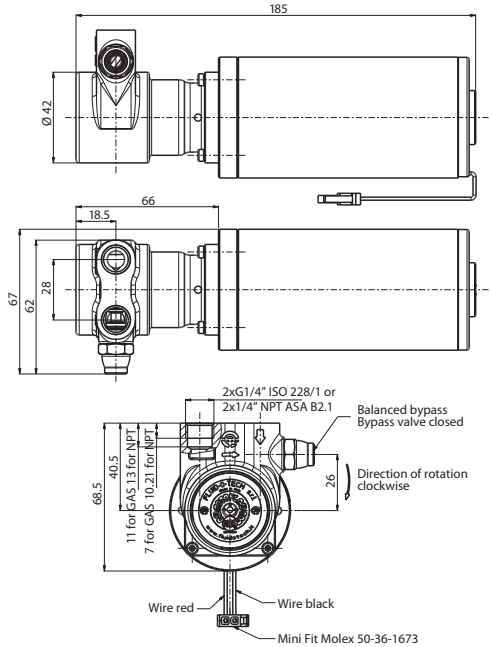

GA0102 - 24 V 42x100 mm BRUSHLESS MOTOR (90-93-02)

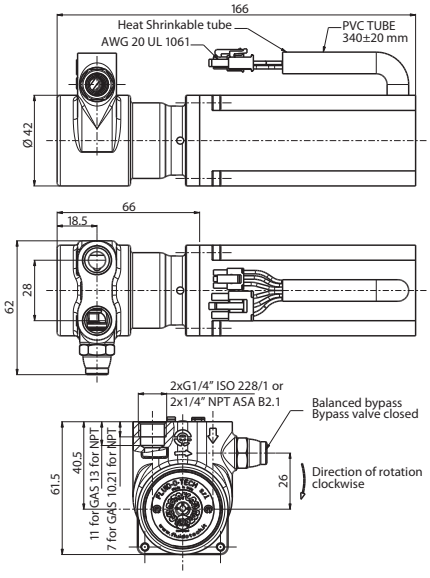

Dimensions in mm

GA0072 - 24 V D56 H102 BRUSH MOTOR (90-54-37)

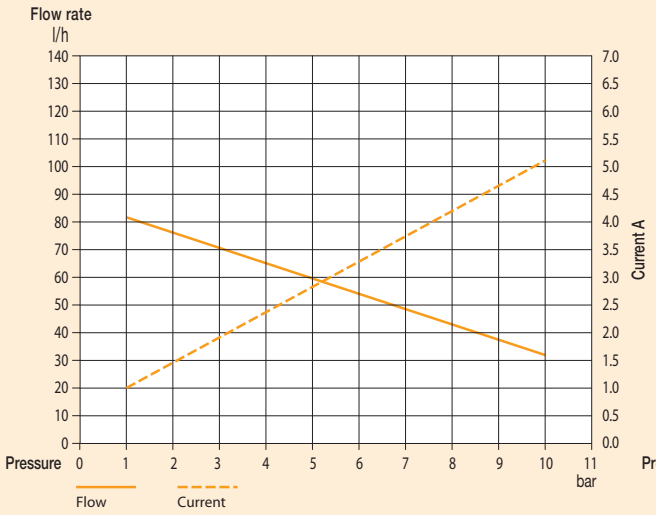

GA0102 - 24 V D56 H102 BRUSH MOTOR (90-54-37)

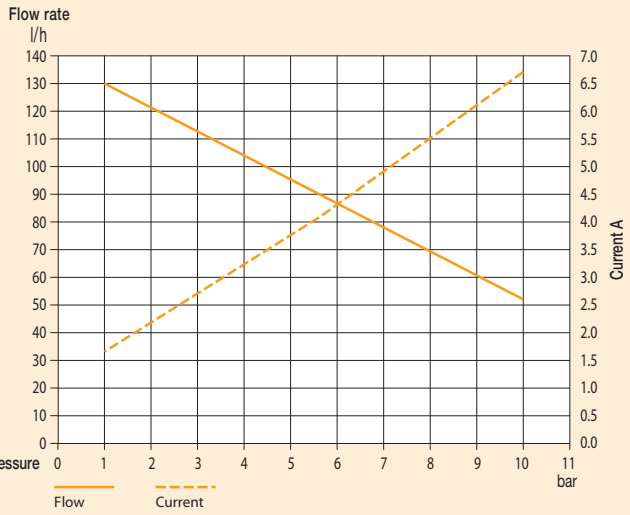

GA0072 - 24 V 42x100 mm BRUSHLESS MOTOR (90-93-02)

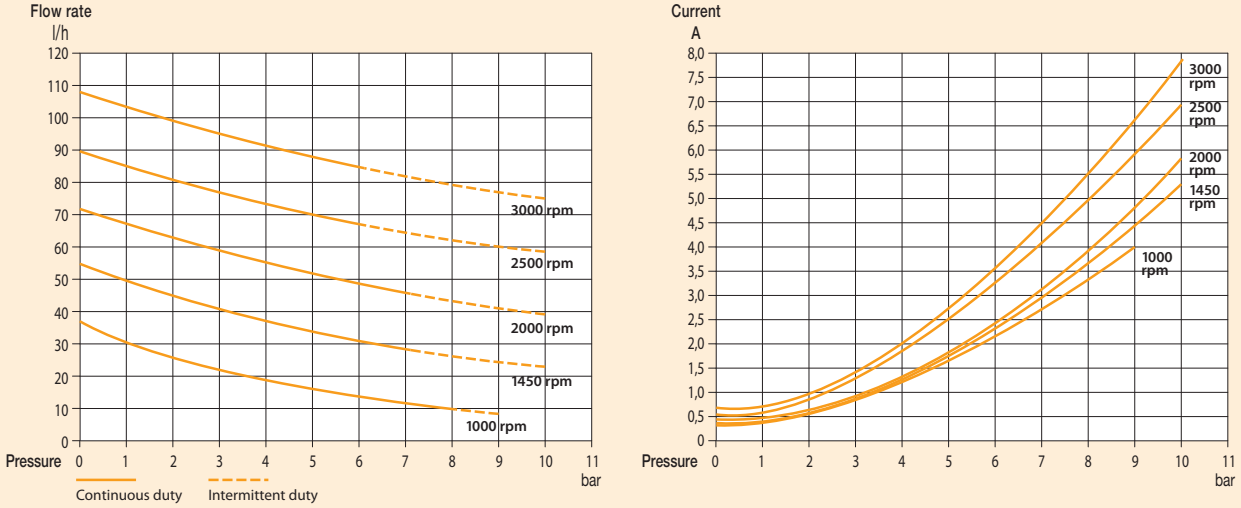

GA0102 - 24 V 42x100 mm BRUSHLESS MOTOR (90-93-02)

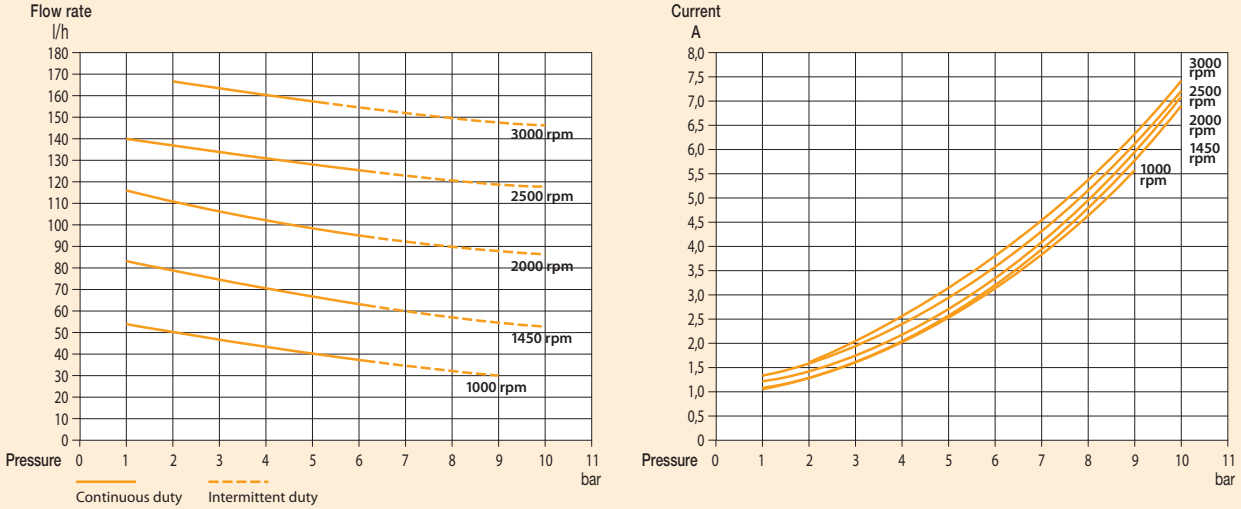

Note: Hydraulic performances measured with 20 °C (68 F) water and bypass blocked.
For applications involving other fluids, high temperatures or unusual processing conditions consult the factory or an authorized Fluid-o-Tech distributor.

Fluid-o-Tech reserves the right to alter the specifications indicated in this catalogue at any time and without prior notice.

Fluid-o-Tech srl
Via Leonardo da Vinci, 40
20094 Corsico, Milano, Italy
Tel. +39 02 9995 01
Fax +39 02 9995 0999
info@fluidotech.it

Fluid-o-Tech Int'l Inc.
161 Atwater St.,
06479 Plantsville CT (USA)
Tel. +1 (860) 276 9270
Fax +1 (860) 620 0193
info@fluid-o-tech.com

Fluid-o-Tech Int'l Inc. Japan
201, 4-3-10, Todoroki,
Setagaya, Tokyo 158-082, Japan
Tel. +81 (0) (3) 6432 1812
Fax +81 (0) (3) 6432 1813
k.kato@fluidotech.com

Fluid-o-Tech Asia (Beijing) Co., Ltd
Jingwei Industrial Zone,
Beifang Huairou, Beijing, 101400, PRC
Tel. +86 (0) (10) 6168 4650
Fax +86 (0) (10) 6168 4651
info@fluidotech-asia.com