GRI PUMPS
A GORMAN-RUPP COMPANY
The Pump People

Centrifugal Pumps



Centrifugal pumps are designed to transfer both corrosive and non-corrosive fluids at maximum hydraulic efficiencies. Centrifugal pumps are not self-priming and must be used in applications where flooded suction exists. These pumps can not be run dry.

Typical applications include commercial and residential heating and cooling systems, commercial coffee urns, ice makers, dish and glassware washers, laundry appliances, plating systems, agricultural sprayers and industrial floor scrubbers.

Features:

- Corrosion resistant
- Hydraulically efficient
- Quiet operation
- No shaft seals
- Flexible mounting and body discharge positions
- Low current draw and heat rise
- NSF certified models available

Contents

- Centrifugal Pump Specs / Options 2-3
- 100 Series.....4-5
- 120 Series.....6-7
- 149 Series.....8-9
- 200 Series.....10-11
- 3900 Series.....12-13
- Hi-Speed Series.....14-15
- Replacement Kits 16

Gorman-Rupp Industries designs and manufactures pumps and pumping solutions for the Original Equipment Manufacturer (OEM). All series/models shown can be configured to meet specific OEM application requirements. Contact GRI for design points that fall outside of shown parameters.

SERIES	MAX FLOW	MAX HEAD	MAX SYSTEM PRESSURE	MAX FLUID TEMPERATURE	MOTOR SPECS / VOLTAGES
100	9 GPM	14 FT	Phenolic	220°F (104°C)	115, 230, 50/60 Hz
120	40 GPM	50 FT	Noryl®	220°F (104°C)	115, 230, 50/60 Hz, 1/3 HP
149	31 GPM	32 FT	Phenolic	220°F (104°C)	115, 50/60 Hz, 1/5 HP
200	13 GPM	9.7 FT	Polyethylene	180°F (82°C)	115, 60 Hz
3900	60 GPM	34 FT	Phenolic	220°F (104°C)	115, 230, 50/60 Hz, 1/3 HP
Hi-Speed	1.3 GPM	36.91 FT	Polypropylene	140°F (60°C)	12 VDC

Specifications / OEM Options
Centrifugal Pumps

Centrifugal Pumps Overview

Max Flow Rates: Range to 60 gpm
Max Discharge Heads: Range to 85 Feet
Max Fluid Temperature: To allow for optimum life, pumps with lip seals are limited to 180°F (82°C) and pumps with mechanical seals permit operation to 220°F (104°C)
Motors: All motors are rated for continuous duty, thermally protected and UL recognized.

Materials in Contact with Solution: Refer to individual series page. Contact GRI regarding chemical compatibility.

OEM Options:
GRI's goal is to meet an OEM's unique requirements. Our Sales and Engineering team are structured to quickly evaluate an application and create a solution specific to the customer. Please contact GRI to discuss your pumping solution.

Body
- Aluminum
- Buna N
- Bronze
- Nitrile
- Noryl®
- Phenolic
- Stainless Steel
- 304 Stainless Steel

Impellers
- Bronze
- Buna N
- Epoxy with Stainless Steel shaft
- Noryl®
- Phenolic
- Polyethylene
- Polypropylene
- Rubber
- Stainless Steel

Two different diameter Noryl® impellers are available to provide greater performance ranges.
- Noryl® with 316 Stainless Steel
- Noryl® with Brass impeller shaft

Two different diameter Phenolic impellers are available to provide greater performance ranges.
- Phenolic with 316 Stainless Steel impeller shaft
- Phenolic with Brass impeller shaft

Seals
- Buna
- Buna N lip seal
- Carbon vs. 316 Stainless Steel with Brass, 302 Stainless Steel and Kel-F® or Butyl and EPT/EPDM elastomers
- Carbon vs. 316 Stainless Steel with Buna N, Nitrile and 302 Stainless Steel Components
- Carbon vs. 316 Stainless Steel mechanical seals with Brass, 302 Stainless Steel, and Polyethylene, Kel-F® or Butyl components

OEM Options
Centrifugal Pumps

Seals continued from previous page

- Carbon vs. 316 Stainless Steel with Kel-F®, Viton®/ Fluoroelastomer, Brass and 302 Stainless Steel components
- Carbon vs. 316 Stainless Steel with Polyethylene, Brass and 302 Stainless Steel components
- Carbon vs. 316 Stainless Steel with Silicone, Brass and 302 Stainless Steel components
- EPT/EPDM
- Viton®/Fluoroelastomer

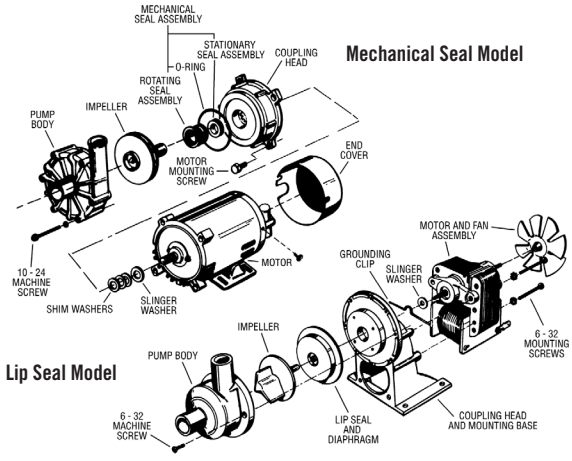

O-Rings (Elastomers)

- Flurosilicone (14110 & 14518/20 Series only)
- Hypalon®
- Kel-F®
- Nitrile
- Neoprene
- Silicone
- Viton®/Fluoroelastomer

Motors

- 12VDC
- 24VDC
- 36VDC
- 115V, 50/60 Hz
- 115V, 60 Hz
- 115VDC
- 220/240V, 50 Hz
- 230V, 50 Hz
- 230V, 50/60 Hz
- 230V, 60 Hz
- 30VDC
- Pedestal models (no motor)

100 Series
Centrifugal Pumps

Specifications	
Max Flow:	9 gpm
Max Head:	11 ft
Max Fluid Temp.	220°F (104°C)
Materials in contact with solution / OEM options	
Body	Phenolic Suction I.D. - 1½" Discharge I.D. - 1½"
Impeller	Phenolic
Seal	Carbon and Ceramic faces with Nitrile elastomers. Mechanical type seal.
Motor specifications / OEM options	
Motor Specs	• 115V, 50/60 hz • 230V, 50/60 hz • Open • Shaded pole • Thermally protected • Ball bearing

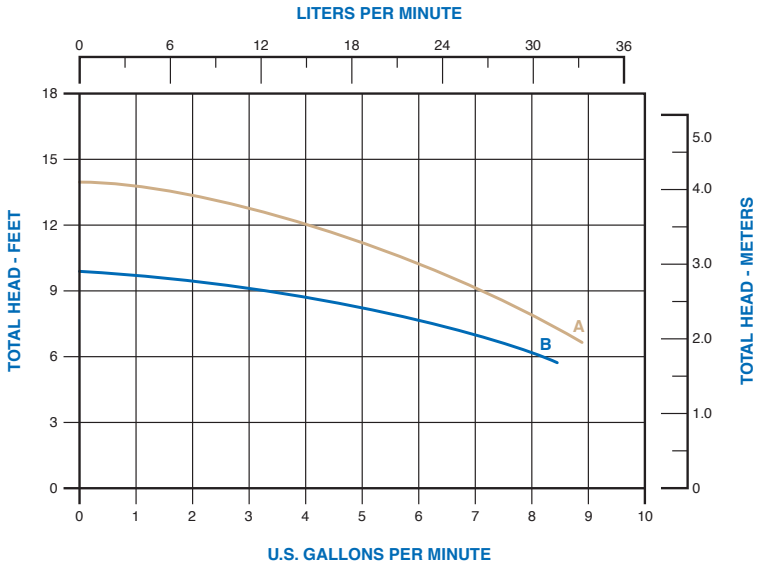

A - 60 Hz curve. **B** - 50 Hz curve.

Do Not Run Pumps Dry. Pumps must be in a continuous flooded suction environment.

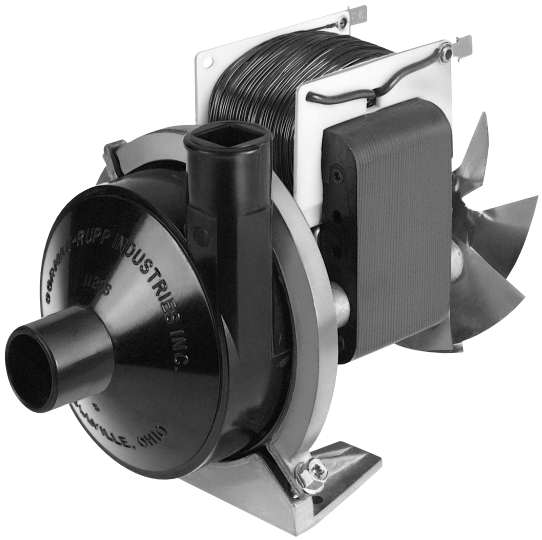

Model Number	Seal	Volts	Hz	Amps	Motor Type	Shell	Typical Curve	
							50 Hz	60 Hz
15332-006	Mechanical	115	50/60 Hz	2.4/1.8	Shaded Pole	Open	B	A
15332-008	Mechanical	230	50/60 Hz	1.2/.9	Shaded Pole	Open	B	A

180 Hines Ave. • Bellville, OH 44813 • PH: 419-886-3001 • FAX: 419-886-2338 • www.GRIpumps.com

Typical Dimensions

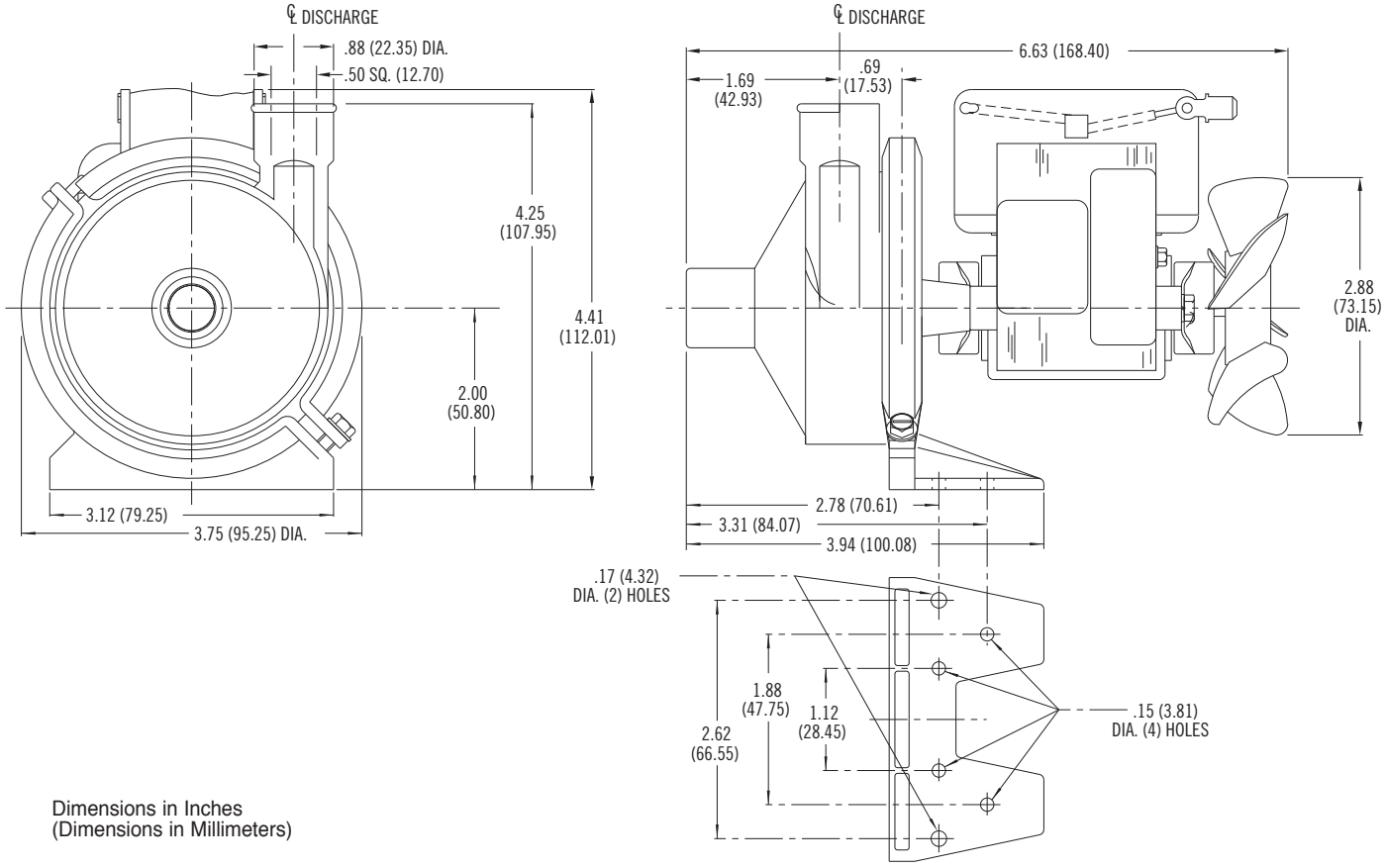

Dimensions in Inches
(Dimensions in Millimeters)

120 Series
Centrifugal Pumps

Specifications	
Max Flow:	40 gpm
Max Head:	50 ft
Max Fluid Temp.	220°F (104°C)
Materials in contact with solution / OEM options	
Body	Noryl® Suction I.D. 15/16” Discharge I.D. 13/16”
Impeller	Noryl®
Seal	Carbon and Ceramic faces with Neoprene® and Nitrile elastomers
Motor specifications / OEM options	
Motor Specs	• 115/230V, 50/60 Hz, 1⁄3 hp • Open • Drip-proof • Capacitor start • Continuous duty rated • Thermally protected

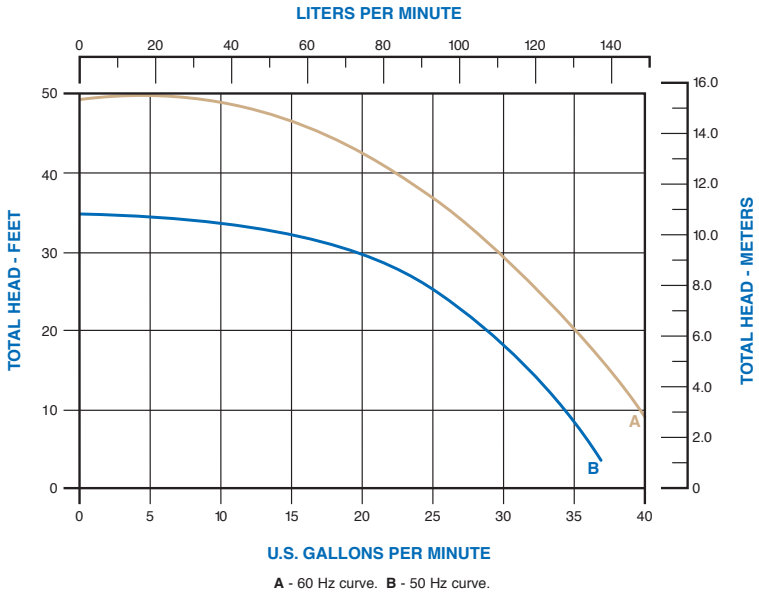

A - 60 Hz curve. **B** - 50 Hz curve.

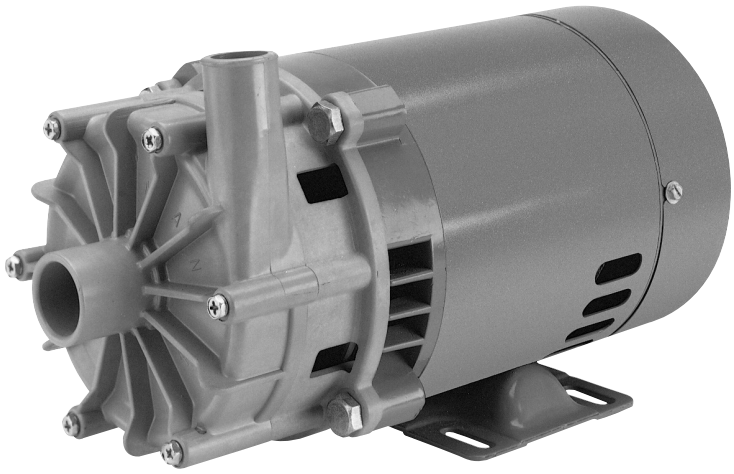

Do Not Run Pumps Dry. Pumps must be in a continuous flooded suction environment.

Model Number	Seal	Volts	Hz	Amps	Motor Type	Shell	Typical Curve	
							50 Hz	60 Hz
12895-002	Mechanical	115/230	50/60	6.8/3.4	Cap. Start	Open D.P.	B	A

180 Hines Ave. • Bellville, OH 44813 • PH: 419-886-3001 • FAX: 419-886-2338 • www.GRIpumps.com

Typical Dimensions

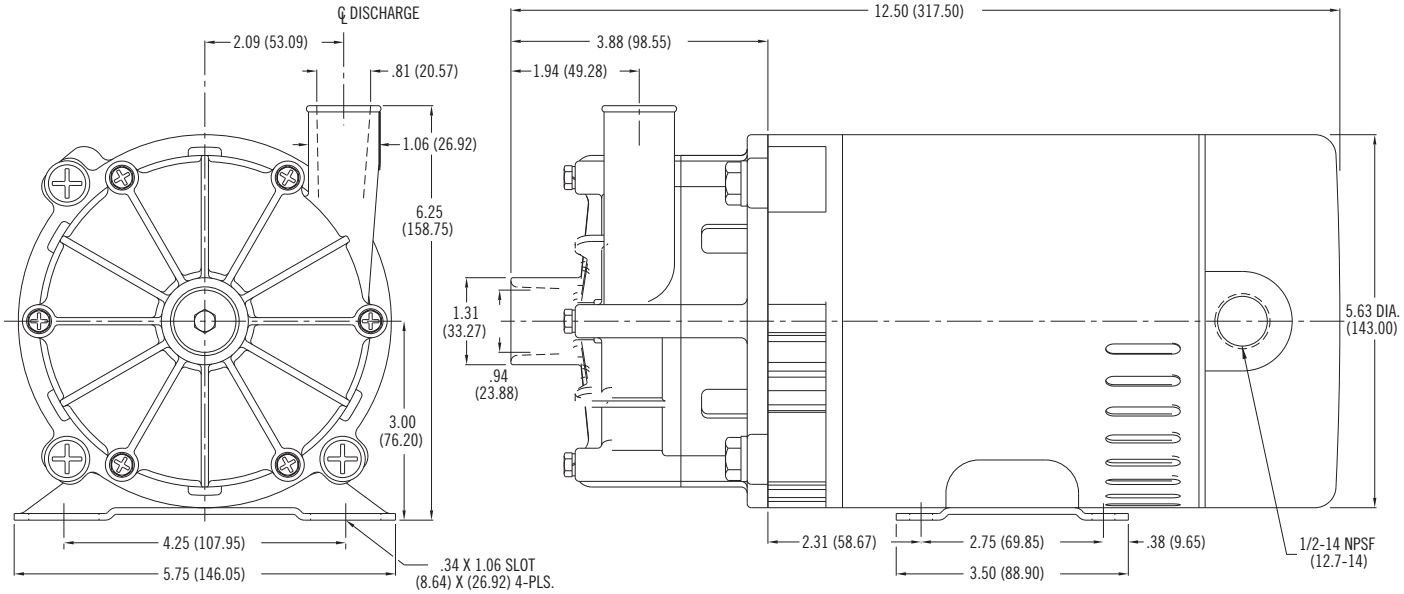

Dimensions in Inches
(Dimensions in Millimeters)

GRI PUMPS
A GORMAN-RUPP COMPANY
The Pump People

149 Series
Centrifugal Pumps

Specifications	
Max Flow:	31 gpm
Max Head:	32 ft
Max Fluid Temp.	220°F (104°C)
Materials in contact with solution / OEM options	
Body	Phenolic
Impeller	Noryl®
Seal	Carbon and Ceramic faces with EPT/EPDM elastomers and 304 Stainless Steel and 18-8 Stainless Steel springs
Motor specifications / OEM options	
Motor Specs	• 115V, 50/60 Hz; • Thermally protected • PSC • Ventilated

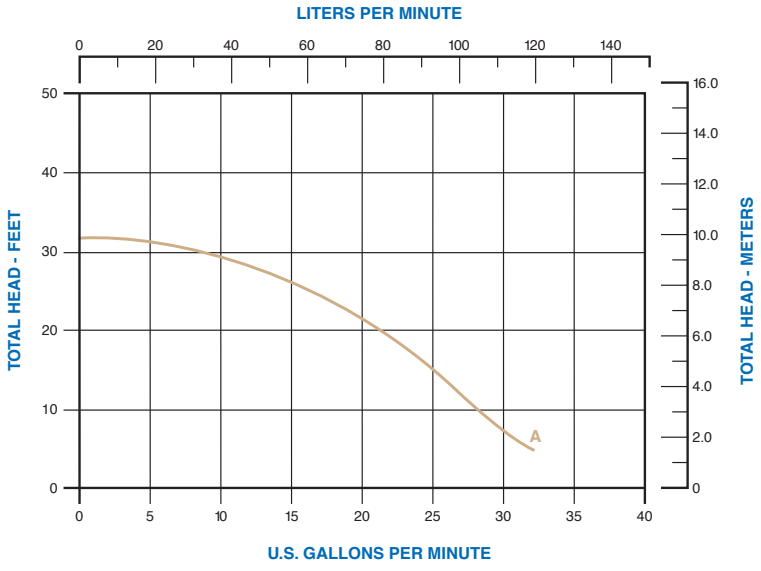

A - 60 Hz curve.

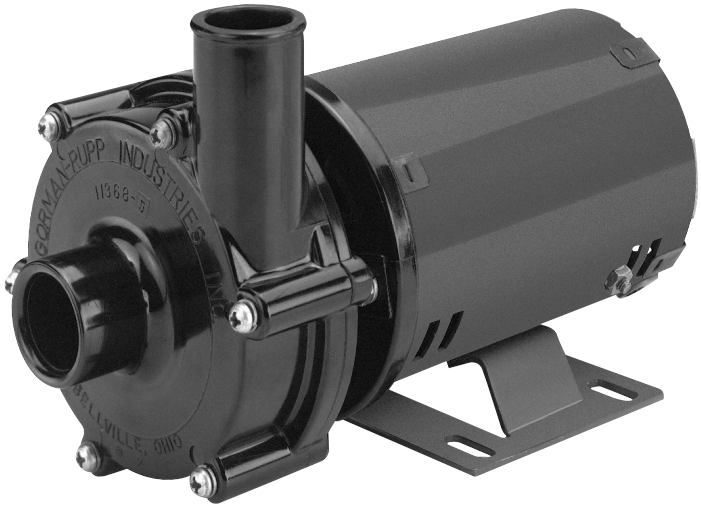

Do Not Run Pumps Dry. Pumps must be in a continuous flooded suction environment.

Model Number	Seal	Volts	Hz	Amps	Motor Type	Shell	Typical Curve	
							50 Hz	60 Hz
16082-001	Mechanical	115	60	2.1	PSC	Vent	–	A

Typical Dimensions

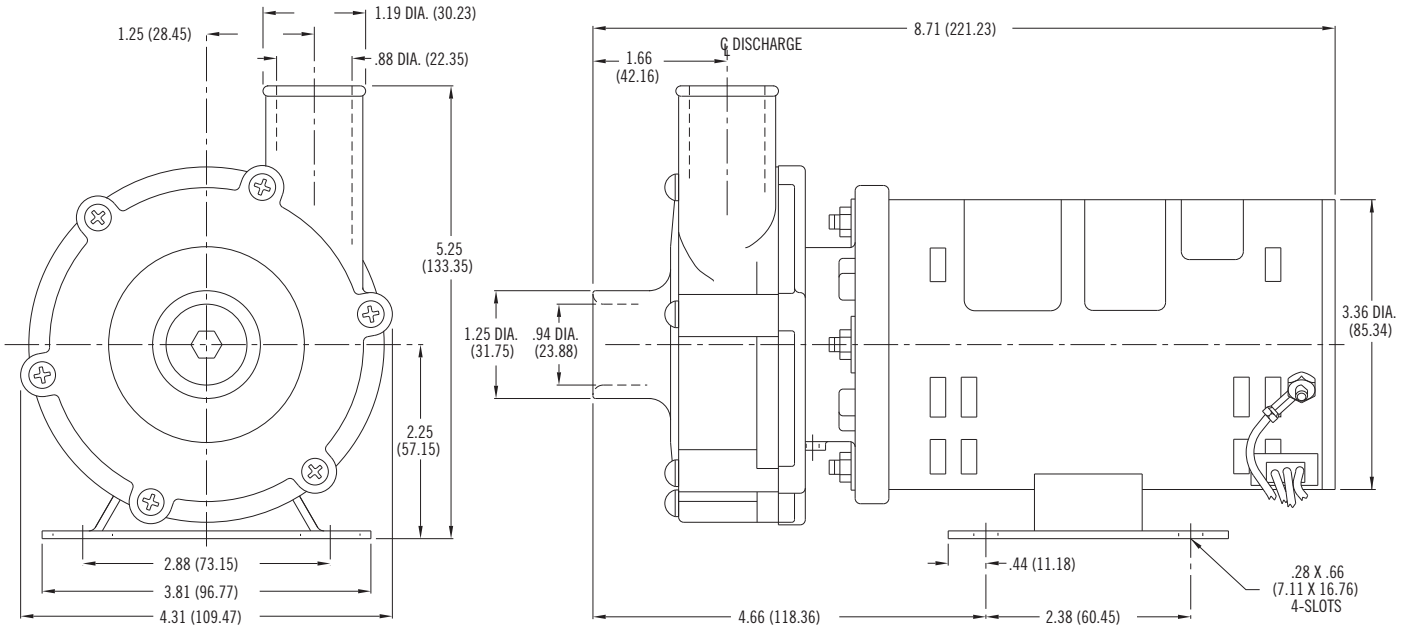

Dimensions in Inches
(Dimensions in Millimeters)

200 Series
Centrifugal Pumps

Specifications	
Max Flow:	13 gpm
Max Head:	9.7 ft
Max Fluid Temp.	180°F (82°C)
Materials in contact with solution / OEM options	
Body	Polyethylene
Impeller	Polyethylene
Seal	Nitrile lip seal
Motor specifications / OEM options	
Motor Specs	• 115V, 60 hz • Open • Shaded pole

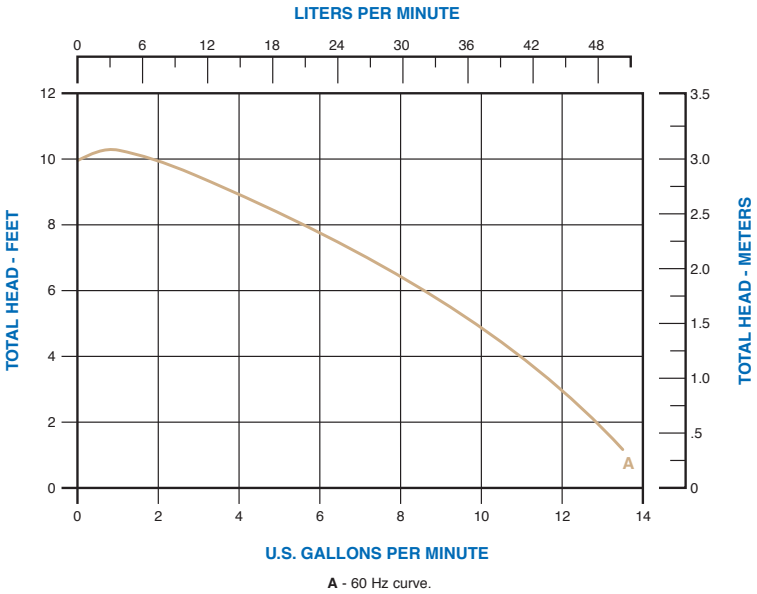

A - 60 Hz curve.

Do Not Run Pumps Dry. Pumps must be in a continuous flooded suction environment.

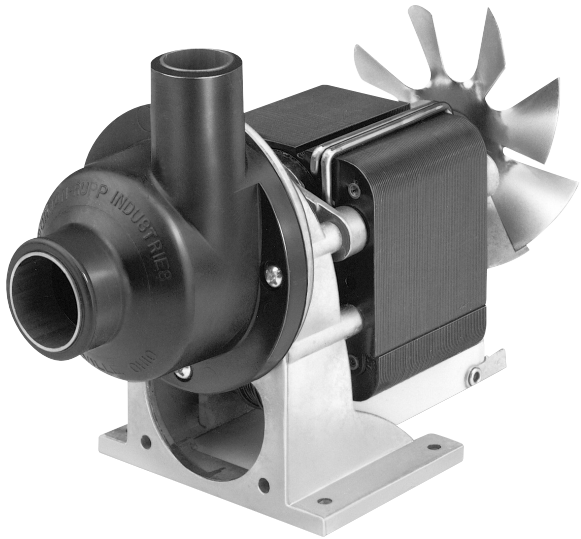

Model Number	Seal	Volts	Hz	Amps	Motor Type	Shell	Typical Curve	
							50 Hz	60 Hz
15901-001	Lip	115	60	2.4	Shaded Pole	Open	–	A
15952-001	Same as 15901-001 except with 6' cord and cover.							

180 Hines Ave. • Bellville, OH 44813 • PH: 419-886-3001 • FAX: 419-886-2338 • www.GRIpumps.com

Typical Dimensions

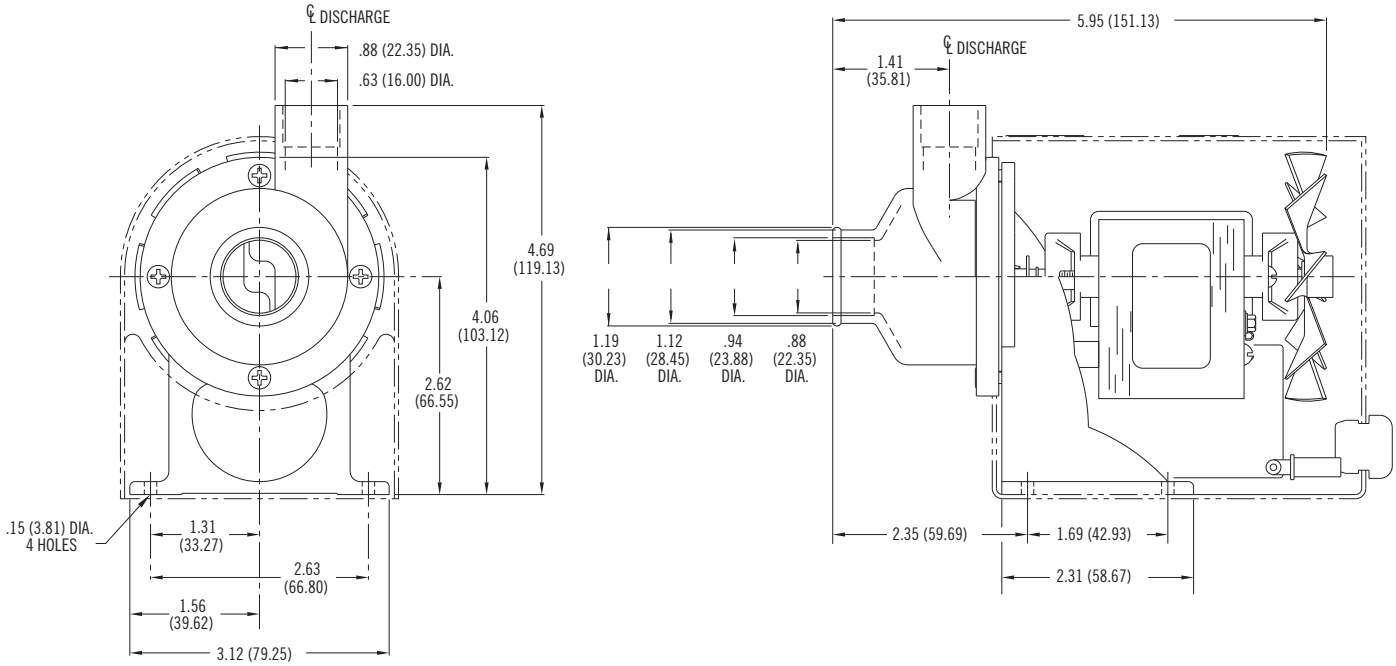

Dimensions in Inches
(Dimensions in Millimeters)

3900 Series
Centrifugal Pumps

Specifications	
Max Flow:	60 gpm
Max Head:	34 ft
Max Fluid Temp.	220°F (104°C)
Materials in contact with solution / OEM options	
Body	Phenolic
Impeller	Phenolic
Seal	Carbon and Ceramic faces with 302 Stainless Steel and EPT/EPDM elastomers
Motor specifications / OEM options	
Motor Specs	• 115/230V, 50/60 Hz 1⁄3 hp • Open • Drip-proof, • Capacitor start

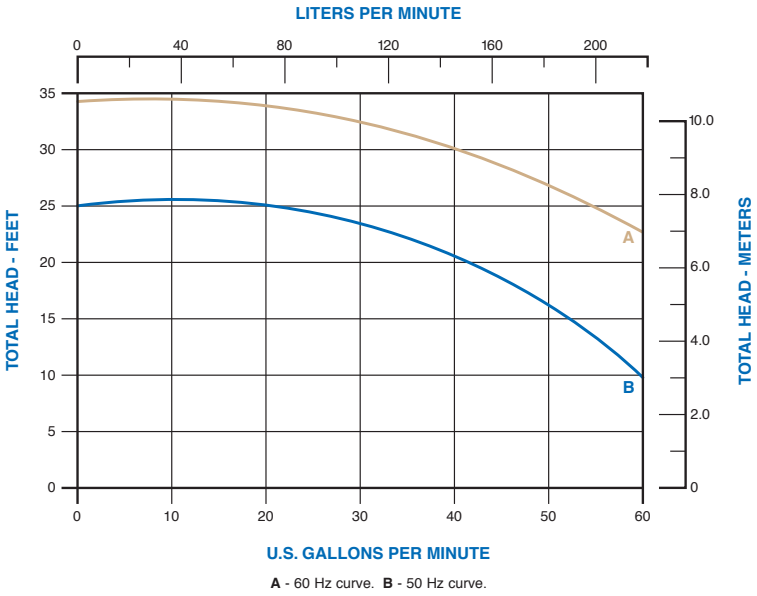

A - 60 Hz curve. **B** - 50 Hz curve.

Do Not Run Pumps Dry. Pumps must be in a continuous flooded suction environment.



Model Number	Seal	Volts	Hz	Amps	Motor Type	Shell	Typical Curve	
							50 Hz	60 Hz
11908-009	Mechanical	115/230	60	7.6/3.8	Cap Start	Open D.P.	B	A
		115/230	50	8.2/4.1				

180 Hines Ave. • Bellville, OH 44813 • PH: 419-886-3001 • FAX: 419-886-2338 • www.GRIpumps.com

Typical Dimensions

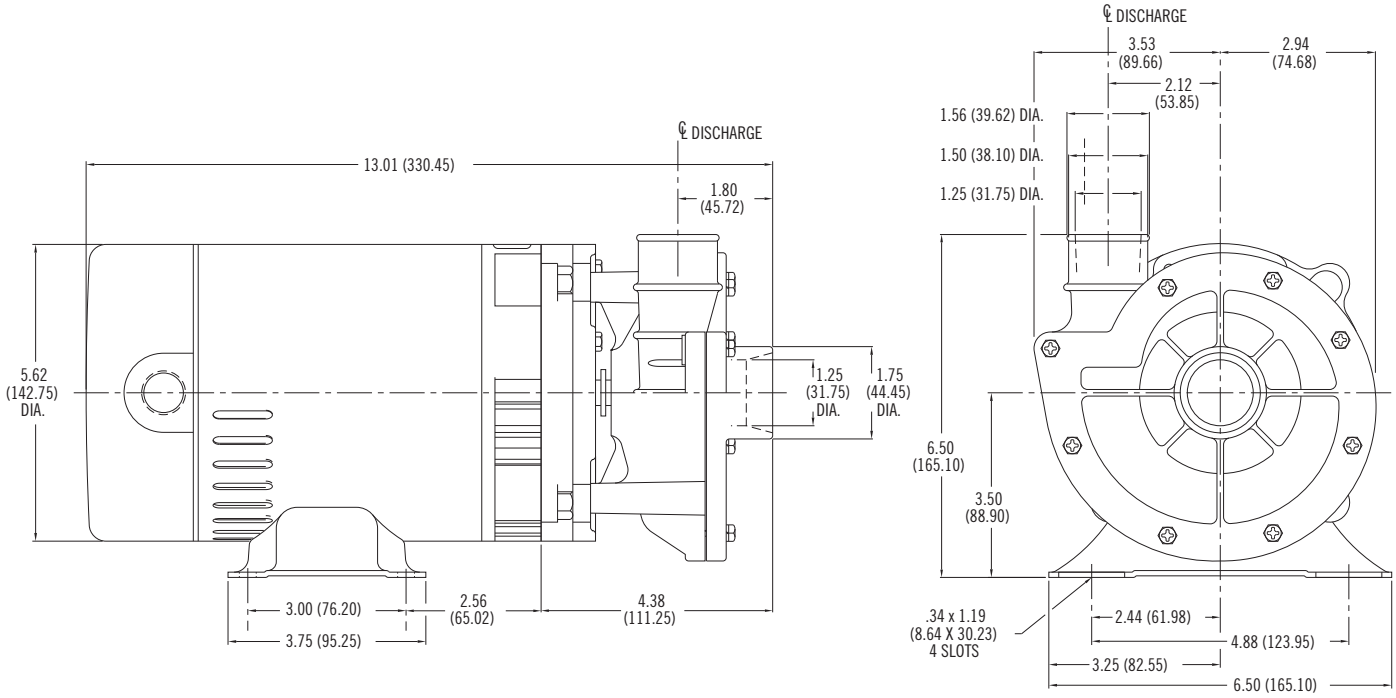

Dimensions in Inches
(Dimensions in Millimeters)

Hi-Speed Series
Centrifugal Pumps

Specifications	
Max Flow:	1.3 gpm
Max Head:	16 psi
Max Fluid Temp.	180°F (82°C)
Materials in contact with solution / OEM options	
Body	Polypropylene
Impeller	Polypropylene
Seal	Nitrile lip seal
Motor specifications / OEM options	
Motor Specs	• 12 VDC

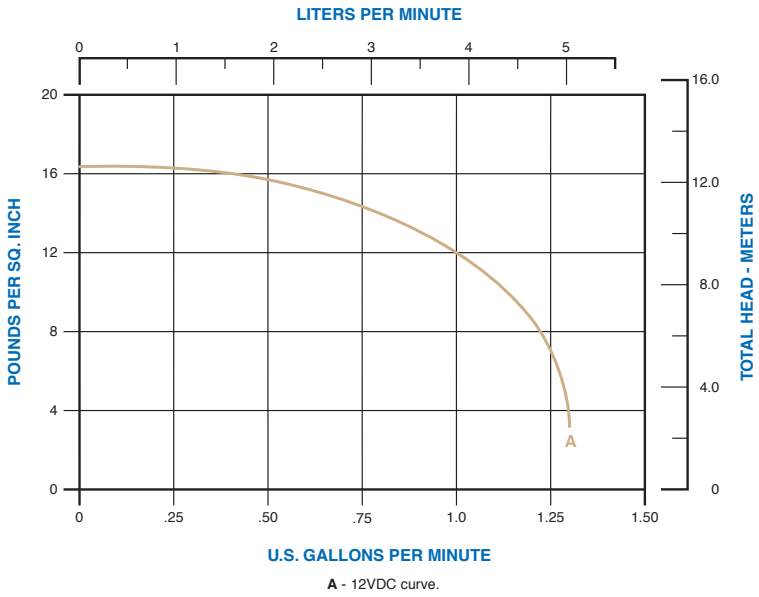

A - 12VDC curve.

Do Not Run Pumps Dry. Pumps must be in a continuous flooded suction environment.

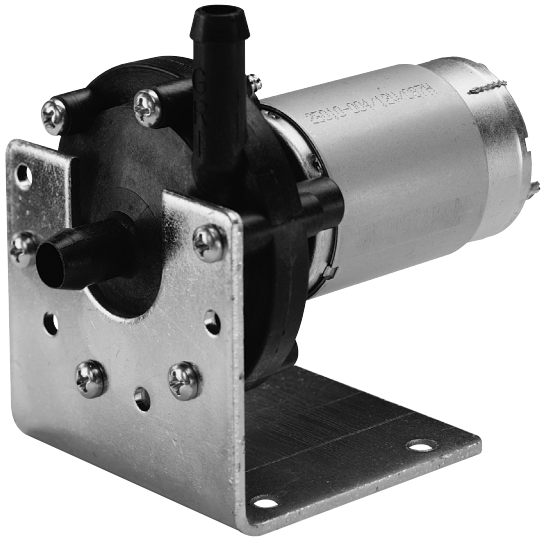

Model Number	Seal	Volts	Amps	Motor Type	Shell	Typical Curve 12 VDC
25501-006	Lip	12 VDC	2.6	Brush	Non-Vent	A

180 Hines Ave. • Bellville, OH 44813 • PH: 419-886-3001 • FAX: 419-886-2338 • www.GRIpumps.com

Typical Dimensions

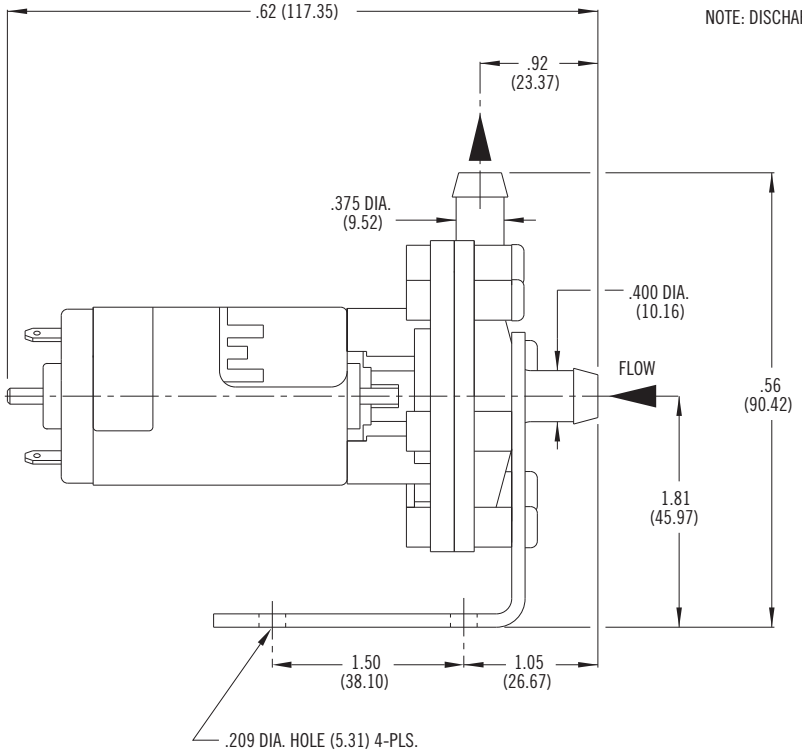

NOTE: DISCHARGE PORT OF PUMP MAY BE ROTATED AS SHOWN

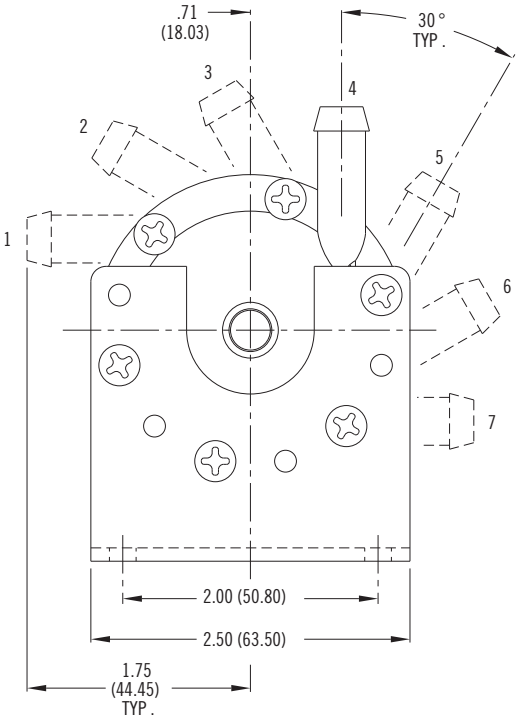

Dimensions in Inches
(Dimensions in Millimeters)

Replacement Kits
Centrifugal Pumps

Impeller & Seal Kits

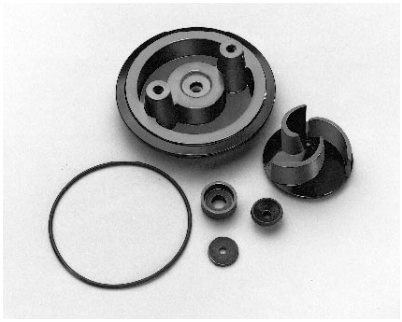

Impeller and seal kits include impeller, seal assembly and O-ring.

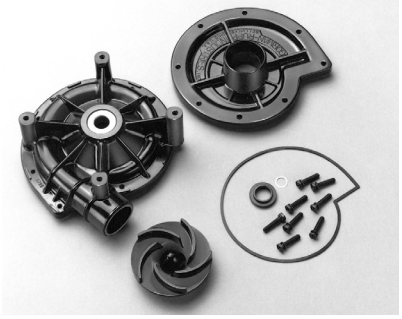

Impeller and seal kit includes impeller, seal assembly, gasket, volute, suction plate and screws.

Body Kits



Body kits include body, gasket or O-ring and screws or mounting ring if required.

Model Number	Impeller & Seal Kit	Body Kit
08107-002	02500-056	02500-900
11908-009	02500-413	—
12895-002	02500-936	02500-923
12895-003	02500-936	02500-923
15332-006	02500-218	02500-897
15332-008	02500-218	02500-897
15901-001	02500-075	02500-905
15902-001	02500-626	02500-917
15903-001	02501-182	02501-132
15951-001	02500-626	02500-917
15952-001	02500-075	02500-905
16082-001	02501-245	02501-244
16094-001	02501-245	02501-244
16675-001	02501-182	02501-132