GRI PUMPS
A GORMAN-RUPP COMPANY
The Pump People

Magnetic Drive Pumps



Operation is similar to standard centrifugal pumps, except the impeller is driven with a magnetic coupling, eliminating the need for a shaft seal. Magnetic drive pumps must be used where flooded suction exists.

Typical applications include film processors; laser and x-ray cooling systems; medical, scientific and laboratory equipment and silver recovery equipment.

Features:

- Corrosion resistant
- Hydraulically efficient
- Quiet operation
- No shaft seals
- Flexible mounting and body discharge positions
- Low current draw and heat rise
- NSF certified models available

Contents

- Magnetic Drive Pump Overview 2
- OEM Options 3
- Series Comparison Chart 3
- 14110 Series 4-5
- 14520 Series 6-7
- 15651 Series 8-10
- 17650 Series 11-12
- Replacement Kits 14-15

Gorman-Rupp Industries designs and manufactures pumps and pumping solutions for the Original Equipment Manufacturer (OEM). All series/models shown can be configured to meet specific OEM application requirements. Contact GRI for design points that fall outside of shown parameters.

SERIES	MAX FLOW	MAX HEAD	MAX SYSTEM PRESSURE	MAX FLUID TEMPERATURE	MOTOR SPECS / VOLTAGES
14110	11 GPM	16 FT	25 PSI	180°F (82°C)	• 115, 50/60 Hz
14520	26 GPM	35 FT	75 PSI	203°F (95°C)	• 115, 230, 50/60 Hz
15651	3.75 GPM	13 FT	75 PSI	203°F (95°C)	• 115, 230, 50/60 Hz • 12, 24 DC Brushless
17650	9 GPM	50 FT	75 PSI	160°F (71°C)	• 115, 230, 50/60 Hz • 12, 24 DC Brushless

Magnetic Drive Pumps

Magnetic Drive Pumps Overview

Magnetic drive centrifugal pump operation is similar to a standard centrifugal pump except the motor shaft seal is eliminated. Magnetic drive pumps are designed to isolate the pump body from the motor by driving an impeller and magnet assembly with a drive magnet attached to the motor shaft. Motor torque is transmitted by a drive magnet through a plastic housing to the impeller assembly. The plastic housing separates the motor drive magnet from the fluid being pumped. Leaks caused by shaft seal failure are eliminated. The end result is a more efficient seal-less centrifugal pump that will not leak and is capable of achieving up to 50 thousand hours of continuous duty operation.

To handle the most aggressive chemicals, GRI's material of construction consists of special combinations of chemically inert plastic. The impeller shaft and bearing system handle the inherent friction and motor heat with built-in cooling passages that are designed to use the pumped liquid as a lubricating coolant. GRI uses ceramic shafts with either Teflon® or ceramic thrust bearings as standard materials for each magnetic drive pump line. These robust features add tremendously to the chemical compatibility and overall life of the pump to make it virtually maintenance free.

Impellers and pump bodies are designed to produce efficient flow and head characteristics required in today's applications. The hydraulic designs, coupled with motors specifically designed for the pump end, means less power consumption for the work performed.

Typical OEM applications include film processors, laser and x-ray cooling systems, medical, scientific, laboratory and silver recovery equipment. Magnetic drive centrifugal pumps must be used where flooded suction conditions exist.

Pump Specifications:
Flow Rates: Range to 35 gpm (132 lpm)
Max. Discharge Head: Range to 53 feet (16 m)
Max. Fluid Temperature: Up to 250°F (121°C)
Motors: All motors, except the 15651 series and 18650 series motors which use sleeve bearings, have sealed electric motor grade ball bearings, are thermally protected, class B insulated, and continuous duty rated. Most pumps available with AC or DC motors.

Please contact GRI for questions regarding chemical compatibility.

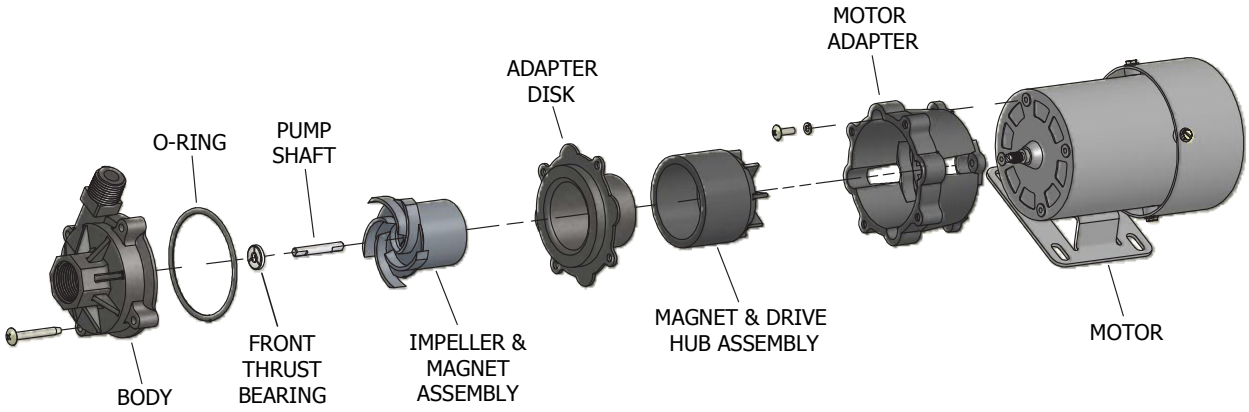

180 Hines Ave. • Bellville, OH 44813 • PH: 419-886-3001 • FAX: 419-886-2338 • www.GRIpumps.com

OEM Options
Magnetic Drive Pumps

OEM Options:
GRI specializes in the custom design and manufacturing of fluid pumps for the OEM market. Please contact us to discuss your project's needs and specifications.

Body
- NSF certified models available
- Multiple suctions and discharge port configurations available.

O-Rings *(Elastomers)*
- Flurosilicone (14110 & 14518/20 Series only)
- Kel-F®
- Nitrile
- Neoprene
- Silicone
- Viton®/Fluoroelastomer

Motors
- 115V, 50/60 Hz
- 115V/230V, 50/60 Hz Capacitor start, drip-proof, ball bearing, thermally protected
- 115V, 50/60Hz; 230, 50/60 Hz Explosion-proof (14520 Series only)
- 115V, 50/60 Hz; 230V, 50/60 Hz Open, shaded pole
- 115V, 50/60Hz; 230V, 50/60 Hz Open, shaded pole, impedance protected, ball bearing
- 230V, 50/60 Hz
- 12, 24 Brushless DC (BLDC)
- Drip-proof, shaded pole, thermally protected
- TEFC/PSC, thermally protected

Compliances
- **RoHS 2** (2011/65/EC)
- **REACH** (SVHC)

Agency Approvals *(contact GRI)*

GRI PUMPS
A GORMAN-RUPP COMPANY
The Pump People

14110 Series
Magnetic Drive Pumps

Specifications	
Max Flow:	11 gpm
Max Head:	16 ft
Max System Pressure:	25 psi
Max Fluid Temp.	180°F (82°C)
Materials in contact with solution / OEM options	
Body	Ryton®
Impeller	Ryton® with Epoxy adhesive
Adaptor	Ryton®
Pump Shaft	Ceramic
Impeller Bearings	Resin Impregnated Carbon
Front Thrust Bearings	Glass-Filled Teflon®
Rear Thrust Bearings	Ceramic
O-Rings (Elastomers)	• EPT/EPDM • Viton®/Fluoroelastomer • Nitrile • Neoprene • Silicone • Kel-F®
Motor specifications / OEM options	
Motor Specs	• 115V, 50/60 hz • Vented • Shaded pole • Thermally protected • Tefc/psa
Features	
Corrosion Resistant	Quiet operation
Hydraulically efficient	Flexible mounting and body discharge positions
No shaft seals	NSF certified models available
Low current draw and heat rise	

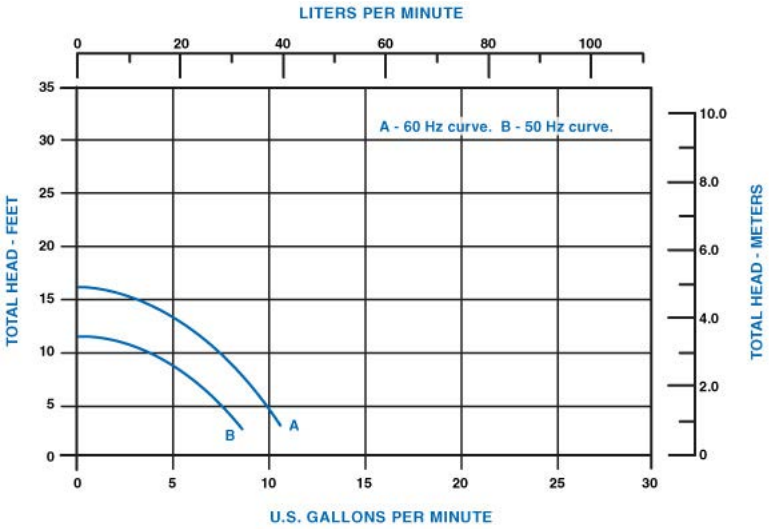



Do Not Run Pumps Dry. Pumps must be in a continuous flooded suction environment.

180 Hines Ave. • Bellville, OH 44813 • PH: 419-886-3001 • FAX: 419-886-2338 • www.GRIpumps.com

14110 Series
Magnetic Drive Pumps

GRI designs and manufactures pumps and pumping solutions for the Original Equipment Market (OEM). All models shown can be configured to meet specific OEM application requirements. Contact GRI for design points that fall outside of shown parameters.

Model Number	Voltage (Type)	Amps	Body Material	O-Ring Material	Connections Inlet/Outlet (inches)	Curve (50Hz/60Hz)
14110-050	115	2.0 / 1.6	Ryton®	EPT/EPDM	3/4 MPT / 1/2 MPT	B / A
14110-051	115	2.0 / 1.6	Ryton®	Viton®/FKM	3/4 MPT / 1/2 MPT	B / A

Performance at 50 Hz will be approximately 83% of the performance at 60 Hz.
FKM = Fluoroelastomer, FPT = Female Pipe Thread, MPT = Male Pipe Thread, MHB = Male Hose Barb.

Typical Dimensions

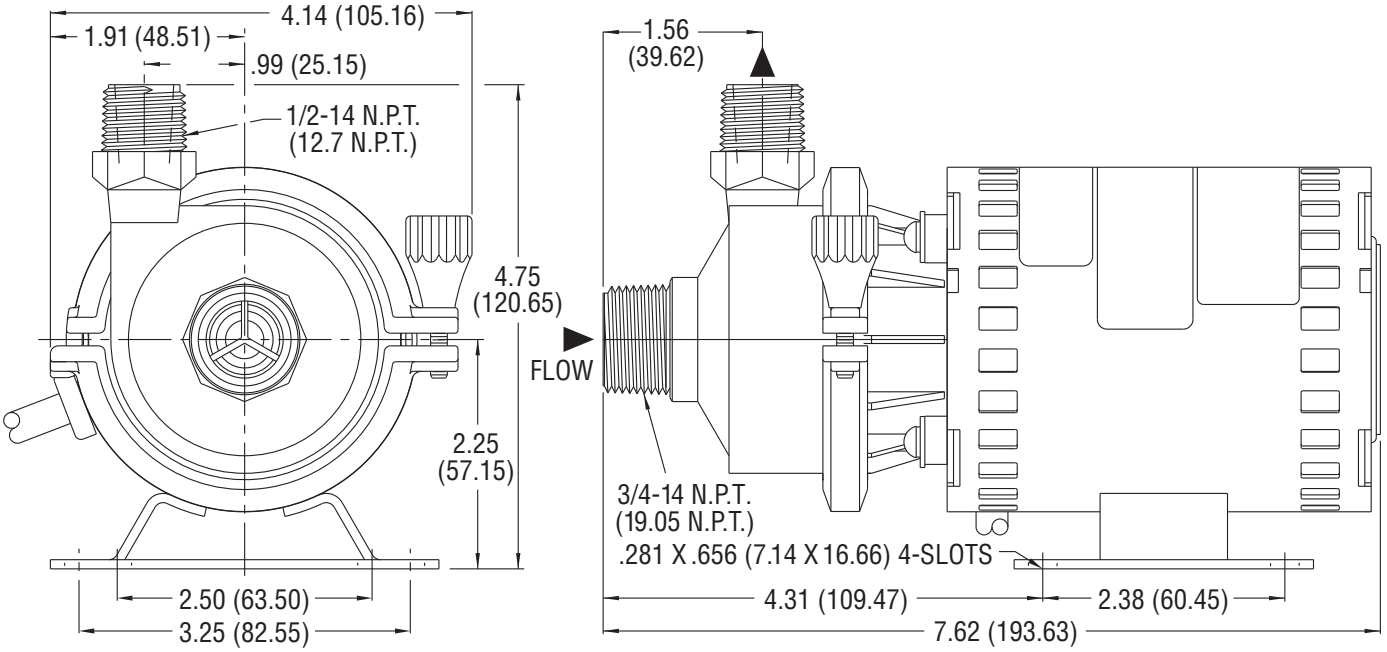

Dimensions in Inches
(Dimensions in Millimeters)

14520 Series
Magnetic Drive Pumps

Specifications	
Max Flow	26 gpm
Max Head	35 ft
Max System Pressure	75 psi
Max Fluid Temp.	203°F (95°C)
Materials in contact with solution / OEM options	
Body	Ryton®
Impeller	Ryton® with Epoxy adhesive
Adaptor	Ryton®
Pump Shaft	Ceramic
Impeller Bearings	Resin Impregnated Carbon
Front Thrust Bearings	Glass-Filled Teflon®
Rear Thrust Bearings	Ceramic
O-Rings (Elastomers)	• EPT/EPDM • Viton®/Fluoroelastomer • Nitrile • Neoprene • Silicone • Kel-F®

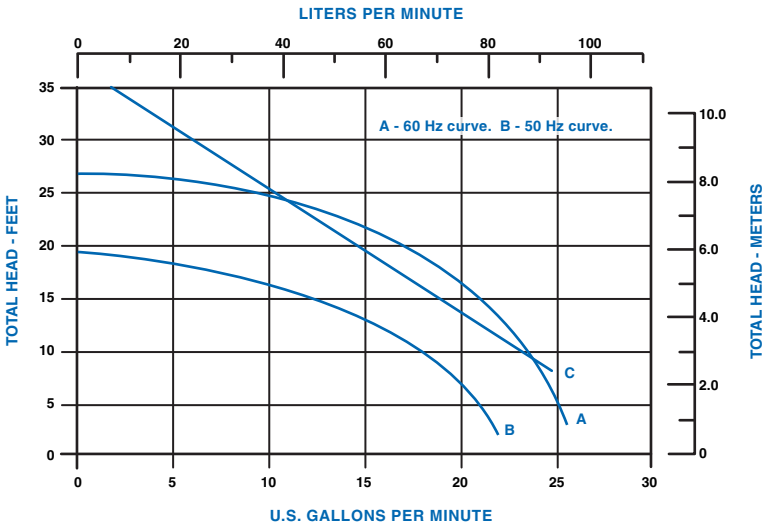

Motor specifications / OEM options	
Motor Specs	• 115V, 50/60 hz • 230V, 50/60 hz • Vented • Shaded pole
Features	
Corrosion Resistant	Quiet operation
Hydraulically efficient	Flexible mounting and body discharge positions
No shaft seals	NSF certified models available
Low current draw and heat rise	

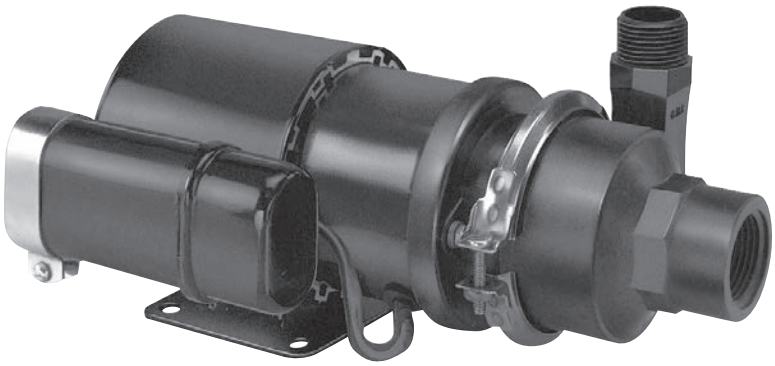

Do Not Run Pumps Dry. Pumps must be in a continuous flooded suction environment.

180 Hines Ave. • Bellville, OH 44813 • PH: 419-886-3001 • FAX: 419-886-2338 • www.GRIpumps.com

14520 Series
Magnetic Drive Pumps

GRI designs and manufactures pumps and pumping solutions for the Original Equipment Market (OEM). All models shown can be configured to meet specific OEM application requirements. Contact GRI for design points that fall outside of shown parameters.

Model Number	Voltage (Type)	Amps	Body Material	O-Ring Material	Connections Inlet/Outlet (inches)	Curve (50Hz/60Hz)
14520-050	115V AC (TEFC)	2.4 / 2.0	Ryton®	EPT/EPDM	1 FPT x 3/4 MPT	B / A
14520-051	115V AC (TEFC)	2.4 / 2.0	Ryton®	Viton®/FKM	1 FPT x 3/4 MPT	B / A
14520-052	230V AC (TEFC)	1.06	Ryton®	EPT/EPDM	1 FPT x 3/4 MPT	B / A
14520-053	230V AC (TEFC)	1.06	Ryton®	Viton®/FKM	1 FPT x 3/4 MPT	B / A
14520-054	24V BLDC (TENV)	8.3	Ryton®	EPT/EPDM	1 FPT x 3/4 MPT	C
14520-055	24V BLDC (TENV)	8.3	Ryton®	Viton®/FKM	1 FPT x 3/4 MPT	C

Vectra® is chemically resistant to most acids, oxidants and bleaches, and organic solvents. (Do not use with chemicals which are bases.)
BLDC = Brushless DC.
HS = High Speed.
Performance at 50 Hz will be approximately 83% of the performance at 60 Hz.
FKM = Fluoroelastomer, FPT = Female Pipe Thread, MPT = Male Pipe Thread, MHB = Male Hose Barb.

Typical Dimensions

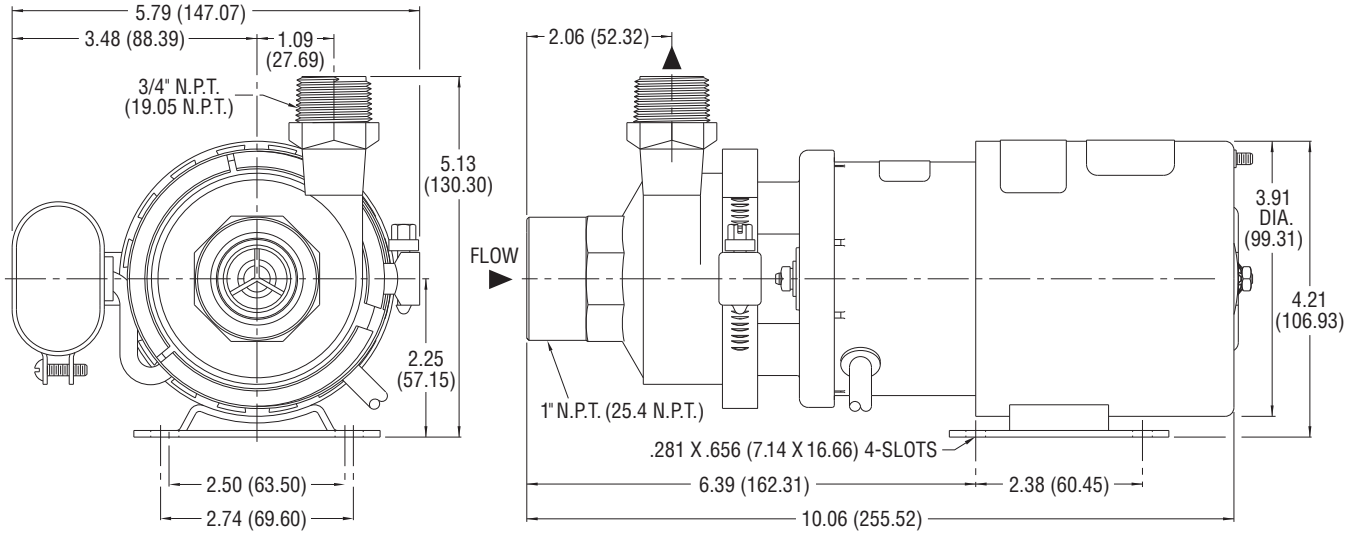

Dimensions in Inches
(Dimensions in Millimeters)

180 Hines Ave. • Bellville, OH 44813 • PH: 419-886-3001 • FAX: 419-886-2338 • www.GRIpumps.com

GRI PUMPS
A GORMAN-RUPP COMPANY
The Pump People

15651 Series
Magnetic Drive Pumps

Specifications	
Max Flow	3.75 gpm
Max Head	13 ft
Max System Pressure	75 psi
Max Fluid Temp.	203°F (95°C)
Materials in contact with solution / OEM options	
Body	Vectra®, Noryl®
Impeller	Vectra®
Bearings	Vectra®
Pump Shaft	Ceramic
Thrust Bearings	Glass-Filled Teflon®
O-Rings (Elastomers)	• EPT/EPDM • Viton®/Fluoroelastomer • Nitrile • Neoprene • Silicone • Kel-F®
Motor specifications / OEM options	
Motor Specs	• 115V, 50/60 Hz • 230V, 50/60 Hz • 12 & 24V BLDC • Open • Shaded Pole • Impedance Protected • Sleeve Bearing
Features	
Corrosion Resistant	Quiet operation
Hydraulically efficient	Flexible mounting and body discharge positions
No shaft seals	NSF certified models available
Low current draw and heat rise	

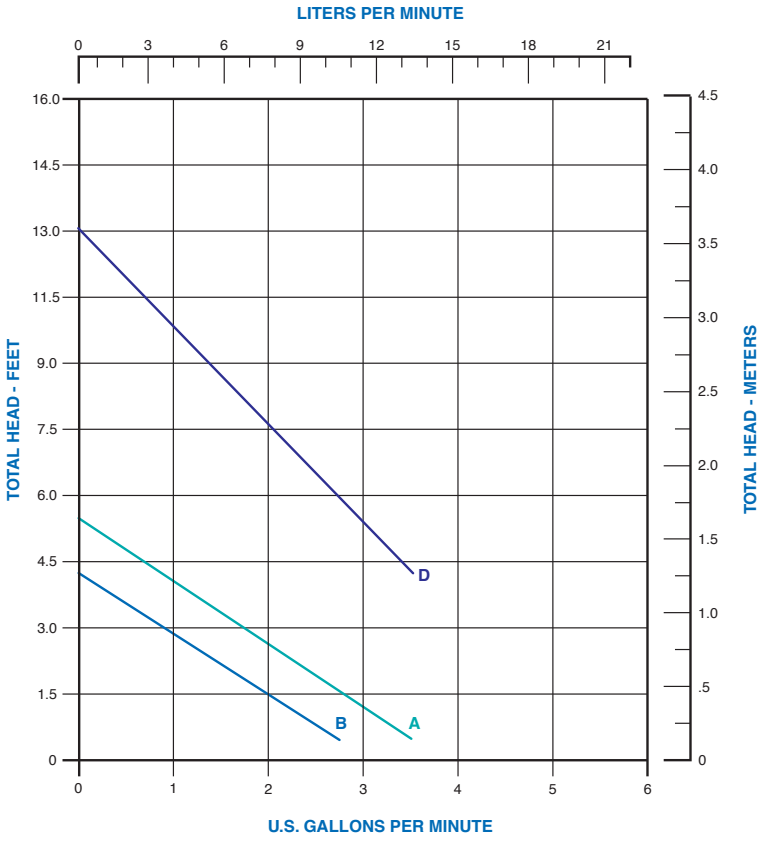

A - 60 Hz curve. **B** - 50 Hz curve. **D** - 12V BLDC curve.



Do Not Run Pumps Dry. Pumps must be in a continuous flooded suction environment.

180 Hines Ave. • Bellville, OH 44813 • PH: 419-886-3001 • FAX: 419-886-2338 • www.GRIpumps.com

15651 Series
Magnetic Drive Pumps

GRI designs and manufactures pumps and pumping solutions for the Original Equipment Market (OEM). All models shown can be configured to meet specific OEM application requirements. Contact GRI for design points that fall outside of shown parameters.

Model Number	Voltage (Type)	Amps	Body Material	O-Ring Material	Connections Inlet/Outlet (inches)	Curve (50Hz/60Hz)
15651-050	115 VAC	.45	Noryl®	EPT/EPDM	1/2 MHB	B / A
15651-051	115 VAC	.45	Noryl®	Viton®/FKM	1/2 MHB	B / A
15651-052	230 VAC	.22	Noryl®	EPT/EPDM	1/2 MHB	B / A
15651-053	230 VAC	.22	Noryl®	Viton®/FKM	1/2 MHB	B / A
15651-054	115 VAC	.45	Vectra®	EPT/EPDM	1/2 MHB	B / A
15651-055	115 VAC	.45	Vectra®	Viton®/FKM	1/2 MHB	B / A
15651-056	230 VAC	.22	Vectra®	EPT/EPDM	1/2 MHB	B / A
15651-057	230 VAC	.22	Vectra®	Viton®/FKM	1/2 MHB	B / A
15651-072	12V BLDC	1.24	Vectra®	EPT/EPDM	1/2 MHB	D
15651-073	12V BLDC	1.24	Vectra®	Viton®/FKM	1/2 MHB	D
15651-075	24V BLDC	.71	Vectra®	Viton®/FKM	1/2 MHB	D
15652-072	12V BLDC	1.24	Vectra®	EPT/EPDM	3/8 MPT	D
15652-073	12V BLDC	1.24	Vectra®	Viton®/FKM	3/8 MPT	D
15652-075	24V BLDC	.71	Vectra®	Viton®/FKM	3/8 MPT	D

BLDC = Brushless DC.
Performance at 50 Hz will be approximately 83% of the performance at 60 Hz.
FKM = Fluoroelastomer, FPT = Female Pipe Thread, MPT = Male Pipe Thread, MHB = Male Hose Barb.

Typical Dimensions

15651 Series AC Models:

15651-050
15651-051
15651-052
15651-053
15651-054
15651-055
15651-056
15651-057

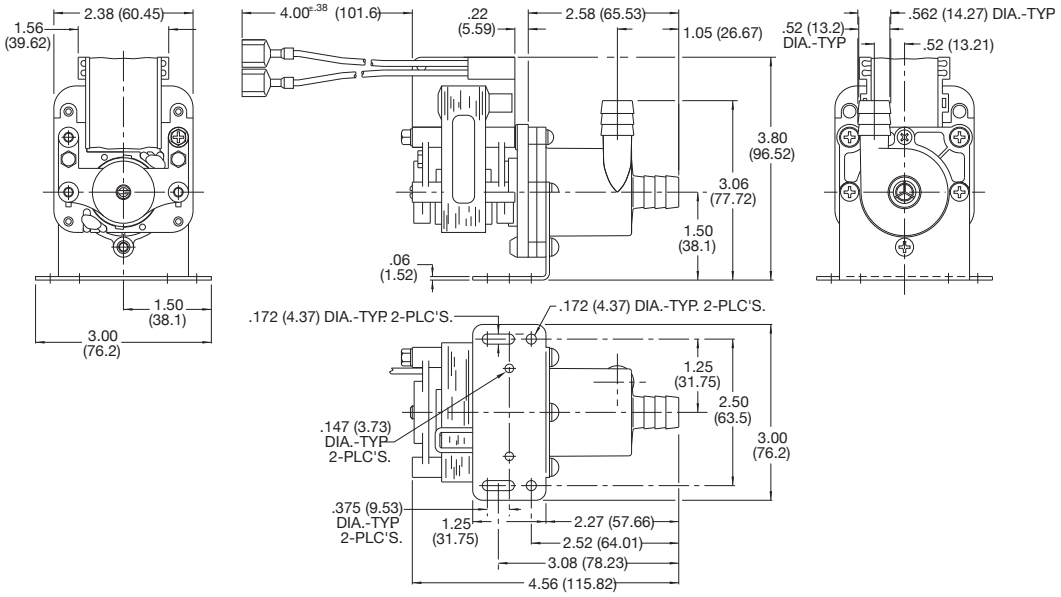

Dimensions in Inches
(Dimensions in Millimeters)

GRI PUMPS
A GORMAN-RUPP COMPANY
The Pump People

17650 Series
Magnetic Drive Pumps

Specifications	
Max Flow	9 gpm
Max Head	50 ft
Max System Pressure	75 psi
Max Fluid Temp.	160°F (71°C)
Materials in contact with solution / OEM options	
Body and Housing	• Vectra®* • Noryl® • NSF certified models available • 3/8" MNPT
Impeller	Vectra®
Bearings	Vectra®
Pump Shaft	Ceramic
Thrust Bearings	• Glass-Filled Teflon® • Reinforced Thermoplastic Resin • Vectra®
O-Rings (Elastomers)	• EPT/EPDM • Viton®/Fluoroelastomer • Nitrile • Neoprene • Silicone • Kel-F®
Motor specifications / OEM options	
Motor Specs	• 115V, 230V 50/60 Hz • Drip-Proof • Shaded Pole • 12 & 24Vdc Brushed-Type & brushless

Features	
Corrosion Resistant	Quiet operation
Hydraulically efficient	Flexible mounting and body discharge positions
No shaft seals	NSF certified models available
Low current draw and heat rise	

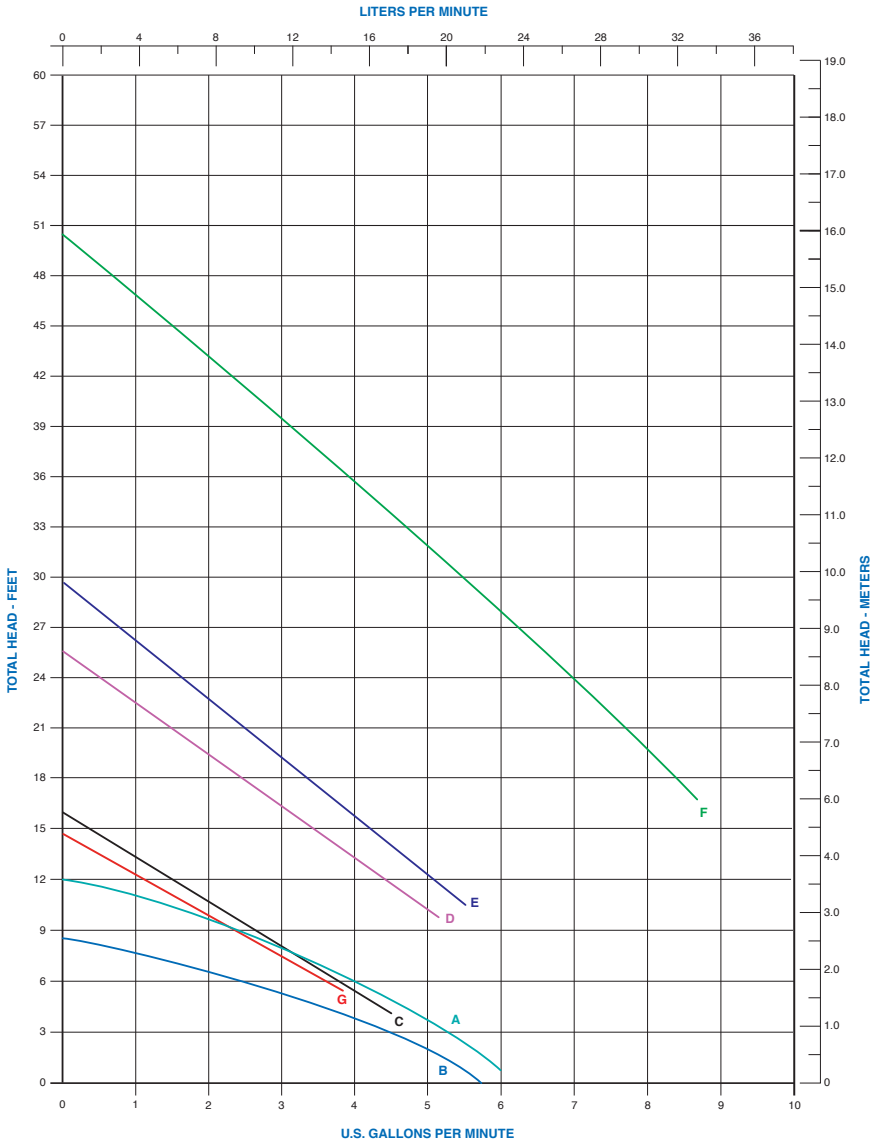

A - 60 Hz curve. **B** - 50 Hz curve. **C** - 12VDC curve. **D** - 12V BLDC curve.
E - 24V BLDC curve. **F** - 12 & 24V BLDC curve. G - 12VDC curve.

Testing performed in a controlled laboratory environment.
Actual performance may vary (+) or (-) 10%.



Do Not Run Pumps Dry. Pumps must be in a continuous flooded suction environment.

ISO 14001:2015 REGISTERED

ISO 9001:2015 REGISTERED

180 Hines Ave. • Bellville, OH 44813 • PH: 419-886-3001 • FAX: 419-886-2338 • www.GRIpumps.com

GRI PUMPS
A GORMAN-RUPP COMPANY
The Pump People

17650 Series
Magnetic Drive Pumps

GRI designs and manufactures pumps and pumping solutions for the Original Equipment Market (OEM). All models shown can be configured to meet specific OEM application requirements. Contact GRI for design points that fall outside of shown parameters.

Model Number	Voltage (Type)	Amps	Body Material	O-Ring Material	Connections Inlet/Outlet (inches)	Curve (50Hz/60Hz)
17651-050	115 VAC	.8	Noryl®	EPT/EPDM	1/2 MHB	B / A
17651-051	115 VAC	.8	Noryl®	Viton®/FKM	1/2 MHB	B / A
17651-052	230 VAC	.4	Noryl®	EPT/EPDM	1/2 MHB	B / A
17651-053	230 VAC	.4	Noryl®	Viton®/FKM	1/2 MHB	B / A
17651-054	115 VAC	.8	Vectra®	EPT/EPDM	1/2 MHB	B / A
17651-055	115 VAC	.8	Vectra®	Viton®/FKM	1/2 MHB	B / A
17651-056	230 VAC	.4	Vectra®	EPT/EPDM	1/2 MHB	B / A
17651-057	230 VAC	.4	Vectra®	Viton®/FKM	1/2 MHB	B / A
17651-060	12V BLDC	3.1	Noryl®	EPT/EPDM	1/2 MHB	D
17651-061	12V BLDC	3.1	Noryl®	Viton®/FKM	1/2 MHB	D
17651-064	12V BLDC	3.1	Vectra®	EPT/EPDM	1/2 MHB	D
17651-065	12V BLDC	3.1	Vectra®	Viton®/FKM	1/2 MHB	D
17651-068	12V BLDC	3.5	Noryl®	EPT/EPDM	1/2 MHB	G
17651-069	12V BLDC	3.5	Noryl®	Viton®/FKM	1/2 MHB	G
17651-070	12V BLDC	3.5	Vectra®	EPT/EPDM	1/2 MHB	G
17651-071	12V BLDC	3.5	Vectra®	Viton®/FKM	1/2 MHB	G
17651-078 (MDII)	12V BLDC	1.5	Vectra®	EPT/EPDM	1/2 MHB	C
17651-079	12V BLDC	1.5	Vectra®	Viton®/FKM	1/2 MHB	C
17651-081	24V BLDC	.75	Vectra®	Viton®/FKM	1/2 MHB	C
17651-085	115 VAC	.68/.56	Noryl®	Viton®/FKM	1/2 MHB	B / A
17651-091	12V BLDC	1.5	Vectra®	Viton®/FKM	1/2 MHB	G
17651-094	12V HS BLDC	—	Noryl®	EPT/EPDM	1/2 MHB	F
17651-096	24V HS BLDC	—	Noryl®	EPT/EPDM	1/2 MHB	F
17651-552	230 VAC	.35	Noryl®	EPT/EPDM	1/2 MHB	B / A
17651-557	230 VAC	.35	Vectra®*	Viton®/FKM	1/2 MHB	B / A
17652-051	115 VAC	.8	Noryl®	Viton®/FKM	3/8 MPT	B / A
17652-079	12V BLDC	1.5	Vectra®	Viton®/FKM	3/8 MPT	G
17652-081	24V BLDC	.75	Vectra®	Viton®/FKM	3/8 MPT	C
17652-552	230 VAC	.35	Noryl®	EPT/EPDM	3/8 MPT	B / A

Vectra® is chemically resistant to most acids, oxidants and bleaches, and organic solvents. (Do not use with chemicals which are bases.)
BLDC = Brushless DC. HS = High Speed. FKM = Fluoroelastomer, FPT = Female Pipe Thread, MPT = Male Pipe Thread, MHB = Male Hose Barb.
Performance at 50 Hz will be approximately 83% of the performance at 60 Hz.

ISO 14001:15 REGISTERED

ISO 9001:15 REGISTERED

180 Hines Ave. • Bellville, OH 44813 • PH: 419-886-3001 • FAX: 419-886-2338 • www.GRIpumps.com

Typical Dimensions

17650 Series AC Models:

17651-050
17651-051
17651-052
17651-053
17651-054
17651-055
17651-056
17651-057

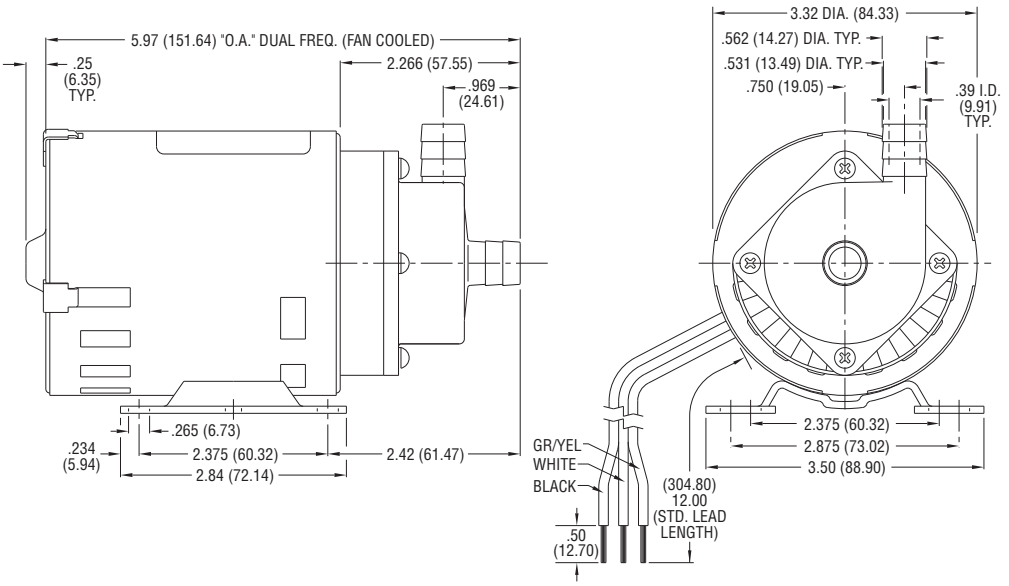

17650 Series DC Models:

17651-058
17651-059

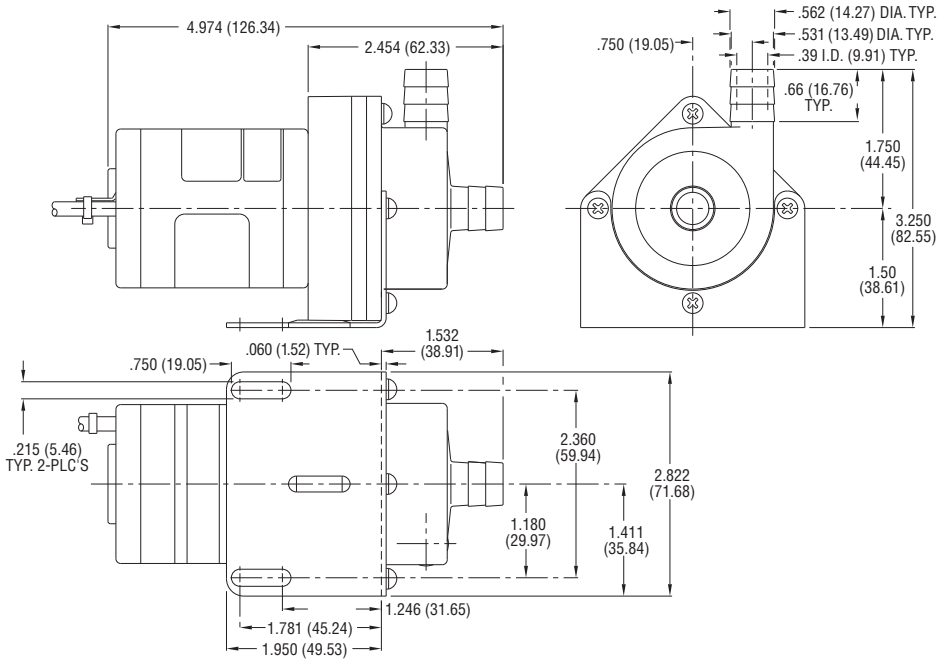

Dimensions in Inches
(Dimensions in Millimeters)

Replacement Kits
Magnetic Drive Pumps

Impeller & Bearing Kits

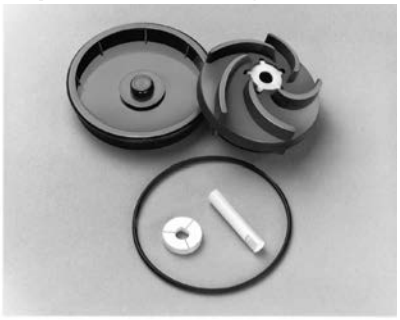

Impeller and bearing kits include front and rear thrust beaings, pump shaft, impeller bearing, adapter disc, impeller and magnet assembly and O-ring.

Body Kits



Body kit includes O-ring, body and V-band clamp assembly.

Motor Adapter Kits



Motor adapter kits include motor adapter, screws and washers.

Motor/Hub & Magnet Kit





Motor/hub and magnet kit includes motor, drive hub, magnet and set screw.

Please see Replacement Kit Chart on following page.

GRI PUMPS
A GORMAN-RUPP COMPANY
The Pump People

Replacement Kits
Magnetic Drive Pumps

Model Number	Impeller & Bearing Kit	Motor/Hub & Magnet Kit	Body Kit	Motor Adapter Kit
15651-050	—	02501-569	02501-572	—
15651-051	—	02501-569	02501-573	—
15651-052	—	02501-570	02501-572	—
15651-053	—	02501-570	02501-573	—
15651-054	—	02501-569	02501-574	—
15651-055	—	02501-569	02501-575	—
15651-056	—	02501-570	02501-574	—
15651-057	—	02501-570	02501-575	—
17651-050	—	02501-580	02501-576	—
17651-051	—	02501-580	02501-577	—
17651-052	—	02501-581	02501-576	—
17651-053	—	02501-581	02501-577	—
17651-054	—	02501-580	02501-578	—
17651-055	—	02501-580	02501-579	—
17651-056	—	02501-581	02501-578	—
17651-057	—	02501-581	02501-579	—
17651-058	—	02501-584	02501-582	—
17651-059	—	02501-584	02501-583	—
14110-050	02501-551	02500-573	02501-553	02501-072
14110-051	02501-552	02500-573	02501-554	02501-072
14110-052	02501-551	02500-574	02501-553	02501-072
14110-053	02501-552	02500-574	02501-554	02501-072
14518-050	02501-555	02500-567	02501-557	02501-074
14518-051	02501-556	02500-567	02501-558	02501-074
14518-052	02501-555	02500-568	02501-557	02501-074
14518-053	02501-556	02500-568	02501-558	02501-074
14520-050	02501-559	02500-561	02501-561	02501-074
14520-051	02501-560	02500-561	02501-562	02501-074
14520-052	02501-559	02500-562	02501-561	02501-074
14520-053	02501-560	02500-562	02501-562	02501-074
15700-050	02501-567	—	02501-565	02501-242
15700-051	02501-568	—	02501-566	02501-242

Blank Page