GRI PUMPS
A GORMAN-RUPP COMPANY
The Pump People

Oscillating Pumps

Oscillating Pumps are self-priming, corrosion resistant, have no dynamic seals and are constructed from FDA accepted materials.

Typical applications include film and microfilm processors; litho and graphic arts plate processors; detergent dispensing, chemical mixing, medical, scientific and laboratory equipment.

Oscillating pumps are intended for replenishing, transfer and circulating installations.

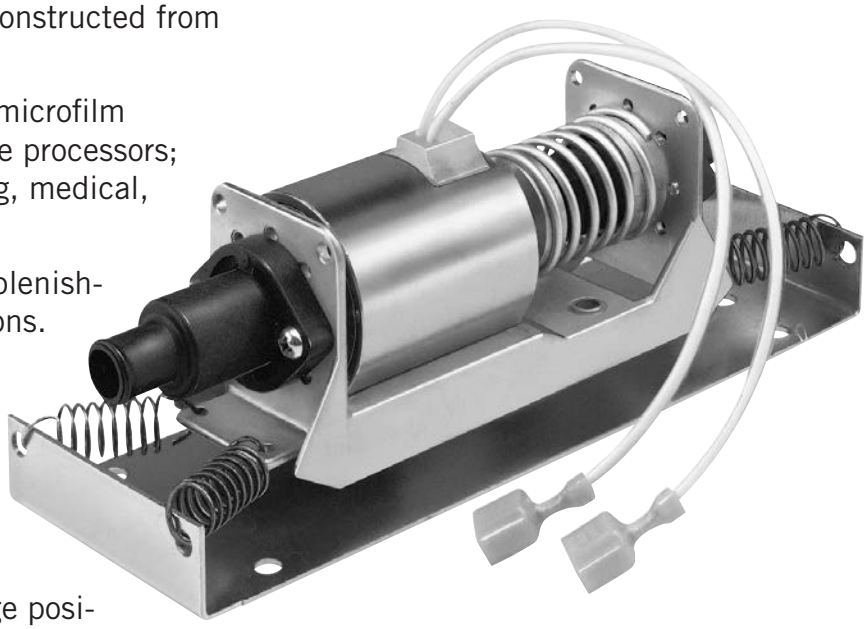

Features:
- Corrosion resistant
- Dry run capability
- Hydraulically efficient
- Quiet operation
- No shaft seals
- Flexible mounting and body discharge positions
- Low current draw and heat rise
- NSF certified models available

Contents ..... Pages

- Overview 2
- Options 3-4
- Specifications / Typical Dimensions 5-7

Oscillating Pumps Overview

Oscillating Pump Operation

An elastomeric impeller extends through a spring and armature and into an electric coil. A diode in the circuit feeds impulses to the electrical coil 60 times per second. Each pulse draws the armature and impeller forward against the spring, causing the impeller to pump a volume of liquid out through the outlet port. The spring then returns the armature and impeller to their starting position, drawing liquid through the inlet. A valve in the impeller prevents backflow of liquid.

Typical OEM applications include film processors, Laser and x-ray cooling systems, medical, scientific, laboratory and silver recovery equipment.

Pump Specifications

Flow Rates: Generally range from 0.2 to 0.8 gpm – refer to performance curve. Actual flow may be higher and may vary from pump to pump. Due to this inherent characteristic, these pumps are not normally intended for metering.

Discharge Head: To 8.3 feet (on standard models)

Self-Priming: To 48 inches (on standard models)

Fluid Temperature: To 104°F (40°C)

Weight: Approximately 1 lb.

Motors: 115v, 230v 50/60 Hz - requires a diode (included with listed models).

Agency Approvals: Most models listed in charts provided herein bear the UL Recognized Component Mark for the United States and Canada (except 14925 Series "Lab" models). Most models also have FDA listed wetted materials of construction for use in food consumable applications. NSF materials are also available. Please consult factory for details on specific models.

Wetted Materials: EPT/EPDM, FKM, Butyl, and Glass-Reinforced Polypropylene,

Contact GRI for questions regarding chemical compatibility.

Options
Oscillating Pumps

Valve Styles

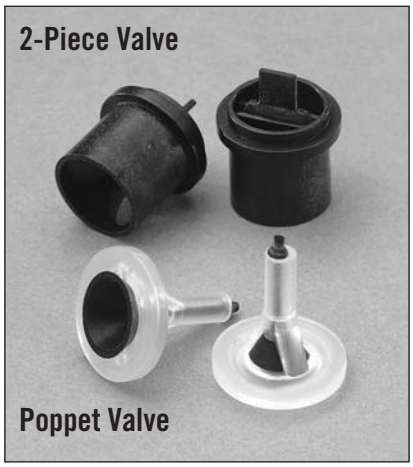

To modify the priming or performance characteristics of the pump, two valve options are available: poppet valve or 2-piece valve.

The poppet valve provides the best priming capability and more positively prevents backflow through the pump. The 2-piece valve should be used when flow is required.

Note: Valves are utilized on the discharge side of the pump. However, to more closely meet a customer's specifications, valves can be used on both the inlet and outlet side.

Tubing Connectors

Tubing connectors are made from chemically-resistant, glass-reinforced polypropylene. Currently, 10 sizes and styles are available in any inlet/outlet combination. Required tubing size is listed with corresponding photo.


⅛" - 3⁄16" I.D. Tubing


¼" I.D. Tubing


⅜" I.D. Tubing


⅜" I.D. Tubing


½" I.D. Tubing


½" I.D. Tubing


⅛" - 3⁄16" I.D. Tubing


¼" I.D. Tubing


⅜" I.D. Tubing


½" I.D. Tubing

Options
Oscillating Pumps

GRI specializes in the adaptation of standard models to meet the ever-changing needs of the Original Equipment Market. Contact us if one of our standard models does not meet your specific requirements.

Coils, Leads & Terminals

Generally, electrical coils are available in 115V or 220V and 60 Hz. However, pumps have been supplied with 115V or 220V, 50 Hz coils, and with 12, 24, and 48 volt AC coils. In addition, coils can be constructed with different power capabilities to more effectively meet customer's duty cycle needs.

Leads can be up to 6 feet long with any termination. Most common are 6 inch leads with 1/4 inch male spade terminals.



Mounting Options

The oscillating pump can be provided with three mounting styles. The rubber mount design is more compact and less expensive; however, flow rate, priming capability and discharge head are lower than the spring mounted pumps. The spring mounted model is more efficient and transmits less vibration to the mounting structure.

Rubber Mount

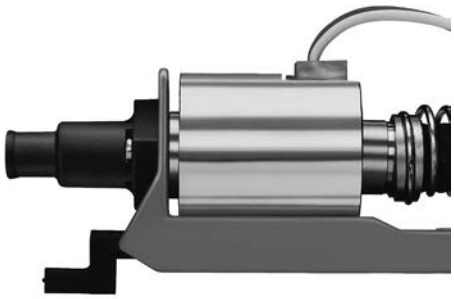

Spring Mount with Base

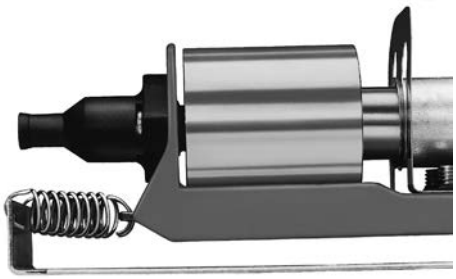

Spring Mount

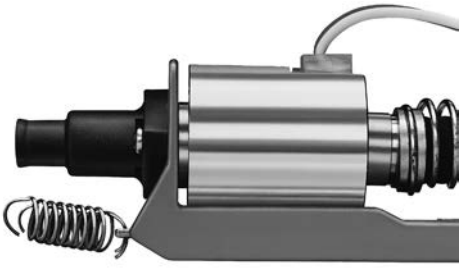

180 Hines Ave. • Bellville, OH 44813 • PH: 419-886-3001 • FAX: 419-886-2338 • www.GRIpumps.com

14825 Series
Oscillating Pump

Specifications	
Flow Rates	0.2 to 0.8 gpm. Refer to performance curve. Actual flow may be higher and may vary from pump to pump. Due to this inherent characteristic, these pumps are not normally intended for metering.
Discharge Head	To 8.3 feet (on standard models).
Self-priming	To 48 inches (on standard models).
Fluid Temp. Max	104°F (40°C)
Weight	Approx. 1 lb
Materials in contact with solution / OEM options	
Connectors	Glass-Reinforced Polypropylene.
Impeller	EPT, FKM, Butyl
Discharge Check Valve	EPT, FKM, Butyl
• Refer to the Chemical Resistance Section to help determine compatibility. (Use only elastomers with "A" rating for standard oscillating pumps.) • For aggressive-chemistry applications, contact GRI for special Glass-Ball Center Valve Oscillating Pumps (U.S. Patent 5,567,131).	
Motor specifications / OEM options	
Motor Specs	• 115V, 230V50/60 Hz • Requires diode
Features	
Self-priming	No dynamic seals
Compact	Lightweight
Economical	Can operate continuously
Moisture & corrosion resistant coiL	Outlet valve styles: Poppet - prevents backflow thru pump
Outlet valve styles: 2-Piece - allows higher flow; no backflow prevention	Leaf Spring - extremely quiet

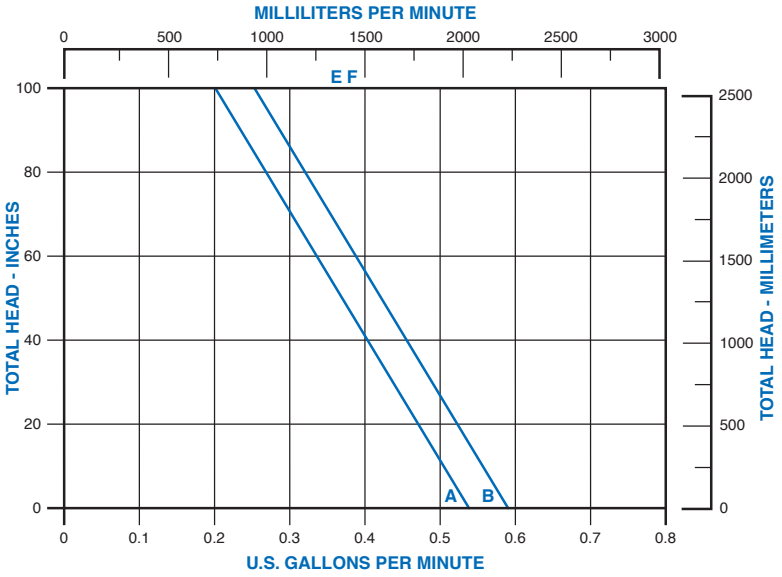

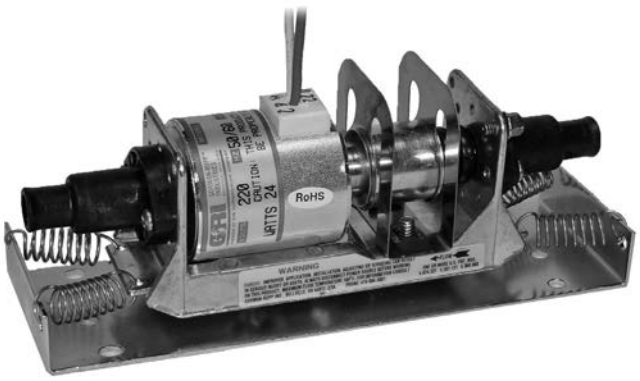

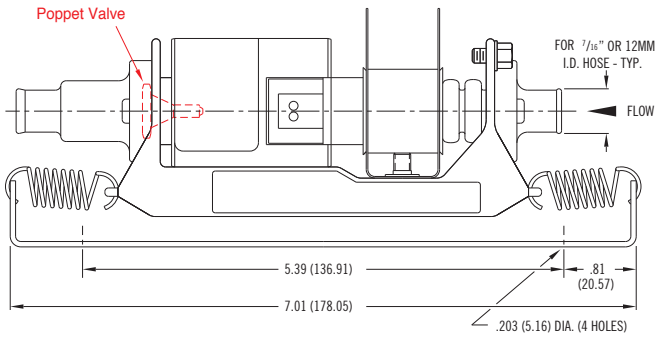

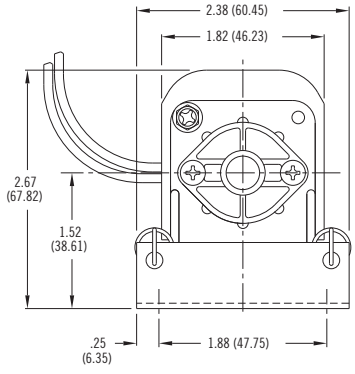

Dimensions in Inches (Dimensions in Millimeters)

180 Hines Ave. • Bellville, OH 44813 • PH: 419-886-3001 • FAX: 419-886-2338 • www.GRIpumps.com

15000 Series
Oscillating Pump

Specifications	
Flow Rates	0.2 to 0.8 gpm. Refer to performance curve. Actual flow may be higher and may vary from pump to pump. Due to this inherent characteristic, these pumps are not normally intended for metering.
Discharge Head	To 8.3 feet (on standard models).
Self-priming	To 48 inches (on standard models).
Fluid Temp. Max	104°F (40°C)
Weight	Approx. 1 lb
Materials in contact with solution / OEM options	
Connectors	Glass-Reinforced Polypropylene.
Impeller	EPT, FKM, Butyl
Discharge Check Valve	EPT, FKM, Butyl
• Refer to the Chemical Resistance Section to help determine compatibility. (Use only elastomers with "A" rating for standard oscillating pumps.) • For aggressive-chemistry applications, contact GRI for special Glass-Ball Center Valve Oscillating Pumps (U.S. Patent 5,567,131).	
Motor specifications / OEM options	
Motor Specs	• 115V, 230V50/60 Hz • Requires diode
Features	
Self-priming	No dynamic seals
Compact	Lightweight
Economical	Can operate continuously
Moisture & corrosion resistant coiL	Outlet valve styles: Poppet - prevents backflow thru pump
Outlet valve styles: 2-Piece - allows higher flow; no backflow prevention	Spring styles: Coil Spring - higher flow & efficiency, greater priming ability

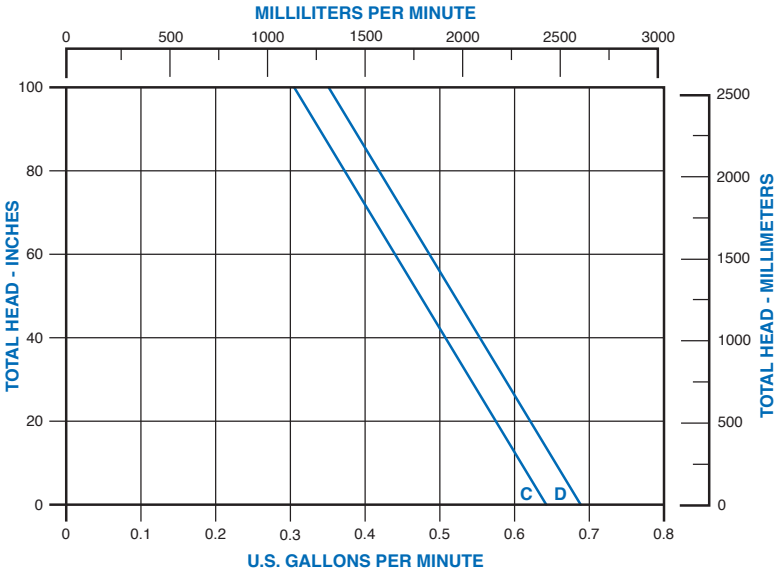

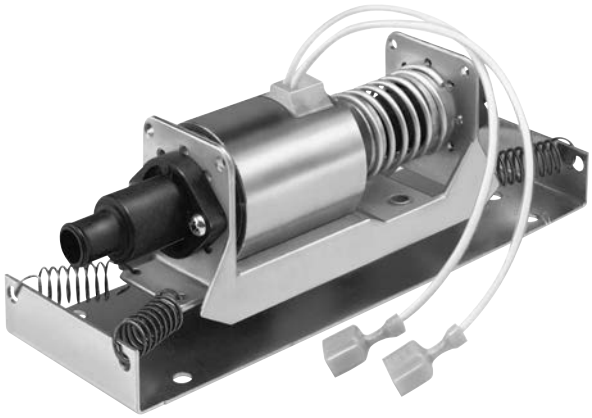

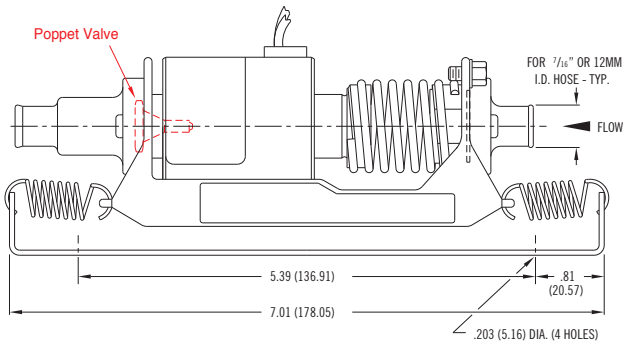

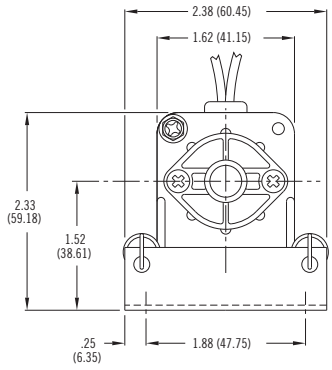

Dimensions in Inches (Dimensions in Millimeters)

180 Hines Ave. • Bellville, OH 44813 • PH: 419-886-3001 • FAX: 419-886-2338 • www.GRIpumps.com

17000 Series
Oscillating Pump

Specifications	
Flow Rates	0.2 to 0.8 gpm. Refer to performance curve. Actual flow may be higher and may vary from pump to pump. Due to this inherent characteristic, these pumps are not normally intended for metering.
Discharge Head	To 8.3 feet (on standard models).
Self-priming	To 48 inches (on standard models).
Fluid Temp. Max	104°F (40°C)
Weight	Approx. 1 lb
Materials in contact with solution / OEM options	
Connectors	Glass-Reinforced Polypropylene.
Impeller	EPT, FKM, Butyl
Discharge Check Valve	EPT, FKM, Butyl
• Refer to the Chemical Resistance Section to help determine compatibility. (Use only elastomers with "A" rating for standard oscillating pumps.) • For aggressive-chemistry applications, contact GRI for special Glass-Ball Center Valve Oscillating Pumps (U.S. Patent 5,567,131).	
Motor specifications / OEM options	
Motor Specs	• 115V, 230V50/60 Hz • Requires diode
Features	
Self-priming	No dynamic seals
Compact	Lightweight
Economical	Can operate continuously
Moisture & corrosion resistant coiL	Outlet valve styles: Poppet - prevents backflow thru pump
Outlet valve styles: 2-Piece - allows higher flow; no backflow prevention	Spring styles: Coil Spring - higher flow & efficiency, greater priming ability

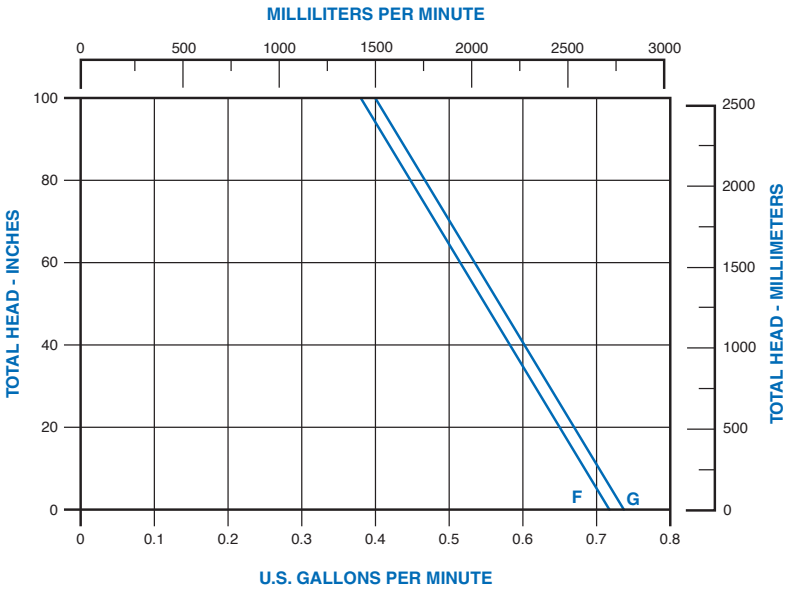

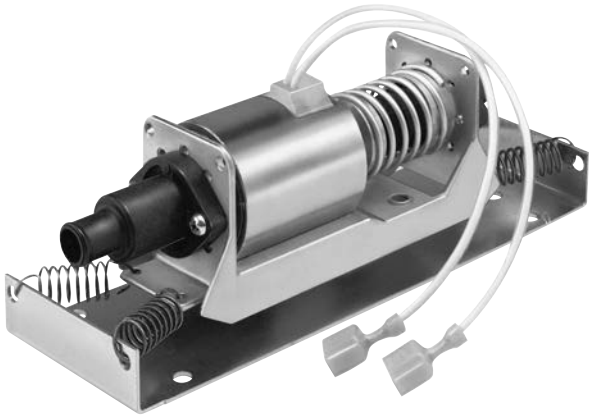

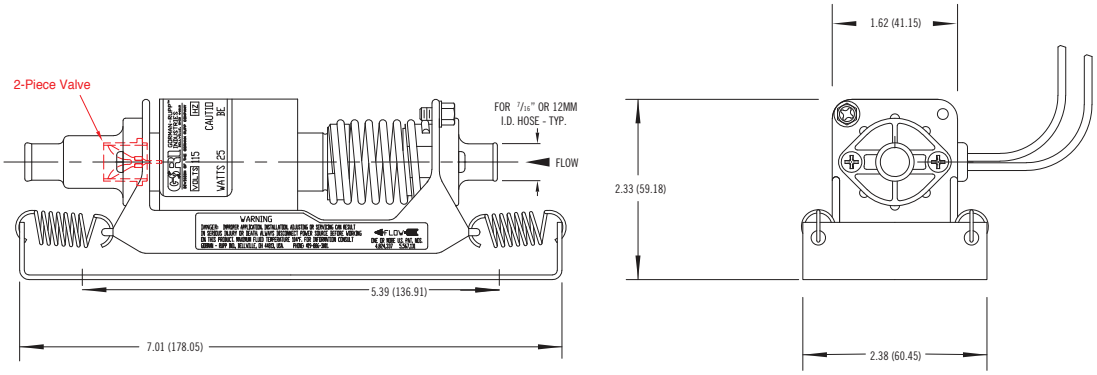

Dimensions in Inches (Dimensions in Millimeters)

180 Hines Ave. • Bellville, OH 44813 • PH: 419-886-3001 • FAX: 419-886-2338 • www.GRIpumps.com

Blank Page