CALL TOLL FREE 877-742-2878 FOR SALES AND SUPPORT Return to BurtProcess.com

# ECO Gearchem®

# Installation Operation Maintenance Instruction

Bulletin No. IMG—96

PULSAFEEDER
A Unit of IDEX Corporation

Manufacturers of Quality Pumps, Controls and Systems

ENGINEERED PUMP OPERATIONS
2883 Brighton-Henrietta Town Line Road
Rochester. New York 14623

## TABLE OF CONTENTS


PAGE

INTRODUCTION . . . . . 3

EQUIPMENT INSPECTION . . . . . 3

INSTALLATION . . . . . 4

OPERATION . . . . . 6

MAINTENANCE . . . . . 6

DISASSEMBLY - G2, G4, G6, G8, GH8, GA12, GA16 . . . . . 8

REASSEMBLY - G2, G4, G6, G8, GH8, GA12, GA16 . . . . . 10

THERMAL JACKET INSTALLATION & REMOVAL . . . . . 12

TROUBLESHOOTING . . . . . 14

PUMP SPECIFICATION CHART . . . . . 15

EXPLODED VIEW DRAWING - G2 & G4 SERIES . . . . . 16

EXPLODED VIEW DRAWING - G6 & G8 SERIES . . . . . 17

EXPLODED VIEW DRAWING - GH8 SERIES . . . . . 18

EXPLODED VIEW DRAWING - GA12 & GA16 SERIES . . . . . 19

SEAL ARRANGEMENT DRAWINGS . . . . . 20

SIGNIFICANT MODEL NUMBERING SYSTEM TABLE . . . . . 23

CONSOLIDATED BILL OF MATERIALS - G2 SERIES . . . . . 25

CONSOLIDATED BILL OF MATERIALS - G4 SERIES . . . . . 28

CONSOLIDATED BILL OF MATERIALS - G6 SERIES . . . . . 31

CONSOLIDATED BILL OF MATERIALS - G8 SERIES . . . . . 34

CONSOLIDATED BILL OF MATERIALS - GH8 SERIES . . . . . 37

CONSOLIDATED BILL OF MATERIALS - GA12 SERIES . . . . . 39

CONSOLIDATED BILL OF MATERIALS - GA16 SERIES . . . . . 41

PUMP PERFORMANCE CURVES . . . . . 43


**PUMP MODEL #**_____

## INTRODUCTION

Eco Gearchem pumps are constructed in 316SS, Alloy 20 and Alloy C. Gears are available in Alloy C, Alloy 20, glass filled TFE, Carbon/Graphite and PEEK. These pumps are used for the reliable handling of clear lubricating and non-lubricating fluids. These pumps operate over a broad range of temperatures, pressures and corrosive services for transfer applications, cyclic operations or continuous production systems.

Self priming Gearchem pumps can be operated over the entire pH range, for indoor and outdoor service, at system pressures from as low as 1mm Hg abs (vacuum) to 100 psi differential pressure and over a temperature range from -100°F to +450°F (-73°C to + 232°C). Gearchem pumps are available in flows up to 55 GPM and can be used to pump liquids with viscosities ranging from less than 1 cps up to 100,000 cps with reduced speeds.

Gearchem pumps may be quickly inspected in the field. All that is required to inspect the internal components is the removal of the rear housing. Before attempting an inspection or repair be sure to read and thoroughly understand this maintenance manual.

Pumps may be repaired either in the field or at an authorized Eco Repair Center (contact your Eco distributor for details). Field repairs can be done very quickly using Eco Kopkits which include all the parts necessary to cover practically all routine maintenance requirements.

## EQUIPMENT INSPECTION

1. Check all equipment for completeness against the order and for any evidence of shipping damage. **Shortages or damage should be reported immediately to the carrier and to your Eco distributor.**

2. If the pump is not going to be installed immediately, the following steps should be taken.

   - Leave pump in original shipping carton.
   - Store indoors in a dry ambient atmosphere. Avoid temperature variations.
   - Leave all shipping plugs in place.
   - Contact the motor manufacturer for specific motor storage information.

3. Occasionally during shipment, possible misalignment or other damage such as cracked mechanical seal faces can occur. For this reason it is recommended that each unit be tested with water in some convenient area prior to piping into the actual process system.

4. These instructions should be read carefully by the personnel responsible for installation, operation and maintenance of the equipment and kept in a convenient place for ready reference. It is recommended that a copy of the Eco order be kept with this manual as well as a written record of the pump model number which is on the name tag attached to the pump. A space has been provided inside the front cover of the manual to record this number.

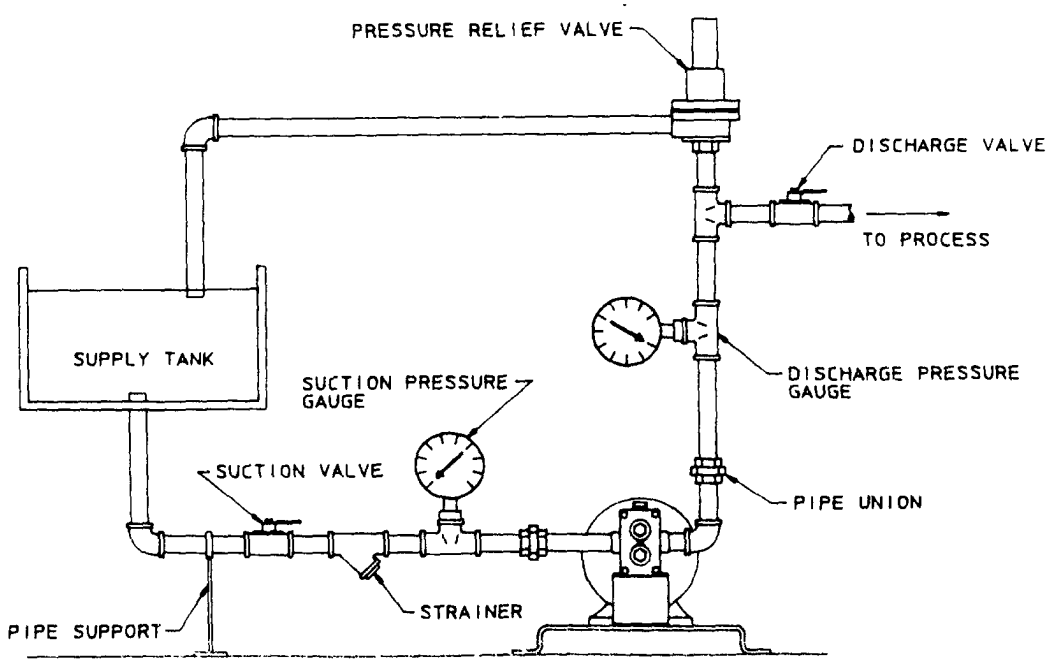


TYPICAL PUMP INSTALLATION
FIG 1

**INSTALLATION (SEE FIGURE 1)**

1. Pump installation site should be selected to provide easy access for routine maintenance and to protect the pump from damage by the elements or from leaks or drips from nearby process equipment.

2. Suction and discharge ports of Eco Gearchem pumps can be determined as follows:

   a. Looking at the pump drive shaft, the suction port is to the right of the shaft, when the shaft rotates clockwise and the drive shaft is located below the ports for standard configuration on Model G2, G4, G6, G8 and GH8.

   b. Looking at the pump drive shaft, the suction port is to the left of the shaft, when the shaft rotates clockwise and the drive shaft is located above the ports for standard configuration on Models GA12 and GA 16.

   c. Reversing drive shaft rotation reverses flow and thus suction and discharge ports for all models.

3. Keep suction lines short, straight and of sufficient size to minimize friction loss to the pump. Make sure there is sufficient suction supply, so that pump will not starve or run dry. Flooded suction or gravity feed of fluid to pump inlet is generally preferred.

4. Use only full-bore ball valves or gate valves in the suction piping. If suction strainers are required, size them to minimize pressure drop and select those of a type that are easily cleaned.

5. Arrange all suction piping and fittings to prevent formation of air pockets. Make sure all joints are tight.

6. Flush and blow out all suction lines prior to mating up to pump. Use nipples and unions, or spool pieces with flanged pumps, for ease of maintenance.

7. Do not spring piping, either suction or discharge, when mating up to pump. Use supports or hangars at intervals as required. When necessary, provide for thermal expansion and contraction so that

no strain is placed upon the pump.

8. Check carefully alignment of pump and motor or drive system. Improper alignment is one of the most common causes of seal and stuffing box problems, as well as a major cause of rapid bearing wear and eventual pump failure.

9. Check all bolts and nuts for tightness. Correct any conditions which could cause destructive vibration or leakage.

10. Where required, provide proper system for seal flush, and/or drain. Observe any special instructions for packing lubrication.

11. If start-up screens are used, be sure they do not clog and starve suction. Start up screens should be removed prior to placing system into regular operation.

12. If flexible suction lines are used, be sure their selection and installation will prevent wall collapse and thus a starved suction condition.

13. When taking suction from a tank or vessel, avoid entry of sludge, solids, etc. into suction line by placing suction line inlet above maximum expected level of solids.

14. Discharge lines from Gearchem pumps should be fitted with properly sized relief valves to protect both pump and discharge system. Relief valve outlet should be piped back to suction vessel.

15. When a by-pass system is used to control flow from the pump, the bypassed fluid should be piped back to the suction vessel to prevent heat build-up due to recirculation. If it is absolutely necessary to pipe by-pass back to the pump suction line, the point of entry should be at least 10 pipe diameters away from the suction inlet. Provision for cooling should be made in the event of excessive heat buildup through fluid recirculation.

16. Where pumped fluids may solidify, crystalize, precipitate etc., provision should be made to thoroughly flush pump and piping during periods of shutdown. Pay particular attention to proper flushing of seal or stuffing box area.

## MECHANICAL SEALS

Three basic seal types are offered as standard: internal, external, and double seal. All mechanical seals require cooling and lubrication. For long and troublefree seal life:

1. Do not run pump dry. Make sure pump is primed, suction is not starved, sufficient NPSH is available and your system is such that seal surfaces are wet. If a seal flush system is used, make sure that it is operating while the pump is operating. Double seals require a seal flush.

2. Keep abrasives out of the seal area. Dirty flush streams, whether piped from the pump discharge or from a separate source, will destroy the rotating and stationary seal mating surfaces.

3. Make sure pump and driver are properly aligned. Misaligned seal mating surfaces will not function. Excessive vibration will also prevent proper seal function and cause early failure.

4. Determine that seal materials of construction are compatible with pumped fluid. Be sure to check this when changing application.

## PACKED STUFFING BOXES

The basic housekeeping procedures for mechanical seals also apply to packed pumps. For proper operation, the stuffing box area must be cooled and lubricated. Do not overtighten packing. Where packing lubricant is required, use it. Run in new packing carefully. Care and time taken at this stage will minimize down time and maintenance costs. Misalignment and vibration also shorten packing life. Flush streams to lantern ring stuffing boxes are as important as flush streams to mechanical seals.

## OPERATION

1. Prior to operation, recheck installation according to instructions Be sure electrical service to motor agrees with nameplate requirements Jog to check rotation and rewire motor if necessary.

2. Lubricate packing, if required, using suitable lubricant. Where pump is equipped with lantern ring stuffing box, and recirculating flush check for proper piping from pump discharge to lantern ring nipple. Where thorough flush of lantern ring stuffing box is intended, check flush stream piping to and from stuffing box.

3. Check mechanical seal flush arrangements where used. Pressurized flush to double seal chamber must be in operation, at an inlet pressure of 10 to 15 psi above intended pump discharge pressure, prior to and when operating pump. Flush must continue when pump is stopped until pump pressure is reduced to within 20 psi of double seal chamber pressure.

   Where external seal cooling is required, provide for drip feed of cooling liquid over rotating seal head. Where internal seal cooling and lubrication by flush stream is intended, check piping from pump discharge to seal housing or from external source to seal housing. Make sure all flush streams are clean.

4. Make sure discharge valves are open, start pump and check for proper operation. Adjust packing as necessary, but allow sufficient time for proper run in. Check flush streams for proper operating pressure and flow. If pump bearing areas run hot, or seal/stuffing box areas run hot, shut pump down and determine cause.

5. • **Do not run dry.**

   • **Do not pump abrasives.**

   • **Do not run metal/metal gears below 100 cps or faster than 1450.**

## MAINTENANCE

The timing for maintenance of the pump is established primarily on past performance Each installation is different. Therefore detailed maintenance records of past performance can be invaluable for determining future preventative maintenance intervals. During routine pump inspections pay particular attention to the mechanical seal and bearing areas because those areas will determine future maintenance intervals For motor maintenance instructions consult the motor manufacturer.

### CAUTION

**Before performing any maintenance requiring pump disassembly, be sure to flush pump thoroughly with a neutralizing fluid. Wear protective clothing and handle equipment with proper care.**

1. Changing Service
   When changing a pump from one service to another, be sure to check that all wetted parts of the pump (including seals) are compatible with the fluid to be handled and that the motor is sufficiently sized for the application. If in doubt contact your Eco distributor.

2. Inspect for Wear

   Whenever gear pumps exhibit reduced flow rates, inability to maintain pressures, noisy or otherwise abnormal operation, first refer to the troubleshooting section. If the problem cannot be resolved the pump must be inspected for wear or damage. Eco Gearchem pumps can be easily opened for cleaning and inspection without disturbing piping connections by removing the pump rear housing.

   Where inspection shows wear, rebuilding the pump using an Eco KOPkit is strongly recommended. Where pumps are equipped with two metallic or plastic gears, replacement with a new set is preferred. Pumps have a metallic drive gear and plastic idler gear can often be restored to original performance by replacing the idler gear alone.

3. Mechanical Seal Design

   Eco Gearchem pumps equipped with mechanical seals use either single internal, single external or a double seal. In addition there is a variation, for vacuum service, of the external seal whereby the seal housing is lengthened between the seal and the pump. All seals are Type 9. These configurations are illustrated in Drawing SD-2652 and SD-2778.

All mechanical seal types used in Eco Gearchem pumps consist of a rotating seal head fixed to the shaft with set screws and a stationary seal face (or faces in the case of double seals) mounted in the seal housing with a TFE O-ring gasket.

4. Mechanical Seal Maintenance

For proper seal functioning, the following conditions must be met:

a. The seal faces must be smooth, free of cracks, chips, or ridges and free of score marks particularly those which emanate radially. Seal faces showing only light scratches or marks may be relapped. Eco lapping standards are smooth and flat to 3 helium light bands. Avoid touching sealing faces.

b. The seal faces must be perpendicular to the shaft axis and run true. A bent shaft can prevent proper sealing.

c. Secondary sealing elements such as O-rings and Teflon wedges must be installed so as not to pinch, cut or damage them. The use of a "bullet" to introduce the seal head onto the shaft helps prevent damage Also the use of a lubricant that is compatible with the fluid being pumped is helpful.

d. The shaft must be free of nicks and scratches in the sealing area, particularly spiral scratches When reinstalling a Type 9 seal head make sure the setscrews are backed out so as not to damage the shaft when sliding the seal on.

e. Install the seal with the correct compressive contact. Dimensions and directions are given for each model in the Reassembly Section.

f. A seal flush must be used for all double seal installations. The flush must be clean and introduced at a pressure about 10 to 15 psi higher than discharge pump pressure. For best results the flush inlet should be connected to the lowest of the two flush connections.

g. When reinstalling refurbished seal seats, always use a new seal seat O-ring Slowly heat TFE o-ring in water or other suitable solution until temperature reaches 160° - 175°F. Slip over seal set into position on O-ring groove and let cool.

Do not use any pointed or sharp edged instruments that might cut or damage the O-ring during this operation. New seal seats shipped from the factory include the O-ring already fitted to the seat.

5. Stuffing Box Design

Eco Gearchem pumps with packing use either a plain stuffing box or one equipped with a lantern ring. GH8, GA-12 and GA-16 packed pumps are supplied only in the later configuration

6. Stuffing Box Maintenance

Install packing rings carefully in the sequence noted on the drawings Be sure gland is clean and that shaft is not scored. New packing on a damaged shaft will not seal. Where lantern rings are used, check to make sure they are properly positioned under the fitting so that flush streams or lubricants will have access to the lantern ring.

Recommended lubricants are:

| SERVICE | LUBRICANT | TYPICAL SOURCE |
|---|---|---|
| 1 Solvents | 1. Soap-free grease | 1. Keystone 5P9 |
| 2. Acids/Alkalies | 2. Fluorocarbon grease | 2 Halocarbon 25/20M |
| 3. High temperatures | 3 Silicone/Carbon/Graphite | 3. Dow Corning 41 |

Do not overtighten packing. Run in a new set carefully, taking up on the gland nut a little at a time. If the gland runs hot, it is generally a sign that the packing is too tight. Damage to both shaft and packing will result A properly packed and adjusted stuffing box will leak perhaps 10 drops every 3 to 5 minutes

7. Significant Model Number

   The significant model number stamped on the pump name plate, identifies the pump type, the seal arrangement, and other details, Refer to the significant model number chart in this manual if you are unsure of exactly what type of pump or seal you have.

   Always refer to the full model number in any correspondence with your Eco distributor. Drawings and a consolidated parts list for each Gearchem pump are included in this manual. Recommended spare parts are denoted on the consolidated parts list.

## RECOMMENDED SPARES

KOPkits. The basic Gearchem KOPkit consists of the following parts which are recommended as spares:

Drive Shaft
Idler Shaft
Drive Gear
Idler Gear
Drive Gear Key
Idler Gear Key
Bearings
Wear Plates
Bearing Lock Pins
Housing O-Rings
Drive Gear Retaining Rings
Idler Gear Retaining Rings
Shaft Seal Arrangement as Required*
*(Packing or Mechanical)

A KOPkit is completely identified by placing the letter "K" before the pump significant model number and deleting the hyphens. Example: A KOPkit for G6-ACT-KKT would be KG6ACTKKT.

## DISASSEMBLY

Prior to any disassembly please:

- **Close discharge and suction valves.**
- **Disconnect power source to motor.**
- **Flush and drain pump.**

**I. Single Internal Mechanical Seal (G2, G4, G6, G8).**

**Reference Drawing SD-2537, SD-2538.**

1. Loosen gland lock nut (Item 35) and unscrew gland nut (Item 36).
2. Pull out seal seat (Item 55) with seat O-ring. Inspect as noted previously.
3. Remove either pipe plug (Item 62) and rotate shaft to allow access to seal head set screws. Loosen screws sufficiently to allow removal of seal head (Item 60).
4. Turn pump so that drive shaft is pointing down thereby allowing seal head to slide off shaft. If seal head does not come out easily, it will be necessary to remove seal housing (Item 30)
   a. Back off seal housing lock nut (Item 32).
   b. Unscrew seal housing (Item 30) to expose seal head (Item 60).
   c. When reassembling, fit new seal housing gasket (Item 31).
5. Inspect seal head as noted previously.

**II. Single Internal Mechanical Seal (GH8, GA12, GA16).**

**Reference Drawing SD-2613, SD-2775**

1. Remove seat retainer bolts (Item 39A) and seat retainer (Item 36) with seat retainer pin, drive end seal seat (Item 55) with seat ring and seat retainer O-ring (Item 37).
2. Visually inspect drive end seal seat (Item 55).
3. If replacement is required, carefully remove drive end seal seat (Item 55) by inserting a "L" shaped tool between seal seat and seat retainer (Item 36) and exert a firm pulling action.
4. Remove pipe plug (Item 62 or 63) on top of drive end of front housing (Item 1) and rotate shaft to allow access to seal head (Item 60) set screws Loosen screws sufficiently to allow removal of seal head (Item 60) and withdraw over shaft. Inspect seal head. Replace if necessary.

## III. Single External Mechanical Seal (G2, G4, G6, G8).

1. Loosen set screws in seal head and slide seal head off shaft.
2. Loosen gland lock nut (Item 35) and unscrew gland nut (Item 36).
3. Pull out seal seat (Item 55) with seat O-ring.
4. Inspect seal seat and seal head as noted previously.

## IV. Double Mechanical Seal (G2, G4, G6, G8).

**Reference Drawings SD-2537, SD-2538**

1. Loosen gland lock nut (Item 35) and unscrew gland nut (Item 36).
2. Pull out drive end seal seat (Item 55) with seat O-ring. Inspect as noted previously.
3. Remove flush connection so as to give access to seal head set screws. Rotate shaft to allow access to seal head set screws, and loosen set screws to allow removal of seal head (Item 60). With G6 pumps, seal housing must be unscrewed to allow access to set screws. (See Step5).
4. Remove seal head (Item 60) and inspect as noted above.
5. Loosen seal housing lock nut (Item 32) and unscrew seal housing (Item 30).
6. Pull out pump end seal seat (Item 56) with seat O-ring. Inspect as noted previously.

## V. Double Mechanical Seal (GH8, GA12, GA16).

**Reference Drawing SD-2613, SD-2775**

1. Remove seat retainer bolts (Item 39A) and seat retainer (Item 36) with seat retainer pin holding the drive end seal seat with seat ring and seat retainer O-ring.
2. Visually inspect drive end seal seat.
3. If replacement is required, carefully remove drive end seal seat by inserting a "L" shaped tool between seal seat and seat retainer (Item 36) and exert a firm pulling action.
4. Remove pipe plug (Item 62 or 63) on top of drive end of front housing (Item 1) and rotate shaft to allow access to seal head and withdraw over drive shaft (Item 4). Inspect seal head. Replace if necessary.
5. Visually inspect pump end seal seat.
6. If replacement is required, it will be necessary to remove front housing (Item 1) from the pump. (Disconnect any piping from front housing to allow disassembly).
7. Unbolt front housing (Item 1) from center housing (Item 2) and carefully slide the front housing over drive shaft(Item 4).
8. To replace pump end seal seat carefully remove by inserting an "L" shaped tool between seal seat and front housing and exert a firm pulling action.

## VI. Pump Internals

**Reference Drawings SD-2537, SD-2538, SD 2613, SD-2775**

1. After removing the mechanical seal assembly, if it is necessary to either inspect or repair the pump internals, remove the pump housing bolts and rear housing (Item 3).
2. The gears (Items 6, 7) and wear plates (Item 15) are now accessible and can readily be removed along with the drive and idler shafts (Items 4, 5) from the center/front housings (Items 2, 1).
3. The gears can be removed from the shafts by removing one of the retaining rings and sliding the gears off their respective shafts.
4. Inspect all parts for signs of wear or damage. The maximum diametral clearance (bearing I.D. - shaft O.D.) that is acceptable is .010 inches. Shafts and bearings that are scored or worn must be replaced. Gears and wear plates with excessive wear or scoring must also be replaced.
5. Clean all parts before reassembly.

## REASSEMBLY

### I. Pump Internals

It is recommended that an Eco KOPkit be used when repairing a pump. The KOPkit comes with gears already assembled to the shafts and significantly reduces the repair time. If a KOPkit is being used proceed to Step 2.

1. Install the drive and idler gear (Items 6, 7) onto their respective shafts (Items 4, 5) using keys (Items 8, 9) and retaining rings (Items 10, 11). Take care not to scratch the shafts when installing the rings. Check the ends of the rings for sharp burrs. If a plastic and metal gear set are being used, the plastic gear is always the idler gear.

2. Install new bearings (Items 12, 13) in both the front and rear housing. Make sure that bearing lock pins (Item 14) are installed on each bearing.

3. Install (2) new O-rings (Item 16) in the groove on each side of the center housing.

4. Install a pair of wear plates (Item 15) on the front housing. Bring the front and center housing together with the (2) housing pins (Item 17) installed in their location holes.

5. Install the drive and idler gear shaft assemblies into the center/front housings assembly.

6. Install a pair of wear plates (Item 15) into the rear housing and assemble the rear housing to the pump along with (2) more housing pins

7. Install the 4 housing bolts and nuts and tighten.

### II. Single Internal Mechanical Seal (G2, G4, G6, G8).

**Reference Drawings SD-2537, SD-2538**

1 Prior to installation of new seal, clean seal housing (Item 30) and shaft. Burrs, etc. on shaft may damage the TFE wedge when passing over the shaft.

2. Lightly coat seal head face and I.D. with oil or TFE spray and carefully slip over shaft and into seal housing with the face end out.

3. If using a refurbished seal seat (Item 55), install new TFE O-ring (Item 55A) and pass over shaft, pushing seal head (Item 60) in front of it until inboard side of O-ring groove in seal seat (Item 55) comes flush with end of seal housing (Item 30)

4 Carefully tighten seal head set screws through pipe plug port in seal housing, taking up on each gradually while rotating shaft.

5 Reinstall gland nut (Item 36) and tighten, thereby compressing seal seat surface against spring loaded seal face.

6. Tighten gland nut and gland lock nut (Item 35).

### III. Single Internal Mechanical Seal (GH8, GA12, GA16).

**Reference Drawing SD-2613, SD-2775**

1. Before replacing seat assembly, lubricate seal ring with lightweight machine oil or other lubricant compatible with pumped fluid. Then carefully align slot in seal seat (Item 55) with seat retainer pin. Place protective material over polished seal seat surface and press seal seat into seat retainer (Item 36).

2. To reassemble, install seal head (Item 60) on drive shaft and remove holding clips. Adjust seal head so that seal face is approximately 145 inches back from the front surface of the front housing on GA12/16 models. On GH8 model center set screw on seal head in pipe plug port

3. Tighten seal head set screws through tapped port. Replace pipe plug (Item 62 or 63).

4. Assemble seat retainer (Item 36) with seal seat installed and a new seat retainer O-ring (Item 55A) over drive shaft (Item 4).

5. Tighten seat retainer bolts (Item 39A) which will set proper compression on seal head.

## IV. Single External Mechanical Seal (G2, G4, G6, G8).

**Reference Drawing SD-2537, SD-2538**

1. Prior to installation of either refurbished or new seal parts, clean housing and shaft. Remove any burrs or buildup which could damage TFE wedge. Make sure there are no sharp edges on end of shaft or on shaft flat.

2. If using refurbished seal seat install with a new TFE O-ring, and slide over shaft into the front housing (Item 1) with the lapped side facing out.

3. Screw on gland nut (Item 36) to position seat and tighten.

4. Tighten gland lock nut (Item 35)

5. Lightly coat seal head face and I.D. with oil or TFE spray. Carefully and gently, push seal head over shaft, taking care not to damage TFE wedge or seal face.

6. Pull shaft away from pump as far as built-in end play will allow it, then fully compress seal head face against seal seat, and then back off seal head until 1/32" of seal face becomes visible. Tighten seal head set screws securely.

## V. Double Mechanical Seal (G2, G4, G6, G8).

**Reference Drawing SD-2537, SD-2538**

1. Install new seal housing gasket (Item 31), screwing it down the front housing hub until it meets the lock nut.

2. Install new or refurbished pump end seal seat (Item 56) with new O-ring. Slide seal seat over shaft until O-ring is still visible and has not yet entered front housing (Item 1).

3a. For G2 & G4 pumps, replace seal housing (Item 30) and install new or refurbished seal head (Item 60), making sure set screws are backed out and will not mar shaft. Do not tighten set screws.

3b. For G6 and G8 pumps, install new seal head as above, but prior to replacing seal housing (Item 30), push seal head against pump end seal seat (Item 56) compressing seal face as far as it will go. Tighten seal head set screws.

4 Screw seal housing tightly on pump hub, compressing O-ring and locking pump end seal seat firmly in place.

5. Push seal housing gasket (Item 31) up against recessed bore in seal housing and tighten lock nut (Item 32).

6. Install new or refurbished drive end seal seat (Item 55) with new seat O-ring.

7. Screw on gland nut (Item 36) and tighten firmly compressing seat O-ring and locking drive end seal seat in place Tighten gland lock nut (Item 35).

8. With G2 & G4 pumps, center seal head setscrews with seal housing port and tighten set screws.

9. Reinstall flush connections.

Note. It is recommended that seal be tested at this point by pressurizing seal housing with suitable fluid at 10-15 psi above pump discharge pressure Rotate shaft by hand and observe for any leakage along the shaft in either direction. If leakage rate is small sometimes a run in period of 5-20 minutes will cause everything to seat properly

## VI. Double Mechanical Seal (GH8, GA12, GA16).

**Reference Drawing SD-2613, SD-2775**

1. Before replacing seat, lightly lubricate seat ring. Then carefully align slot in seal seat with pump end seat pin. Place protective material over polished seal seat surface and press seal seat into front housing (Item 1).

2. Reassemble front housing to pump. Replacement of housing O-ring (Item 16) is recommended, Install seal head on drive shaft (Item 4). Remove holding clips. Adjust seal head so that contact is made with pump end seal seat. Assembly seat retainer with drive end seal seat, previously installed and a new seat retainer O-ring (Item 37). Tighten seat retainer bolts (Item 39A) which will set proper compression on seal head.

3. Tighten seal head set screws through port. Replace pipe plug (Item 62 or 63) and previous piping for flushing of double seal.

4. Test seal installation before returning pump to service. Using flush connections in front housing, pressurize the seal cavity in the front housing at 10-15 psi above pump discharge pressure. To be sure components are seated properly, rotate shaft by hand several times. Remove front drive bearing flush plug to observe pump end of shaft. Observe shaft and gland at coupling end. There should be zero leakage from either end.

**BOLT-ON THERMAL JACKETS**
**INSTALLATION**

The following tools are required:

- Suitable wrenches (open end socket or adjustable) to bolt jacket halves together with 1/4", 3/8", or ½". Bolts provided with jacket.

- Heat transfer cement (Termon "standard grade: or equivalent) to fill any slight clearance between the interior surface of the bolt-on jacket and the exterior surface of the pump.

- A suitable mason's trowel to apply heat transfer cement to the interior surface of the jacket.

- Damp paper towels or rags for clean-up.

1. Install Gearchem pump that is to be jacketed in the process line.

2. Visually inspect pump to be jacketed and remove any foreign material (debris, packing lists, or identification tags) which might come between the inner jacket surface and the pump. NOTE: Pumps having painted surfaces require no special preparation. Paint should be dry.

3. Check for proper fit of the bolt-on jacket halves by removing bolts which hold the halves together, and place both halves around the pump. Normally there is a slight clearance between the inner jacket surface and the pump.

4. Remove jacket halves from the pump and lay them on a clean, dry, work area, inner surfaces face up.

5. With a trowel, coat the inner surfaces of the jacket halves with heat transfer cement. Coating should be approximately 1/8" to 1/4" thick. Also dab a small quantity of the cement on the back of the pump flanges in three or four places.

6. Place jacket halves with heat transfer cement on pump and press firmly in place. Bolt jacket halves together with jacket bolts removed in Step 3.

7. Tighten bolts alternately to assure snug, even seating of the jacket halves on the pump. NOTE: As bolts are tightened alternately excess heat transfer cement will extrude from edges of the jackets and at flange interfaces. Remove this excess cement with trowel.

8. Use damp rags or paper towels to clean any excess heat transfer cement from the installation. Make sure there is no heat transfer cement on the threads of the valve stems.

9. Allow heat transfer cement to dry for 24 hours (above 32°F) before applying heating medium to the bolt-on jacket

**REMOVAL**

The following tools are required:

- Rubber or plastic mallet to dislodge jacket halves form heat transfer cement and pump.

- Suitable wrenches (open-end, socket or adjustable) to remove bolts holding jacket halves on pump.

- A hand chisel to remove any chunks of heat transfer cement that adhered to the inner surfaces of the bolt-on jacket.

1. **Turn off heating medium supply and allow jacket/pump to cool to ambient temperature**. Remove heating medium jumpovers from jacket halves with suitable wrenches. NOTE: If jacket halves are being removed to repair the pump or replace it with an identical component and flexible metal hoses are used as jumpovers, it is normally unnecessary to remove the jumpovers. Work on the pump can proceed with the jacket halves dislodged from the pump while the heating medium jumpovers remain connected to the drain and supply couplings.

2. Remove bolts holding jacket halves on the pump. Tap the jacket halves lightly with a rubber or plastic mallet to dislodge them from the pump. NOTE: Jacket halves may be pried apart with a screwdriver or hand chisel, but this should be done very carefully with only nominal force.

3. In most instances, the heat transfer cement adheres to the pump and not the inner surfaces of the jacket. The cement can be easily chipped away from the pump surface with a hand chisel. Any chunks of the heat transfer cement adjoining to the inner surface of the jacket halves should be removed also. Residual traces of heat transfer cement on the inner surfaces of the jacket halves need not be removed. These traces neither affect a good fit nor inhibit good thermal performance.

4. When inside surfaces of jacket halves are clean, the jacket is ready for re-use. If the gear pump is to be repaired and reused, be sure to remove heat transfer cement adhering to its surface before reinstalling the ECO bolt-on jacket.

# TROUBLESHOOTING

| DIFFICULTY | PROBABLE CAUSE | REMEDY |
|---|---|---|
| **NO LIQUID DELIVERY** | 1 Pump not primed<br>2 Suction and/or discharge valve closed<br>3 Wrong direction or rotation<br>4 Suction plugged<br>5 Air leak in suction<br>6 Suction lift too high<br>7 Motor incorrectly wired | 1 Prime pump<br>2 Open valves<br>3 Reverse rotation<br>4 Eliminate plug<br>5 Locate and repair leak<br>6 Do not exceed vapor pressure of liquid<br>7 Check wiring diagram |
| **LOW LIQUID DELIVERY** | 1 Discharge pressure higher than expected.<br>2 Air leak in suction<br>3 Rotational speed incorrect<br>4 Pump worn or damaged internal parts | 1 Reduce pressure<br>2 Locate and repair leak<br>3 Check speed and wiring<br>4 Inspect and repair as required |
| **PUMP GRADUALLY LOSES PRIME** | 1 Air leak in suction<br>2 Suction lift too high<br>3 Air or gas in liquid<br>4 Pump worn or damaged | 1 Locate and repair leak<br>2 Increase suction pressure<br>3 Eliminate air or gas<br>4 Inspect and repair as required |
| **PUMP NOISY** | 1 Pump cavitating<br>2 Pump worn or damaged<br>3 Air or gas in liquid<br>4 Foreign particles in liquid | 1 Increase suction pressure to provide sufficient NPSH<br>2 Inspect and repair as required<br>3 Eliminate air or gas<br>4 Install (or clean) strainer in inlet pipe |
| **MOTOR RUNS HOT OR OVERLOADS** | 1 It is normal for motors to feel hot even when not overloading<br>2 Discharge pressure too high<br>3 Liquid viscosity higher than expected<br>4 Rotational speed too high<br>5 Binding internal pump parts<br>6 Motor wired incorrectly | 1 Check motor amp draw to be sure<br>2 Lower pressure Check pressure relief valve setting and for defective discharge pressure gauge<br>3 Thin liquid or install larger motor<br>4 Reduce speed<br>5 Inspect and correct condition<br>6 Check wiring diagram |
| **SEAL LEAKS** | 1 Operated pump dry (starved suction, dry prime)<br>2 Solids in product<br>3 Material incompatibility with product<br>4 Viscosity | 1 Open valves and prime pump<br>2 Add strainer in suction piping (100 mesh)<br>3 Consult Factory<br>4 Consult Factory |

# PUMP SPECIFICATION CHART

| | PUMP SIZE | | G2 | G4 | G6 | G8 |
|---|---|---|---|---|---|---|
| | MAXIMUM FLOW @ 1750 RPM, 0 PRESSURE | GPM ($M^3$/HR) | 1 5 (.34) | 3 0 ( 68) | 10 0 (2.3) | 22 0 (5 0) |
| | MAXIMUM FLOW @ 1150 RPM, 0 PRESSURE | GPM ($M^3$/HR) | 1.0 (.23) | 2 0 ( 45) | 6 4 (1 5) | 14.5 (3.3) |
| | THEORETICAL DISPLACEMENT | GAL/100 REV (cc/REV) | 108 (4.08) | 189 (7 15) | 684 (25.89) | 1 3687 (51.78) |
| | MAXIMUM DIFFERENTIAL PRESSURE | PSI (BARS) | 100 (6.9) | 100 (6.9) | 100 (6.9) | 50 (3 45) |
| | MAX DIFF.PRES. PLASTIC/PLASTIC GEARS | PSI (BARS) | 50 (3.45) | 50 (3.45) | 50 (3.45) | 50 (3 45) |
| | MAXIMUM CASING PRESSURE | PSIG (BARS) | 150 (10 3) | 150 (10 3) | 150 (10.3) | 150 (10.3) |
| | TEMPERATURE RANGE : METAL/METAL GEARS | | -100 TO +450 °F | -100 TO +450 °F | -100 TO +450 °F | -100 TO +450 °F |
| | METAL/CARBON GEARS | | (-73 TO +232 °C) | (-73 TO +232 °C) | (-73 TO +232 °C) | (-73 TO +232 °C) |
| | METAL/PEEK GEARS | | | | | |
| | PEEK/PEEK GEARS | | | | | |
| (1) | METAL/PLASTIC GEARS | | 0 TO +210 °F | 0 TO +210 °F | 0 TO +210 °F | 0 TO +210 °F |
| (1) | PLASTIC/PLASTIC GEARS | | (-18 TO +99 °C) | (-18 TO +99 °C) | (-18 TO +99 °C) | (-18 TO +99 °C) |
| (2) | MAXIMUM VISCOSITY | SSU (CPS) | 500000 (100000) | 500000 (100000) | 500000 (100000) | 500000 (100000) |
| | MINIMUM VISCOSITY METAL/METAL GEARS | SSU (CPS) | 500 (100) | 500 (100) | 500 (100) | 500 (100) |
| | MINIMUM VISCOSITY: CERAMIC WEAR PLATES | SSU (CPS) | 500 (100) | 500 (100) | 500 (100) | 500 (100) |
| | MAXIMUM ROTATIONAL SPEED | | 1750 RPM | 1750 RPM | 1750 RPM | 1750 RPM |
| | MAX ROTATIONAL SPEED· METAL/METAL GEARS | | 1450 RPM | 1450 RPM | 1450 RPM | 1450 RPM |
| | INLET PORT SIZE | NPT, BSPT | 1/4 THD | 1/2 THD | 3/4 THD | 1 THD |
| | OUTLET PORT SIZE | NPT, BSPT | 1/4 THD | 1/2 THD | 3/4 THD | 1 THD |
| | ROTATION DIRECTION | | REVERSIBLE | REVERSIBLE | REVERSIBLE | REVERSIBLE |
| | DRIVE SHAFT DIAMETER | INCH (mm) | .375 (9.525) | .375 (9.525) | .500 (12.7) | 500 (12 7) |
| | BEARING TYPE | | INTERNAL SLEEVE | INTERNAL SLEEVE | INTERNAL SLEEVE | INTERNAL SLEEVE |
| | BEARING LUBRICATION | | BY PUMPED FLUID | BY PUMPED FLUID | BY PUMPED FLUID | BY PUMPED FLUID |
| (3) | AVAILABLE SEALING ARRANGEMENTS PACKING | | STD OR LANTERN RING | STD OR LANTERN RING | STD OR LANTERN RING | STD OR LANTERN RING |
| | U-CUP LIP SEAL | | VITON | VITON | VITON | VITON |
| | MECHANICAL SEALS | | SGL,DBL,EXTERNAL SGL | SGL,DBL,EXTERNAL SGL | SGL,DBL,EXTERNAL SGL | SGL,DBL,EXTERNAL SGL |
| | PUMP WEIGHT | LBS (kg) | 4.5 (2.0) | 4.5 (2 0) | 7 (3.2) | 10' (4 5) |

| | PUMP SIZE | | GH8 | GA12 | GA16 |
|---|---|---|---|---|---|
| | MAXIMUM FLOW @ 1750 RPM, 0 PRESSURE | GPM ($M^3$/HR) | 22 0 (5.0) | NA | NA |
| | MAXIMUM FLOW @ 1150 RPM, 0 PRESSURE | GPM ($M^3$/HR) | 14.5 (3.3) | 28.0 (6 4 | 55 0 (12 5) |
| | THEORETICAL DISPLACEMENT | GAL/100 REV (cc/REV) | 1.3687 (51.78) | 2 792 (105 7) | 5.584 (211 4) |
| | MAXIMUM DIFFERENTIAL PRESSURE | PSI (BARS) | 100 (6.9) | 100 (6.9) | 100 (6 9) |
| | MAX DIFF.PRES. METAL/METAL GEARS | PSI (BARS) | 100 (6.9) | 150 (10.3) | 100 (6.9) |
| | MAXIMUM CASING PRESSURE | PSIG (BARS) | 150 (10.3) | 150 (10 3) | 150 (10.3) |
| | TEMPERATURE RANGE · METAL/METAL GEARS | | -100 TO +450 °F | -50 TO +450 °F | -50 TO +450 °F |
| | METAL/CARBON GEARS | | (-73 TO +232 °C) | (-45 TO +232 °C) | (-45 TO +232 °C) |
| | METAL/PEEK GEARS | | | | |
| (1) | METAL/PLASTIC GEARS | | 0 TO +210 °F | 0 TO +210 °F | 0 TO +210 °F |
| | | | (-18 TO +99 °C) | (-18 TO +99 °C) | (-18 TO +99 °C) |
| (2) | MAXIMUM VISCOSITY | SSU (CPS) | 500000 (100000) | 500000 (100000) | 500000 (100000) |
| | MINIMUM VISCOSITY METAL/METAL GEARS | SSU (CPS) | 500 (100) | 500 (100) | 500 (100) |
| | MINIMUM VISCOSITY CERAMIC WEAR PLATES | SSU (CPS) | 500 (100) | 500 (100) | 500 (100) |
| | MAXIMUM ROTATIONAL SPEED | | 1750 RPM | 1150 RPM | 1150 RPM |
| | MAX ROTATIONAL SPEED METAL/METAL GEARS | | 1450 RPM | 1150 RPM | 1150 RPM |
| | INLET PORT SIZE | NPT, BSPT, 150 LB FLG | 1 THD | 1 1/2 THD OR FLG | 2 FLG |
| | OUTLET PORT SIZE | NPT, BSPT, 150 LB FLG | 1 THD | 1 1/2 THD OR FLG | 2 FLG |
| | ROTATION DIRECTION | | REVERSIBLE | REVERSIBLE | REVERSIBLE |
| | DRIVE SHAFT DIAMETER | INCH (mm) | .750 (19 05) | 1 000 (25 4) | 1 000 (25 4) |
| | BEARING TYPE | | INTERNAL SLEEVE | INTERNAL SLEEVE | INTERNAL SLEEVE |
| | BEARING LUBRICATION | | BY PUMPED FLUID | BY PUMPED FLUID | BY PUMPED FLUID |
| (3) | AVAILABLE SEALING ARRANGEMENTS PACKING | | LANTERN RING | LANTERN RING | LANTERN RING |
| | MECHANICAL SEALS | | INTERNAL SGL, DBL | INTERNAL SGL, DBL | INTERNAL SGL, DBL |
| | PUMP WEIGHT | LBS (kg) | 14 (6.3) | 50 (23) | 70 (32) |

NOTES

(1) FOR TEMPERATURES OVER 110 °F TRIMMED PLASTIC GEARS ARE REQUIRED

(2) HIGHER VISCOSITIES REQUIRE REDUCED SPEEDS

(3) THE ISOCHEM SERIES OF PUMPS OFFERS SEALLESS DESIGNS

| | |
|---|---|
| SECTION/PAGE | C/4200 |
| EFFECTIVE | 02/01/96 |
| SUPERSEDES | 1-93 REV F |

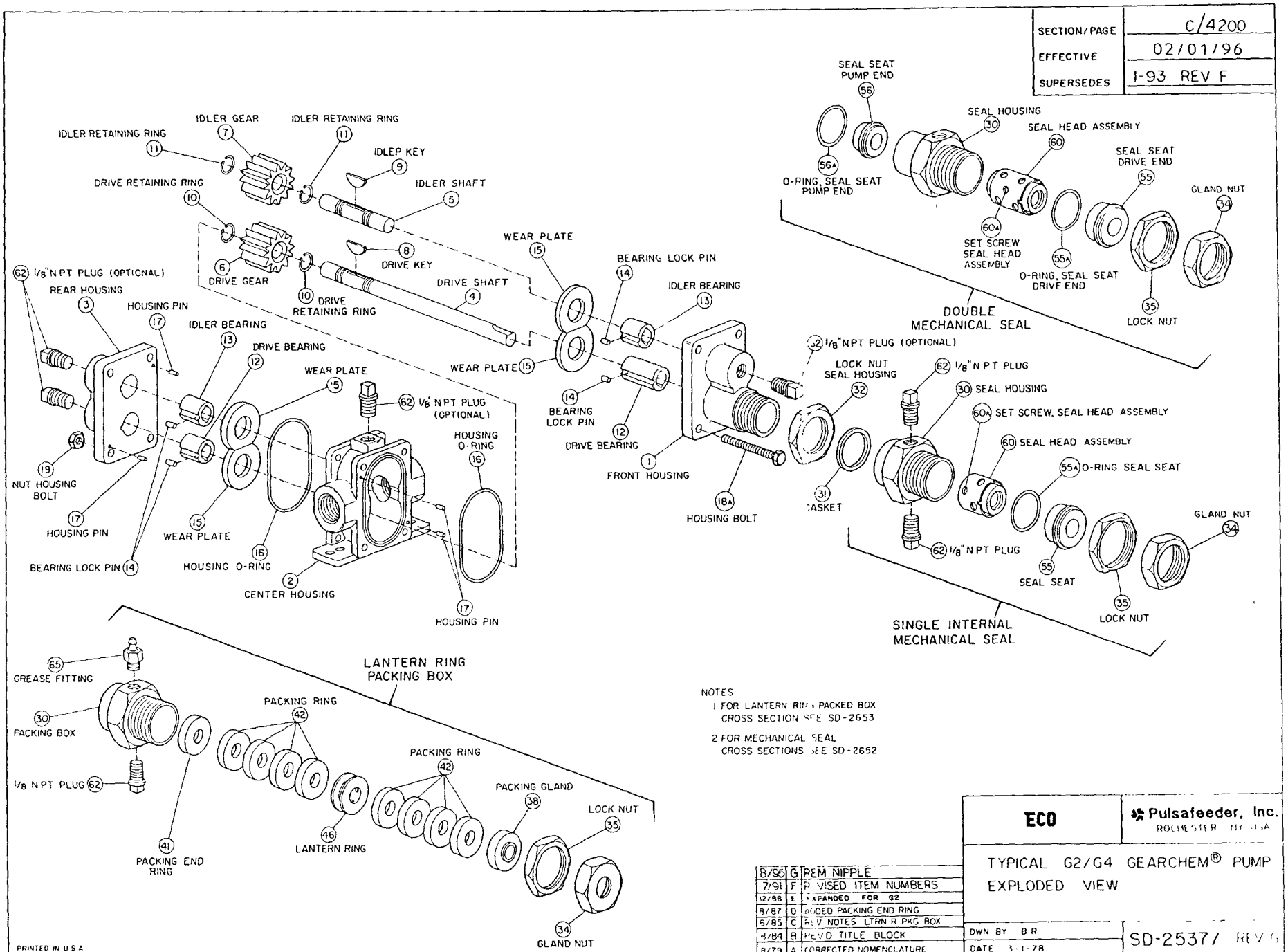


NOTES
1 FOR LANTERN RING PACKED BOX CROSS SECTION SEE SD-2653
2 FOR MECHANICAL SEAL CROSS SECTIONS SEE SD-2652

| | | |
|---|---|---|
| 8/96 | G | PEM NIPPLE |
| 7/91 | F | REVISED ITEM NUMBERS |
| 12/88 | E | EXPANDED FOR G2 |
| 8/87 | D | ADDED PACKING END RING |
| 5/85 | C | REV NOTES LTRN R PKG BOX |
| 3/84 | B | REVD TITLE BLOCK |
| 8/79 | A | CORRECTED NOMENCLATURE |

**ECO**

Pulsafeeder, Inc.
ROCHESTER NY USA

TYPICAL G2/G4 GEARCHEM® PUMP
EXPLODED VIEW

DWN BY B R
DATE 3-1-78

SD-2537/ REV G

PRINTED IN U S A

| | |
|---|---|
| SECTION/PAGE | C / 8200 |
| EFFECTIVE | 02/01/96 |
| SUPERSEDES | 1-93 REV D |

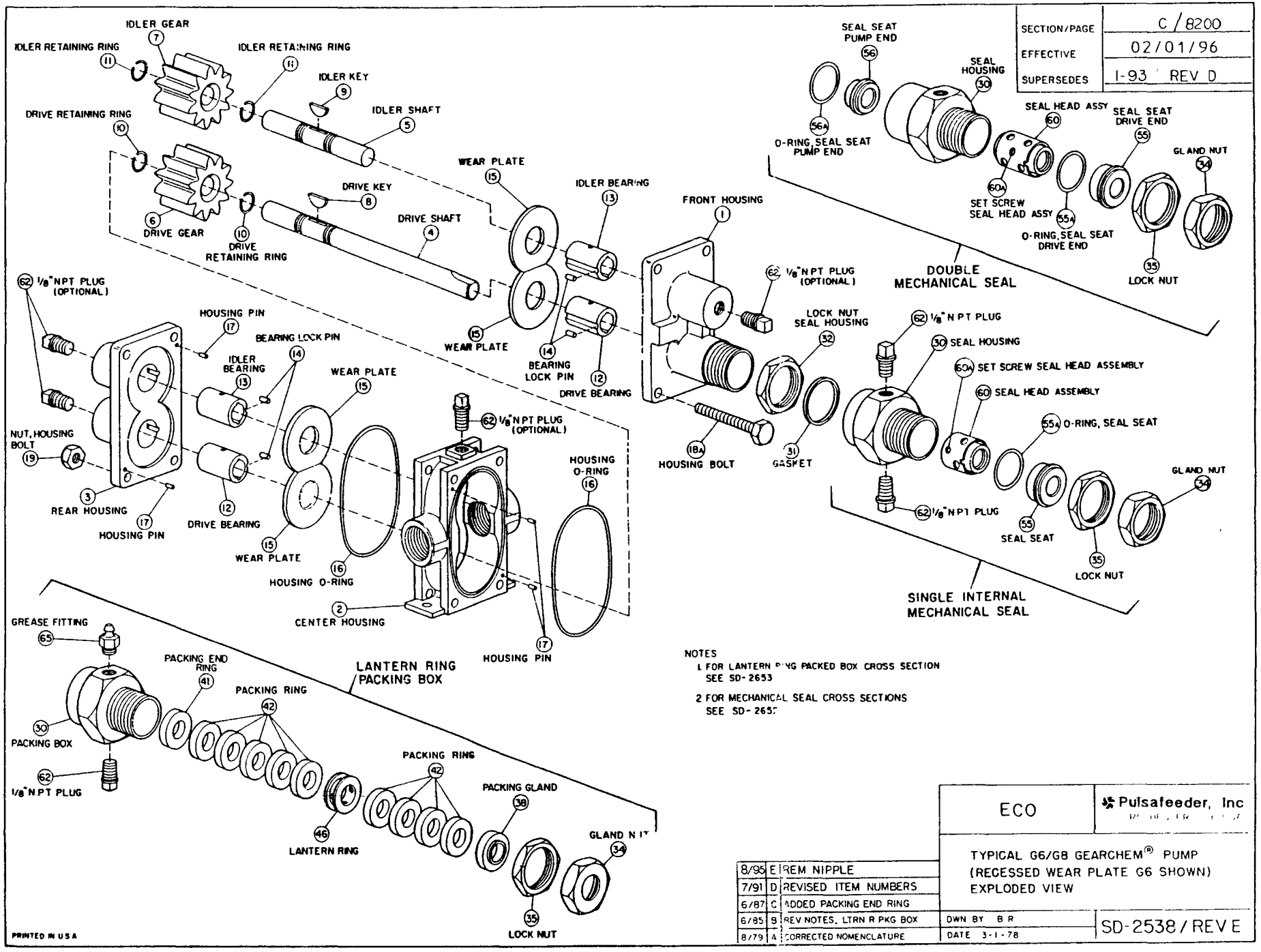


NOTES

1 FOR LANTERN RING PACKED BOX CROSS SECTION SEE SD-2653

2 FOR MECHANICAL SEAL CROSS SECTIONS SEE SD-2657

| | | |
|---|---|---|
| 8/95 | E | REM NIPPLE |
| 7/91 | D | REVISED ITEM NUMBERS |
| 6/87 | C | ADDED PACKING END RING |
| 6/85 | B | REV NOTES, LTRN R PKG BOX |
| 8/79 | A | CORRECTED NOMENCLATURE |

ECO

Pulsafeeder, Inc

TYPICAL G6/G8 GEARCHEM® PUMP (RECESSED WEAR PLATE G6 SHOWN) EXPLODED VIEW

DWN BY B R

DATE 3-1-78

SD-2538 / REV E

PRINTED IN U.S.A.

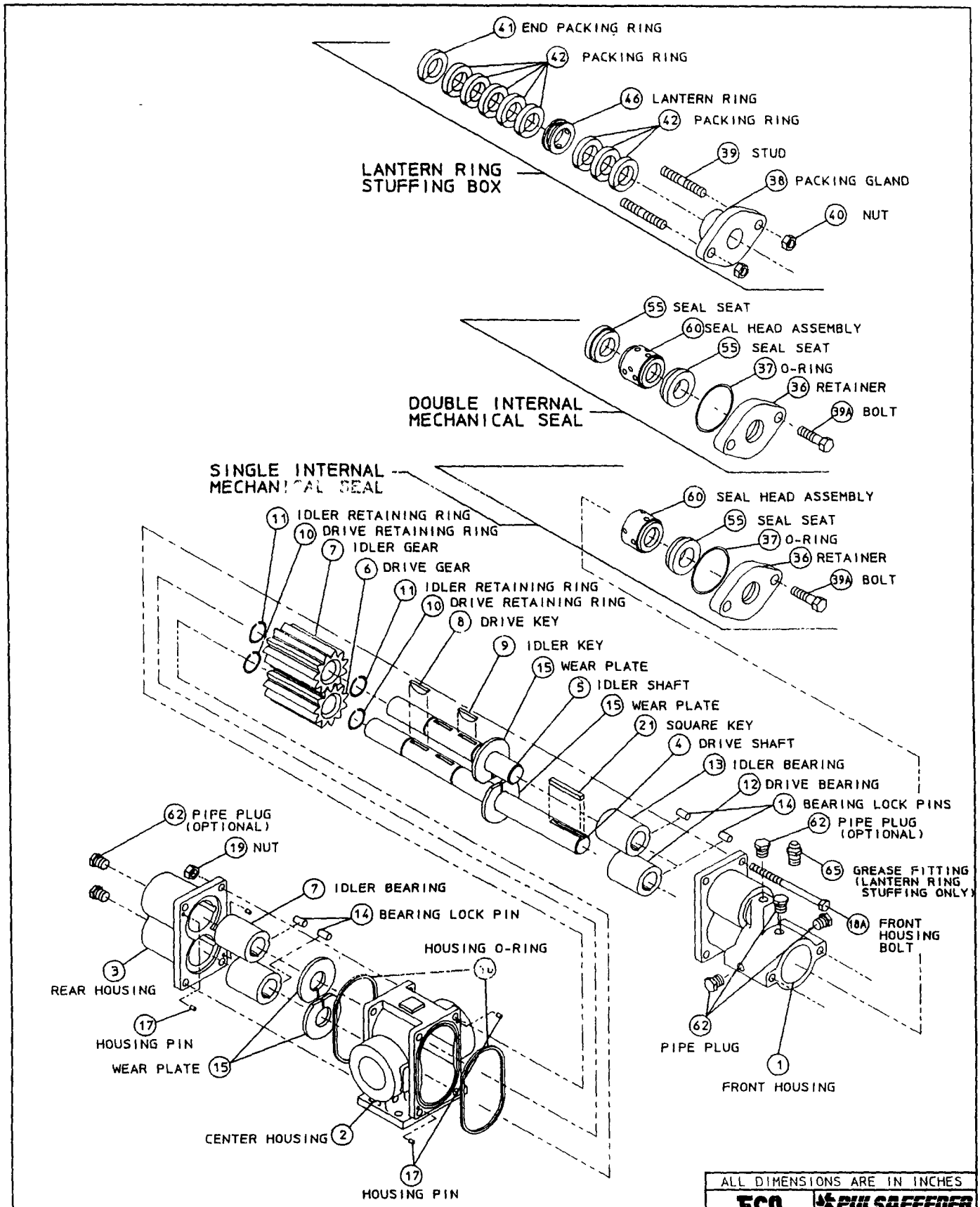


| ALL DIMENSIONS ARE IN INCHES | |
|---|---|
| ECO | PULSAFEEDER A Unit of IDEX Corporation |
| GH8 GEARCHEM PUMP EXPLODED VIEW | |
| DWN BY CLA | SD-2775 |
| DATE 04/04/94 | |

| REF | REVISION UPDATE | DATE |
|---|---|---|
| A | | |

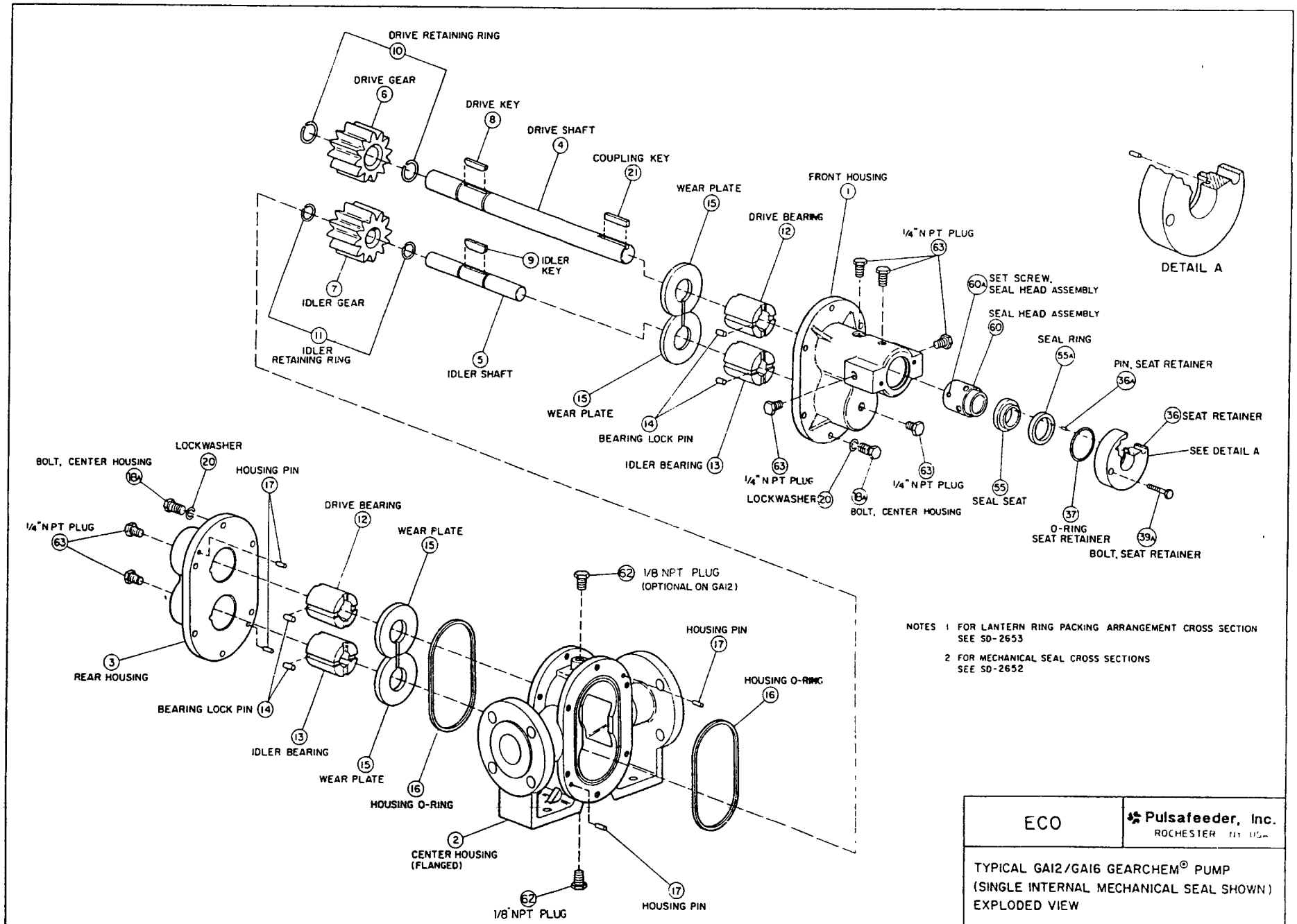


NOTES 1 FOR LANTERN RING PACKING ARRANGEMENT CROSS SECTION SEE SD-2653

2 FOR MECHANICAL SEAL CROSS SECTIONS SEE SD-2652

| | | | |
|---|---|---|---|
| ECO | | Pulsafeeder, Inc. ROCHESTER NY USA | |
| TYPICAL GAI2/GAI6 GEARCHEM® PUMP (SINGLE INTERNAL MECHANICAL SEAL SHOWN) EXPLODED VIEW | | | |
| 7/91 | B | REVISED ITEM NUMBERS | DWN BY B R |
| 6/85 | A | REV NOTES & NOMENCLATURE | DATE 10-1-79 |
| | | | SD-2613 / REV B. |

PRINTED IN U.S.A.

| ITEM | PART NAME |
|---|---|
| 1 | FRONT HOUSING |
| 4 | DRIVE SHAFT |
| 30 | SEAL HOUSING |
| 31 | GASKET |
| 32 | LOCK NUT, HOUSING |
| 34 | GLAND NUT |
| 35 | LOCK NUT |
| 36 | SEAT RETAINER W/PIN |
| 37 | O-RING, SEAT RETAINER |
| 39A | BOLT SEAT RETAINER |
| 55 | SEAL SEAT W/SEAL RING GA12, 16 |
| 55 | SEAL SEAT W/O-RING G2, 4, 6, 8 |
| 59 | PIN, PUMP END SEAT |
| 60 | SEAL HEAD ASSEMBLY |
| 62 | PLUG, 1/8" NPT |
| 63 | PLUG, 1/4" NPT |

| | |
|---|---|
| SECTION / PAGE | C / 4202 |
| EFFECTIVE | 02-01-96 |
| SUPERSEDES | 01-01-95 |

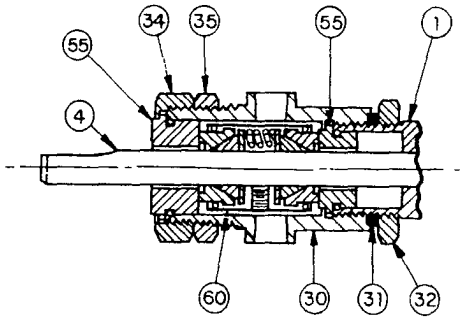


DOUBLE INTERNAL SEAL
**A6, G2, G4, G6, G8**

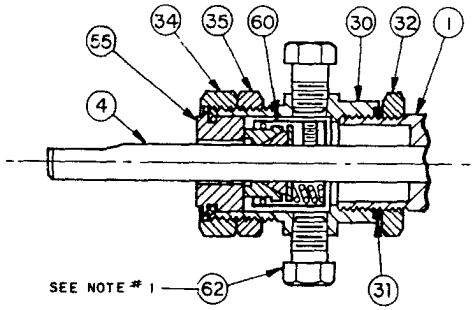


SINGLE INTERNAL SEAL
**A6, G2, G4, G6, G8**

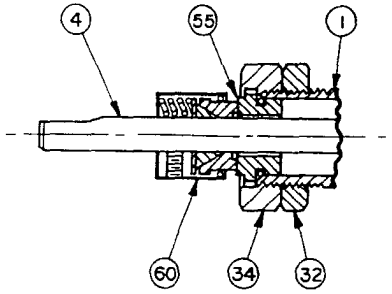


SINGLE EXTERNAL SEAL
**A6, G2, G4, G6, G8**

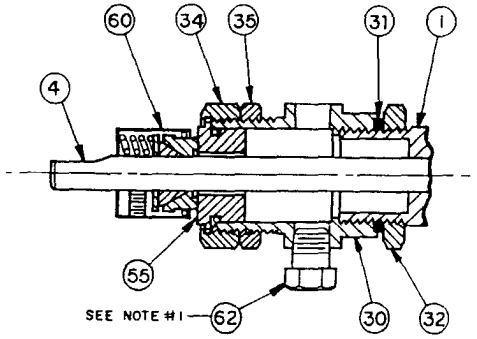


EXTERNAL SEAL FOR VACUUM SERVICE
**G2, G4, G6, G8**

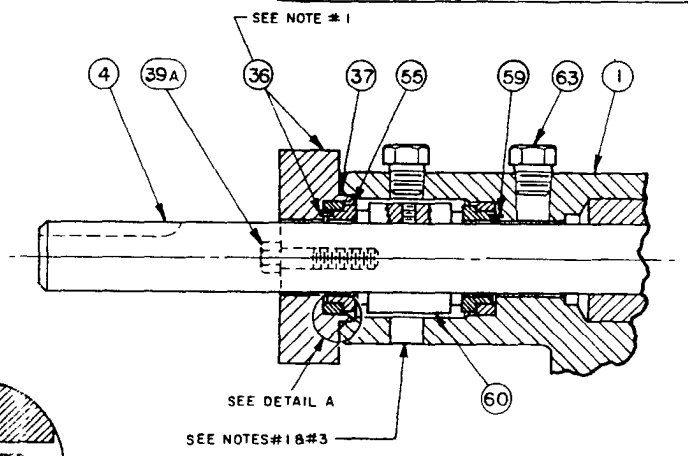


DOUBLE MECHANICAL SEAL
GA12, GA16

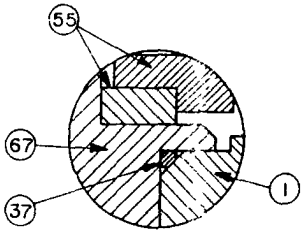


DETAIL A

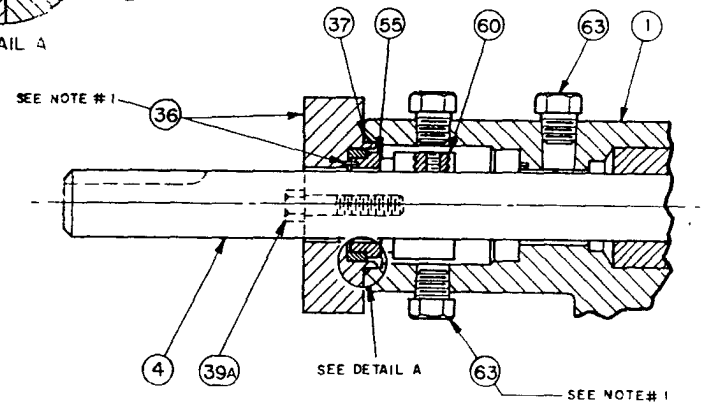


SINGLE MECHANICAL SEAL
GA12, GA16

NOTES. 1 PARTS SHOWN 90° OUT OF POSITION.
2 REFER TO STANDARD SALES BILL OF MATERIAL FOR PART NUMBERS AND QUANTITY.
3. FOR ALL DOUBLE MECHANICAL SEALS, CIRCULATE SUITABLE FLUID AT 25-30 PSI ABOVE PUMP DISCHARGE PRESSURE. FLUID TEMPERATURE & FLOW MUST BE ADEQUATE TO MAINTAIN A MAXIMUM TEMPERATURE OF 160°F IN SEAL HOUSING

| ECO | Pulsafeeder, Inc. ROCHESTER NY USA |
|---|---|
| MECHANICAL SEAL ARRANGEMENTS FOR GEARCHEM/ROTARY PUMPS | |
| DWN BY: KRY | SD-2652 |
| DATE: 6-19-85 | |

| | | |
|---|---|---|
| 8/95 | B | REM NIPPLE |
| 7/91 | A | UPDATED ITEM NUMBERS |

## STANDARD STUFFING BOX

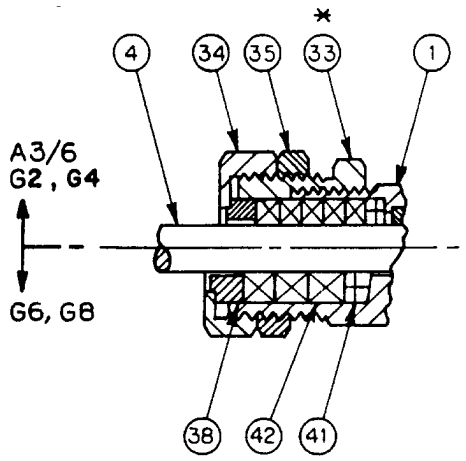


## LANTERN RING STUFFING BOX

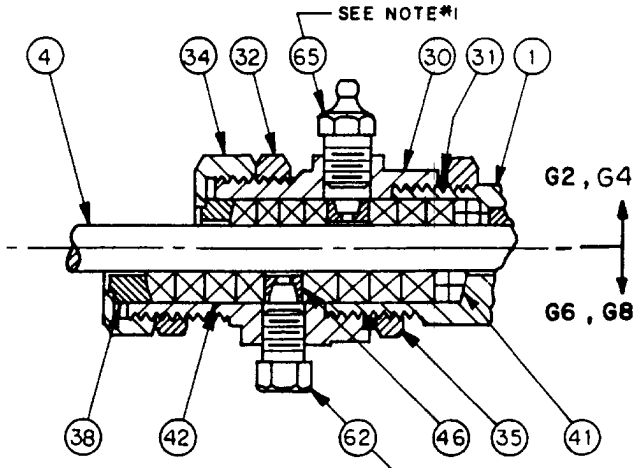


## U-CUP LIP SEAL

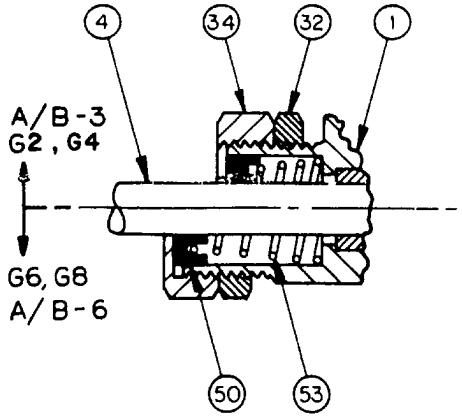


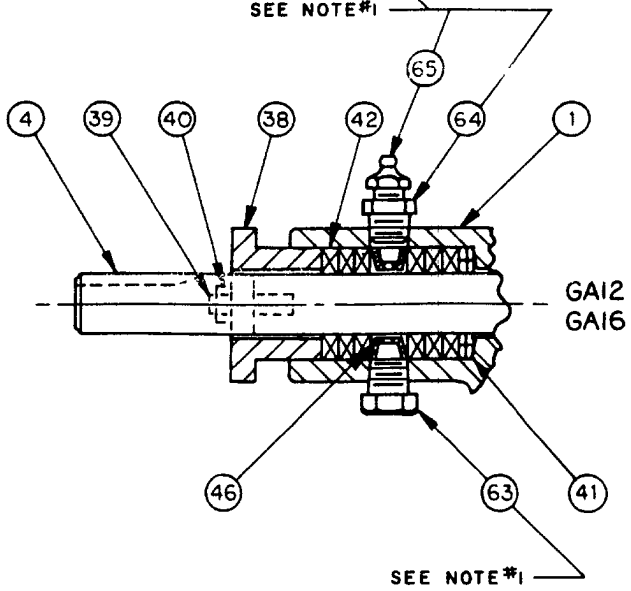


| ITEM | PART NAME |
|---|---|
| 65 | GREASE FITTING |
| 64 | ADAPTOR, 1/4" TO 1/8" NPT |
| 63 | PLUG, 1/4" NPT |
| 62 | PLUG, 1/8" NPT |
| 53 | SPRING, U-CUP |
| 50 | LIP SEAL, U-CUP |
| 46 | LANTERN RING |
| 42 | PACKING RING |
| 41 | PACKING END RING |
| 40 | NUT, STUD |
| 39 | STUD, PACKING GLAND |
| 38 | PACKING GLAND |
| 35 | LOCK NUT |
| 34 | GLAND NUT |
| 33 | HOUSING EXTENSION |
| 32 | LOCK NUT, HOUSING |
| 31 | GASKET |
| 30 | PACKING BOX |
| 4 | DRIVE SHAFT |
| 1 | FRONT HOUSING |

NOTES.

1. PARTS SHOWN 90° OUT OF POSITION
2. *ITEM 33 COMPONENT ONLY A3/6, G2/4
3. REFER TO STANDARD SALES BILL OF MATERIAL FOR PART NUMBERS & QUANTITY

| | | |
|---|---|---|
| 7/91 | C | UPDATED ITEM NUMBERS |
| 7/88 | B | ADDED G2 SERIES |
| 8/87 | A | ADDED PACKING END RING |

ECO

**Pulsafeeder, Inc.**
ROCHESTER, NY USA

PACKING ARRANGEMENTS FOR GEARCHEM/ROTARY PUMPS

| | |
|---|---|
| DWN BY: | KRY |
| DATE: | 6-19-85 |
| REV. | B |

SD-2653

| ITEM | PART NAME |
|---|---|
| 1 | FRONT HOUSING |
| 4 | DRIVE SHAFT |
| 36 | SEAT RETAINER |
| 37 | O RING, SEAT RETAINER |
| 38 | PACKING GLAND |
| 39 | STUD, PACKING GLAND |
| 39A | BOLT, SEAT RETAINER |
| 40 | NUT, STUD |
| 41 | PACKING END RING |
| 42 | PACKING RING |
| 46 | LANTERN RING |
| 55 | SEAT W/SEAL RING |
| 60 | SEAL HEAD ASSEMBLY |
| 62 | PLUG, 1/8" NPT |

NOTES

1 ) REFER TO STANDARD SALES BILL OF MATERIALS

2 ) FOR ALL DOUBLE MECHANICAL SEALS, CIRCULATE SUITABLE FLUID AT 25-30 PSI ABOVE PUMP DISCHARGE PRESSURE FLUID TEMPERATURE AND FLOW MUST BE ADEQUATE TO MAINTAIN A MAXIMUM TEMPERATURE OF 160° IN SEAL HOUSING

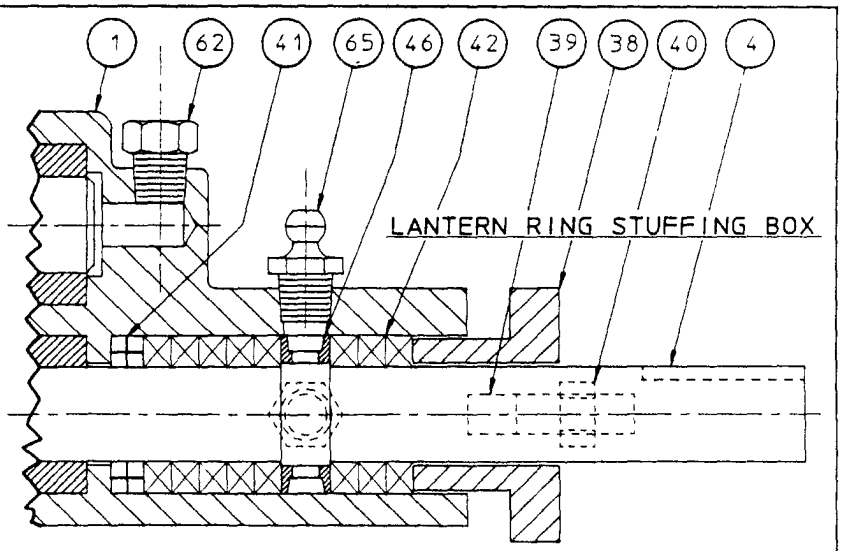


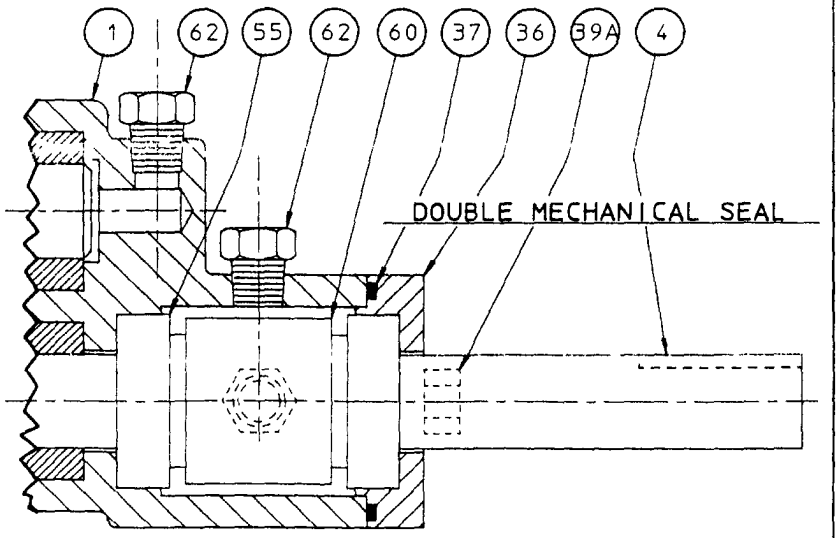


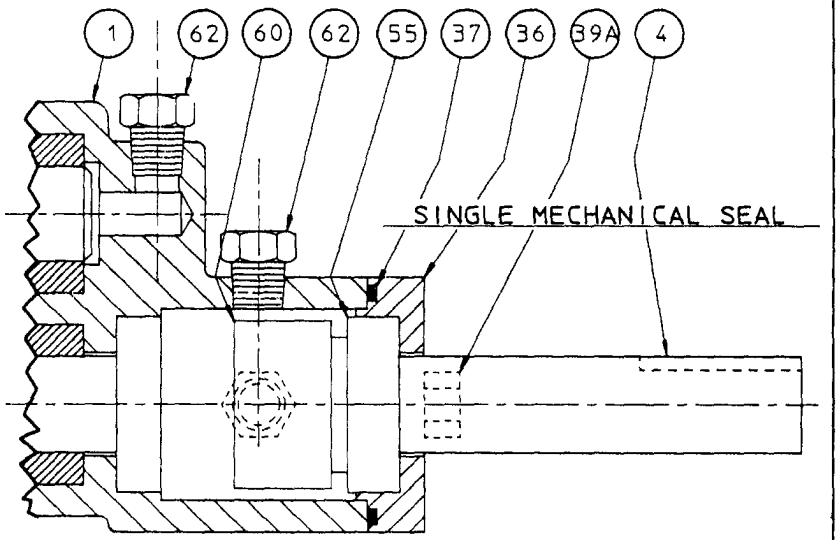


ALL DIMENSIONS ARE IN INCHES

ECO | PULSAFEEDER A Unit of IDEX Corporation

GH8 GEARCHEM PUMP
SEAL ARRANGEMENTS
CROSS SECTIONAL VIEWS

| SECTION/PAGE | C/GH8-8211 |
|---|---|
| EFFECTIVE | 02/01/96 |
| SUPERSEDES | 12/02/94 |

| REF | REVISION UPDATE | DATE |
|---|---|---|
| A | DRAWING UPDATE | 10/23/95 |

DWN BY CLA
DATE 04/04/94

SD-2778

## GEARCHEM PUMP

## SIGNIFICANT MODEL NUMBER SYSTEM AND AVAILABILITY TABLE

| | | | | | | | | | |
|---|---|---|---|---|---|---|---|---|---|
| G2, G4, G6, G8, GH8 | G | ☐ | ☐ | ☐ | ☐ | ☐ | ☐ | ☐ | ☐ |
| GA12, GA16 | GA | ☐ | ☐ | ☐ | ☐ | ☐ | ☐ | ☐ | ☐ |
| POSITION NO | 1 | 2 | 3 | 4 | 5 | 6 | 7 | 8 | 9 |

| POSITION 1 SERIES G - GEARCHEM® EXTERNAL SPUR GEAR PUMP | | | | | | | | |
|---|---|---|---|---|---|---|---|---|
| POSITION 2 PUMP SIZE | 2 | 4 | 6 | 8 | H8 | 12 | 16 |
| Port Size | 25" | 50" | 75" | 1.00" | 1.00" | 1.50" | 2.00" |
| Capacity (GPM MAX) | 1.5 | 3 | 10 | 20 | 20 | 26 | 55 |
| Discharge pressure (PSIG MAX) | 100 | 100 | 100 | 50 | 100 | 100 | 100 |
| POSITION 3 AVAILABLE PUMP METALLURGIES AND TYPE PORT CONNECTION | | | | | | | |
| A - 316SS FNPT | X | X | X | X | X | X | |
| C - ALLOY C FNPT | X | X | X | X | X | X | |
| D - ALLOY 20 FNPT | X | X | X | X | X | X | |
| K - 316SS FBSPT | X | X | X | X | X | X | |
| M - ALLOY C FBSPT | X | X | X | X | X | X | |
| N - ALLOY 20 FBSPT | X | X | X | X | X | X | |
| U - 316SS FLANGED | | | | | | X | X |
| V - ALLOY C FLANGED | | | | | | X | X |
| W - ALLOY 20 FLANGED | | | | | | X | X |
| POSITION 4 DRIVE GEAR MATERIAL | | | | | | | |
| C - ALLOY C | X | X | X | X | X | X | X |
| D - ALLOY 20 | X | X | X | X | | | |
| T - TFE (Glass Filled) (1) | X | X | X | X | | | |
| E - PEEK (1) | X | X | X | X | | | |
| POSITION 5 IDLER GEAR MATERIAL | | | | | | | |
| C - ALLOY C (2) | X | X | X | X | X | X | X |
| D - ALLOY 20 (2) | X | X | X | X | X | | |
| K - Carbon | X | X | X | X | X | X | X |
| T - TFE (Glass Filled) | X | X | X | X | X | X | X |
| E - PEEK | X | X | X | X | X | X | X |
| POSITION 6 WEAR PLATE MATERIAL | | | | | | | |
| K - Carbon | X | X | X | X | X | X | X |
| T - TFE (Glass Filled) | X | X | X | X | X | X | X |
| 7 - Ceramic (3) | X | X | X | X | X | X | X |
| E - Peek | X | X | X | X | X | | |
| POSITION 7 BEARING MATERIAL | | | | | | | |
| K - Carbon | X | X | X | X | X | X | X |
| T - TFE (Glass Filled) | X | X | X | X | X | X | X |
| 4 - Carbon - Slotted | | | | | | X | X |
| POSITION 8 SEAL ARRANGEMENT | | | | | | | |
| STANDARD STUFFING BOX | | | | | | | |
| B - Split TFE Rings | X | X | X | X | | | |
| G - Grafoil(®) Rings | X | X | X | X | | | |
| U-CUP LIP SEAL | | | | | | | |
| J - Viton Lip Seal, H-C Spring (4) | X | X | X | X | | | |
| LANTERN RING STUFFING BOX | | | | | | | |
| N - Split TFE Rings | X | X | X | X | | | |
| R - Grafoil (®) Rings | X | X | X | X | | | |
| 13 - Braided TFE Rings | | | | | X | X | X |
| 15 - Grafoil (®) Rings | | | | | X | X | X |
| MECHANICAL SEALS (5) | | | | | | | |
| K - Internal Seal TFE Face, MTLC Seat | X | X | X | X | | | |
| Q - Internal Seal TFE Face, Silicon CBD Seat | X | X | X | X | X | | |
| T - Internal Seal CBN Face, MTLC Seat | X | X | X | X | | | |
| U - Internal Seal CBN Face, Silicon CBD Seat | X | X | X | X | X | | |
| V - External Seal CBN Face, MTLC Seat | X | X | X | X | | | |
| W - External Seal CBN Face, Silicon CBD Seat | | | X | X | | | |
| Y - Double Seal (6) CBN Face, MTLC Seat | X | X | X | X | | | |
| Z - External Seal for Vacuum Service CBN Face, MTLC Seat | X | X | X | X | | | |
| 22 - Internal Seal CBN Face, Ceramic Seat | | | | | | X | X |
| 24 - Internal Seal CBN Face, MTLC Seat | | | | | | X | X |
| 42 - Double Seal (6) CBN Face, Ceramic Seat | | | | | | X | X |
| 44 - Double Seal (6) CBN Face, MTLC Seat | | | | | | X | X |
| E - Double Seal (6) CBN Face, Silicon CBD Seat | | | | | X | | |

## GEARCHEM PUMP

## SIGNIFICANT MODEL NUMBER SYSTEM AND AVAILABILITY TABLE

(CONTINUED)

| PUMP SIZE | 2 | 4 | 6 | 8 | H8 | 12 (7) | 16 (7) |
|---|---|---|---|---|---|---|---|
| POSITION 9 OPTIONS | | | | | | | |
| A - Bearing Flush Ports | X | X | X | X | X | STD | STD |
| B - PFA Coated, SS Hsg O-Rings, Metallic Bearing Lock Pins | X | X | X | X | X | X | X |
| C - Bearing Flush Ports, PFA Coated, SS Hsg O-Rings, Metallic Bearing Lock Pins | X | X | X | X | X | | |
| D - Bearing Flush Ports, PFA Coated, SS Hsg O-Rings, Metallic Bearing Lock Pins, Slotted Bearings (8) | X | X | X | X | X | | |
| E - Bearing Flush Ports, PFA Coated, SS Hsg O-Rings, Metallic Bearing Lock Pins, Slotted Bearings, (8) Slotted Wear Plates (9) | X | X | X | X | | | |
| J - GA12 with 1" Idler Shaft, (10) (Metallic Gear Only) | | | | | | X | |
| N - Narrow Width Gears (11) | | X | X | | | | |
| T - Temperature Trimmed Plastic Gear | X | X | X | X | X | X | X |
| V - Center Hsg - Vent | X | X | X | X | X | X | STD |
| X - Special (12) | X | X | X | X | X | X | X |

NOTES

(1) Maximum differential pressure allowed for plastic/plastic gears is 50 PSIG

(2) Pumps with metallic drive and idler gears require minimum viscosity of 100 cps and are limited to 1440 RPM maximum speed for G2-H8 pumps and 1150 RPM for GA12-16 pumps

(3) Ceramic wear plates with metallic gears require minimum viscosity of 100 cps

(4) Viton U-Cup lip seals are limited to 1150 RPM maximum speed

(5) Not all mechanical seals available in all metallurgies

(6) Double mechanical seals must be pressurized with seal fluid 15 to 20 PSIG above the pump discharge pressure

(7) Standard GA12 and GA16 pumps furnished with bearing flush ports, metallic bearing lock pins, and slotted wear plates

(8) Slotted bearings (GA12 and GA16) listed POSITION 7

(9) Slotted wear plates reduce volumetric efficiency

(10) J OPTION available only with metal idler gear

(11) Designation for reduced capacity pump

(12) Consult Factory

(13) Specifications and availability subject to change without notice

(*) Registered Trademark

# G2 SERIES PUMP
# CONSOLIDATED B/M

| | | | STANDARD PUMP MATERIAL | | | | | | |
|---|---|---|---|---|---|---|---|---|---|
| | | | 316SS (A) OR (K) | | ALLOY C (C) OR (M) | | ALLOY 20 (D) OR (N) | | |
| DESCRIPTION | | QTY | PART NO | MATL | PART NO | MATL | PART NO | MATL | ITEM |
| POSITION 3 STANDARD PUMP - NON-VARIABLE COMPONENTS | | | | | | | | | |
| HOUSING, FRONT | | 1 | 70109 | 316SS | 70110 | ALLOY C | 70111 | ALLOY 20 | 1 |
| HOUSING, FRONT - | LIP SEAL | 1 | 70145 | 316SS | 70146 | ALLOY C | 70147 | ALLOY 20 | 1 |
| HOUSING, CENTER | FNPT | 1 | 70026 | 316SS | 70027 | ALLOY C | 70028 | ALLOY 20 | 2 |
| HOUSING, CENTER | FBSPT | 1 | 70029 | 316SS | 70030 | ALLOY C | 70031 | ALLOY 20 | 2 |
| HOUSING, REAR | | 1 | 70214 | 316SS | 70215 | ALLOY C | 70216 | ALLOY 20 | 3 |
| •SHAFT, DRIVE | | 1 | 70372 | 316SS | 70373 | ALLOY C | 70374 | ALLOY 20 | 4 |
| •SHAFT IDLER | | 1 | 70378 | 316SS | 70379 | ALLOY C | 70380 | ALLOY 20 | 5 |
| •RING, RETAINING | | 4 | 76702 | ALLOY 20 | 76701 | ALLOY C | 76702 | ALLOY 20 | 10 11 |
| •KEY, METAL DRIVE GEAR | | *1 | 71910 | ALLOY 20 | 71911 | ALLOY C | 71910 | ALLOY 20 | 8 |
| •KEY, PLASTIC DRIVE GEAR | | *1 | 71916 | ALLOY 20 | 71917 | ALLOY C | 71916 | ALLOY 20 | 8 |
| •KEY, MTL/CBN IDLER GEAR | | *1 | 71910 | ALLOY 20 | 71911 | ALLOY C | 71910 | ALLOY 20 | 9 |
| •KEY, PLASTIC IDLER GEAR | | *1 | 71916 | ALLOY 20 | 71917 | ALLOY C | 71916 | ALLOY 20 | 9 |
| •PIN, BEARING LOCK | | 4 | 41801 | TFE | 41801 | TFE | 41801 | TFE | 14 |
| •O-RING, HOUSING | | 2 | 61101 | TFE | 61101 | TFE | 61101 | TFE | 16 |
| PIN, HOUSING | | 4 | 40801 | 316SS | 40801 | 316SS | 40801 | 316SS | 17 |
| BOLT, HOUSING | | 4 | 72006 | 188SS | 72006 | 188SS | 72006 | 188SS | 18A |
| NUT, HOUSING BOLT | | 4 | 72101 | 188SS | 72101 | 188SS | 72101 | 188SS | 19 |
| NAMEPLATE | | 1 | 41201 | 188SS | 41201 | 188SS | 41201 | 188SS | -- |
| NON-VARIABLE COMPONENTS FOR POSITION 9 OPTIONAL PUMPS | | | | | | | | | |
| POSITION 9 OPTIONS - DELETE CORRESPONDING STANDARD PUMP COMPONENT FROM B/M | | | | | | | | | |
| | V | HOUSING, CENTER - VENT FNPT | 1 | 70026-2 | 316SS | 70027-2 | ALLOY C | 70028-2 | ALLOY 20 | 2 |
| | V | HOUSING CENTER - VENT FBSPT | 1 | 70029-2 | 316SS | 70030-2 | ALLOY C | 70031-2 | ALLOY 20 | 2 |
| | V | PLUG, 1/8" NPT | *1 | W772565-316 | 316SS | 52301 | ALLOY C | 52300 | ALLOY 20 | 62 |
| | A | HOUSING, FRONT - BRG FLUSH | 1 | 70115 | 316SS | 70117 | ALLOY C | 70123 | ALLOY 20 | 1 |
| | A | HOUSING, FRONT-BRG FLUSH LIP SEAL | 1 | 70148 | 316SS | 70149 | ALLOY C | 70150 | ALLOY 20 | 1 |
| | A | HOUSING, REAR - BRG FLUSH | 1 | 70212 | 316SS | 70234 | ALLOY C | 70233 | ALLOY 20 | 3 |
| C | A | PLUG, 1/8" NPT | *3 | W772565-316 | 316SS | 52301 | ALLOY C | 52300 | ALLOY 20 | 62 |
| C | B | •PIN, BEARING LOCK | 4 | 41802 | ALLOY 20 | 41806 | ALLOY C | 41802 | ALLOY 20 | 14 |
| C | B | •O-RING, HOUSING | 2 | 61104 | SS/PFA | 61104 | SS/PFA | 61104 | SS/PFA | 16 |
| D | | •BEARING SLOTTED | 5 | 70419 | CARBON | 70419 | CARBON | 70419 | CARBON | 12 13 |
| E | | •WEAR PLATE, SLOTTED | 4 | 70526 | CARBON | 70526 | CARBON | 70526 | CARBON | 15 |
| POSITION 4 & 5 DRIVE AND IDLER GEAR | | | | | | | | | | |
| C | | •GEAR, DRIVE/IDLER | 1-2 | 70672 | ALLOY C | 70672 | ALLOY C | 70672 | ALLOY C | 6,7 |
| D | | •GEAR, DRIVE/IDLER | 1-2 | 70673 | ALLOY 20 | --- | --- | 70673 | ALLOY 20 | 6,7 |
| K | | •GEAR, IDLER | 1 | 70674 | CARBON | 70674 | CARBON | 70674 | CARBON | 7 |
| T | | •GEAR, DRIVE/IDLER | 1-2 | 70675 | TFE(GF) | 70675 | TFE(GF) | 70675 | TFE(GF) | 6,7 |
| E | | •GEAR, DRIVE/IDLER | 1-2 | 70676 | PEEK | 70676 | PEEK | 70676 | PEEK | 6 7 |
| POSITION 6 WEAR PLATE MATERIAL | | | | | | | | | | |
| K | | •WEAR PLATE | 4 | 70523 | CARBON | 70523 | CARBON | 70523 | CARBON | 15 |
| T | | •WEAR PLATE | 4 | 70524 | TFE(GF) | 70524 | TFE(GF) | 70524 | TFE(GF) | 15 |
| Z | | •WEAR PLATE | 4 | 70525 | CERAMIC | 70525 | CERAMIC | 70525 | CERAMIC | 15 |
| E | | •WEAR PLATE | 4 | 70534 | PEEK | 70534 | PEEK | 70534 | PEEK | 15 |
| POSITION 7 BEARING MATERIAL | | | | | | | | | | |
| K | | •BEARING | 5 | 70404 | CARBON | 70404 | CARBON | 70404 | CARBON | 12 13 |
| T | | •BEARING | 1 | 70401 | TFE(GF) | 70401 | TFE(GF) | 70401 | TFE(GF) | 12 |
| T | | •BEARING | 3 | 70402 | TFE(GF) | 70402 | TFE(GF) | 70402 | TFE(GF) | 12,13 |

*COMPONENT QUANTITY MAY BE CUMULATIVE OVER ENTIRE B/M
•DENOTES RECOMMENDED SPARE PART

# G2 SERIES PUMP
# CONSOLIDATED B/M

| | | | STANDARD PUMP MATERIAL | | | | | | |
|---|---|---|---|---|---|---|---|---|---|
| | | | 316SS (A) OR (K) | | ALLOY C (C) OR (M) | | ALLOY 20 (D) OR (N) | | |
| DESCRIPTION | | QTY | PART NO | MATL | PART NO | MATL | PART NO | MATL | ITEM |
| POSITION 8 SEAL ARRANGEMENT | | | | | | | | | |
| STANDARD STUFFING BOX | | | | | | | | | |
| COMMON PARTS | GLAND NUT | 1 | 11710 | ALLOY 20 | 11709 | ALLOY C | 11710 | ALLOY 20 | 34 |
| | LOCK NUT | 1 | 21602 | 316SS | 21602 | 316SS | 21602 | 316SS | 35 |
| | HOUSING EXTENSION | 1 | 14503 | ALLOY 20 | 74501 | ALLOY C | 14503 | ALLOY 20 | 33 |
| | PACKING GLAND | 1 | 71506 | ALLOY 20 | 71504 | ALLOY C | 71506 | ALLOY 20 | 38 |
| B | *PACKING RING | 5 | 62608 | TFE(BRD) | 62608 | TFE(BRD) | 62608 | TFE(BRD) | 42 |
| | *PACKING END RING | 1 | 62702 | TFE(GF) | 62702 | TFE(GF) | 62702 | TFE(GF) | 41 |
| G | *PACKING RING | 6 | 62606 | GRAFOIL | 62606 | GRAFOIL | 62606 | GRAFOIL | 42 |
| U-CUP LIP SEAL | | | | | | | | | |
| COMMON PARTS | LOCK NUT, HOUSING | 1 | 11603 | 316SS | 11603 | 316SS | 11603 | 316SS | 32 |
| | GLAND NUT | 1 | 11724 | ALLOY 20 | 11728 | ALLOY C | 11724 | ALLOY 20 | 34 |
| J | *LIP SEAL | 1 | 71402 | VITON | 71402 | VITON | 71402 | VITON | 50 |
| | SPRING, LIP SEAL | 1 | 11206 | ALLOY C | 11706 | ALLOY C | 11206 | ALLOY C | 53 |
| LANTERN RING STUFFING BOX | | | | | | | | | |
| COMMON PARTS | PACKING BOX | 1 | 74504 | ALLOY 20 | 74503 | ALLOY C | 74504 | ALLOY 20 | 30 |
| | GASKET | 1 | 71101 | TFE | 71101 | TFE | 71101 | TFE | 31 |
| | LOCK NUT, HOUSING | 1 | 11603 | 316SS | 11603 | 316SS | 11603 | 316SS | 32 |
| | GLAND NUT | 1 | 11710 | ALLOY 20 | 11709 | ALLOY C | 11710 | ALLOY 20 | 34 |
| | LOCK NUT | 1 | 21602 | 316SS | 21602 | 316SS | 21602 | 316SS | 35 |
| | LANTERN RING | 1 | 77113 | TFE | 77113 | TFE | 77113 | TFE | 46 |
| | PACKING GLAND | 1 | 71506 | ALLOY 20 | 71504 | ALLOY C | 71506 | ALLOY 20 | 38 |
| | GREASE FITTING | 1 | 27201 | 310SS | 27201 | 310SS | 27201 | 310SS | 65 |
| | PLUG, 1/8" NPT | *1 | W772565-316 | 316SS | 52301 | ALLOY C | 52300 | ALLOY 20 | 62 |
| N | *PACKING RING | 8 | 62608 | TFE(BRD) | 62608 | TFE(BRD) | 62608 | TFE(BRD) | 42 |
| | *PACKING END RING | 1 | 62702 | TFE(GF) | 62702 | TFE(GF) | 62702 | TFE(GF) | 41 |
| R | *PACKING RING | 9 | 62606 | GRAFOIL | 62606 | GRAFOIL | 62606 | GRAFOIL | 42 |
| INTERNAL MECHANICAL SEAL | | | | | | | | | |
| COMMON PARTS | SEAL HOUSING | 1 | 74509 | ALLOY 20 | 74510 | ALLOY C | 74509 | ALLOY 20 | 30 |
| | GASKET | 1 | 71101 | TFE | 71101 | TFE | 71101 | TFE | 31 |
| | LOCK NUT, HOUSING | 1 | 11603 | 316SS | 11603 | 316SS | 11603 | 316SS | 32 |
| | GLAND NUT | 1 | 21727 | ALLOY 20 | 21726 | ALLOY C | 21727 | ALLOY 20 | 34 |
| | LOCK NUT | 1 | 21602 | 316SS | 21602 | 316SS | 21602 | 316SS | 35 |
| | PLUG, 1/8" NPT | *2 | W772565-316 | 316SS | 52301 | ALLOY C | 52300 | ALLOY 20 | 62 |
| K | *SEAL HEAD ASSEMBLY | 1 | 77033 | 020/TFE | 77034 | HC0/TFE | 77033 | 020/TFE | 60 |
| | *SEAL SEAT W/ O-RING (TFE) | 1 | 71551 | ALLOY 20 | 71553 | ALLOY C | 71551 | ALLOY 20 | 55 |
| Q | *SEAL HEAD ASSEMBLY | 1 | 77033 | 020/TFE | 77034 | HC0/TFE | 77033 | 020/TFE | 60 |
| | *SEAL SEAT W/ O-RING (TFE) | 1 | 71557 | SICBD | 71557 | SICBD | 71557 | SICBD | 55 |
| T | *SEAL HEAD ASSEMBLY | 1 | 77036 | 020/CBN | 77037 | HC0/CBN | 77036 | 020/CBN | 60 |
| | *SEAL SEAT W/ O-RING (TFE) | 1 | 71551 | ALLOY 20 | 71553 | ALLOY C | 71551 | ALLOY 20 | 55 |
| U | *SEAL HEAD ASSEMBLY | 1 | 77033 | 020/CBN | 77037 | HC0/CBN | 77036 | 020/CBN | 60 |
| | *SEAL SEAT W/ O-RING (TFE) | 1 | 71557 | SICBD | 71557 | SICBD | 71557 | SICBD | 55 |

*COMPONENT QUANTITY MAY BE CUMULATIVE OVER ENTIRE B/M
+DENOTES RECOMMENDED SPARE PART

# G2 SERIES PUMP
# CONSOLIDATED B/M

| | | | STANDARD PUMP MATERIAL | | | | | | |
|---|---|---|---|---|---|---|---|---|---|
| | | | 316SS (A) OR (K) | | ALLOY C (C) OR (M) | | ALLOY 20 (D) OR (N) | | |
| DESCRIPTION | | QTY | PART NO | MATL | PART NO | MATL | PART NO | MATL | ITEM |
| POSITION 8 SEAL ARRANGEMENT (CONT'D) | | | | | | | | | |
| EXTERNAL MECHANICAL SEAL | | | | | | | | | |
| COMMON PARTS | GLAND NUT | 1 | 11719 | ALLOY 20 | 11716 | ALLOY C | 11719 | ALLOY 20 | 34 |
| | LOCK NUT, HOUSING | 1 | 11603 | 316SS | 11603 | 316SS | 11603 | 316SS | 32 |
| V | +SEAL HEAD ASSEMBLY | 1 | 77036 | 020/CBN | 77037 | HC0/CBN | 77036 | 020/CBN | 60 |
| | +SEAL SEAT W/ O-RING (TFE) | 1 | 71554 | ALLOY 20 | 71556 | ALLOY C | 71554 | ALLOY 20 | 55 |
| DOUBLE MECHANICAL SEAL | | | | | | | | | |
| COMMON PARTS | SEAL HOUSING | 1 | 74523 | ALLOY 20 | 74519 | ALLOY C | 74523 | ALLOY 20 | 30 |
| | GASKET | 1 | 71101 | TFE | 71101 | TFE | 71101 | TFE | 31 |
| | LOCK NUT, HOUSING | 1 | 11603 | 316SS | 11603 | 316SS | 11603 | 316SS | 32 |
| | GLAND NUT | 1 | 21727 | ALLOY 20 | 21726 | ALLOY C | 21727 | ALLOY 20 | 34 |
| | LOCK NUT | 1 | 21602 | 316SS | 21602 | 316SS | 21602 | 316SS | 35 |
| | +SEAL HEAD ASSEMBLY | 1 | 77051 | 316/CBN | 77051 | 316/CBN | 77051 | 316/CBN | 60 |
| Y | +SEAL SEAT W/ O-RING (TFE) DR | 1 | 71551 | ALLOY 20 | 71553 | ALLOY C | 71551 | ALLOY 20 | 55 |
| | +SEAL SEAT W/ O-RING (TFE) PUMP | 1 | 71554 | ALLOY 20 | 71556 | ALLOY C | 71554 | ALLOY 20 | 56 |
| EXTERNAL MECHANICAL SEAL FOR VACUUM SERVICE | | | | | | | | | |
| COMMON PARTS | SEAL HOUSING | 1 | 74509 | ALLOY 20 | 74510 | ALLOY C | 74509 | ALLOY 20 | 30 |
| | GASKET | 1 | 71101 | TFE | 71101 | TFE | 71101 | TFE | 31 |
| | LOCK NUT, HOUSING | 1 | 11603 | 316SS | 11603 | 316SS | 11603 | 316SS | 32 |
| | GLAND NUT | 1 | 21727 | ALLOY 20 | 21726 | ALLOY C | 21727 | ALLOY 20 | 34 |
| | LOCK NUT | 1 | 21602 | 316SS | 21602 | 316SS | 21602 | 316SS | 35 |
| | PLUG, 1/8" NPT | *1 | W772565-316 | 316SS | 52301 | ALLOY C | 52300 | ALLOY 20 | 62 |
| Z | +SEAL HEAD ASSEMBLY | 1 | 77036 | 020/CBN | 77037 | HC0/CBN | 77036 | 020/CBN | 60 |
| | +SEAL SEAT W/ O-RING (TFE) | 1 | 71551 | ALLOY 20 | 71553 | ALLOY C | 71551 | ALLOY 20 | 55 |

*COMPONENT QUANTITY MAY BE CUMULATIVE OVER ENTIRE B/M
+DENOTES RECOMMENDED SPARE PART

# G4 SERIES PUMP
# CONSOLIDATED B/M

| DESCRIPTION | QTY | STANDARD PUMP MATERIAL: 316SS (A) OR (K) PART NO | MATL | ALLOY C (C) OR (M) PART NO | MATL | ALLOY 20 (D) OR (N) PART NO | MATL | ITEM |
|---|---|---|---|---|---|---|---|---|
| POSITION 3 STANDARD PUMP - NON-VARIABLE COMPONENTS | | | | | | | | |
| HOUSING, FRONT | 1 | 70109 | 316SS | 70110 | ALLOY C | 70111 | ALLOY 20 | 1 |
| HOUSING FRONT - LIP SEAL | 1 | 70145 | 316SS | 70146 | ALLOY C | 70147 | ALLOY 20 | 1 |
| HOUSING CENTER FNPT | 1 | 70014 | 316SS | 70016 | ALLOY C | 70015 | ALLOY 20 | 2 |
| HOUSING, CENTER FBSPT | 1 | 70020 | 316SS | 70022 | ALLOY C | 70021 | ALLOY 20 | 2 |
| HOUSING REAR | 1 | 70214 | 316SS | 70215 | ALLOY C | 70216 | ALLOY 20 | 3 |
| •SHAFT, DRIVE | 1 | 70372 | 316SS | 70373 | ALLOY C | 70374 | ALLOY 20 | 4 |
| •SHAFT IDLER | 1 | 70378 | 316SS | 70379 | ALLOY C | 70380 | ALLOY 20 | 5 |
| •RING RETAINING | 4 | 76702 | ALLOY 20 | 76701 | ALLOY C | 76702 | ALLOY 20 | 10 11 |
| •KEY METAL DRIVE GEAR | *1 | 71906 | ALLOY 20 | 71904 | ALLOY C | 71906 | ALLOY 20 | 8 |
| •KEY, PLASTIC DRIVE GEAR | *1 | 71905 | ALLOY 20 | 71903 | ALLOY C | 71905 | ALLOY 20 | 8 |
| •KEY MTL/CBN IDLER GEAR | *1 | 71906 | ALLOY 20 | 71904 | ALLOY C | 71906 | ALLOY 20 | 9 |
| •KEY, PLASTIC IDLER GEAR | *1 | 71905 | ALLOY 20 | 71903 | ALLOY C | 71905 | ALLOY 20 | 9 |
| •PIN, BEARING LOCK | 4 | 41801 | TFE | 41801 | TFE | 41801 | TFE | 14 |
| •O-RING, HOUSING | 2 | 61101 | TFE | 61101 | TFE | 61101 | TFE | 16 |
| PIN HOUSING | 4 | 40801 | 316SS | 40801 | 316SS | 40801 | 316SS | 17 |
| BOLT HOUSING | 4 | 72006 | 188SS | 72006 | 188SS | 72006 | 188SS | 18A |
| NUT HOUSING BOLT | 4 | 72101 | 188SS | 72101 | 188SS | 72101 | 188SS | 19 |
| NAMEPLATE | 1 | 41201 | 188SS | 41201 | 188SS | 41201 | 188SS | -- |
| NON-VARIABLE COMPONENTS FOR POSITION 9 OPTIONAL PUMPS | | | | | | | | |
| POSITION 9 OPTIONS - DELETE CORRESPONDING STANDARD PUMP COMPONENT FROM B/M | | | | | | | | |
| V — HOUSING CENTER - VENT FNPT | 1 | 70014-2 | 316SS | 70016-2 | ALLOY C | 70015-2 | ALLOY 20 | 2 |
| V — HOUSING, CENTER - VENT FBSPT | 1 | 70020-2 | 316SS | 70022-2 | ALLOY C | 70021-2 | ALLOY 20 | 2 |
| V — PLUG, 1/8" NPT | *1 | W772565-316 | 316SS | 52301 | ALLOY C | 52300 | ALLOY 20 | 62 |
| C A — HOUSING, FRONT - BRG FLUSH | 1 | 70115 | 316SS | 70117 | ALLOY C | 70123 | ALLOY 20 | 1 |
| C A — HOUSING, FRONT-BRG FLUSH LIP SEAL | 1 | 70148 | 316SS | 70149 | ALLOY C | 70150 | ALLOY 20 | 1 |
| C A — HOUSING, REAR - BRG FLUSH | 1 | 70212 | 316SS | 70234 | ALLOY C | 70233 | ALLOY 20 | 3 |
| C — PLUG, 1/8" NPT | *3 | 52300 | ALLOY 20 | 52301 | ALLOY C | 52300 | ALLOY 20 | 62 |
| C B — •PIN, BEARING LOCK | 4 | 41802 | ALLOY 20 | 41806 | ALLOY C | 41802 | ALLOY 20 | 14 |
| C B — •O-RING, HOUSING | 2 | 61104 | SS/PFA | 61104 | SS/PFA | 61104 | SS/PFA | 16 |
| D — •BEARING, SLOTTED | 5 | 70419 | CARBON | 70419 | CARBON | 70419 | CARBON | 12,13 |
| E — •WEAR PLATE, SLOTTED | 4 | 70509 | CARBON | 70509 | CARBON | 70509 | CARBON | 15 |
| N — •GEAR, DRIVE/IDLER | 1-2 | 70613 | ALLOY C | 70613 | ALLOY C | 70613 | ALLOY C | 6,7 |
| N — •GEAR DRIVE/IDLER | 1-2 | 70633 | ALLOY 20 | --- | --- | 70633 | ALLOY 20 | 6 7 |
| N — •GEAR, IDLER | 1 | 70651 | CARBON | 70651 | CARBON | 70651 | CARBON | 7 |
| N — •GEAR, DRIVE/IDLER | 1-2 | 70623 | TFE(GF) | 70623 | TFE(GF) | 70623 | TFE(GF) | 6,7 |
| N — •GEAR, DRIVE/IDLER | 1-2 | 70677 | PEEK | 70677 | PEEK | 70677 | PEEK | 6,7 |
| N — •KEY METAL DRIVE GEAR | *1 | 71910 | ALLOY 20 | 71911 | ALLOY C | 71910 | ALLOY 20 | 8 |
| N — •KEY, PLASTIC DRIVE GEAR | *1 | 71916 | ALLOY 20 | 71917 | ALLOY C | 71916 | ALLOY 20 | 8 |
| N — •KEY, MTL/CBN IDLER GEAR | *1 | 71910 | ALLOY 20 | 71911 | ALLOY C | 71910 | ALLOY 20 | 9 |
| N — •KEY, PLASTIC IDLER GEAR | *1 | 71916 | ALLOY 20 | 71917 | ALLOY C | 71916 | ALLOY 20 | 9 |

*COMPONENT QUANTITY MAY BE CUMULATIVE OVER ENTIRE B/M
•DENOTES RECOMMENDED SPARE PART

# G4 SERIES PUMP
# CONSOLIDATED B/M

| | | | STANDARD PUMP MATERIAL | | | | | | |
|---|---|---|---|---|---|---|---|---|---|
| | | | 316SS (A) OR (K) | | ALLOY C (C) OR (M) | | ALLOY 20 (D) OR (N) | | |
| DESCRIPTION | | QTY | PART NO | MATL | PART NO | MATL | PART NO | MATL | ITEM |
| POSITION 4 & 5 DRIVE AND IDLER GEAR | | | | | | | | | |
| C | *GEAR, DRIVE/IDLER | 1-2 | 70638 | ALLOY C | 70638 | ALLOY C | 70638 | ALLOY C | 6 7 |
| D | *GEAR, DRIVE/IDLER | 1-2 | 70642 | ALLOY 20 | --- | --- | 70642 | ALLOY 20 | 6 7 |
| K | *GEAR, IDLER | 1 | 70611 | CARBON | 70611 | CARBON | 70611 | CARBON | 7 |
| T | *GEAR, DRIVE/IDLER | 1-2 | 70600 | TFE(GF) | 70600 | TFE(GF) | 70600 | TFE(GF) | 6,7 |
| E | *GEAR, DRIVE/IDLER | 1-2 | 70671 | PEEK | 70671 | PEEK | 70671 | PEEK | 6,7 |
| POSITION 6 WEAR PLATE MATERIAL - **QTY 8 WHEN USING NARROW WIDTH GEARS | | | | | | | | | |
| K | *WEAR PLATE | 4 | 70501 | CARBON | 70501 | CARBON | 70501 | CARBON | 15 |
| | *WEAR PLATE, NARROW WIDTH GEARS | 4 | 70536 | CARBON | 70536 | CARBON | 70536 | CARBON | 15 |
| T | *WEAR PLATE | **4 | 70504 | TFE(GF) | 70504 | TFE(GF) | 70504 | TFE(GF) | 15 |
| Z | *WEAR PLATE | **4 | 70503 | CERAMIC | 70503 | CERAMIC | 70503 | CERAMIC | 15 |
| E | *WEAR PLATE | **4 | 70535 | PEEK | 70535 | PEEK | 70535 | PEEK | 15 |
| POSITION 7 BEARING MATERIAL | | | | | | | | | |
| K | *BEARING | 5 | 70404 | CARBON | 70404 | CARBON | 70404 | CARBON | 12 13 |
| T | *BEARING | 1 | 70401 | TFE(GF) | 70401 | TFE(GF) | 70401 | TFE(GF) | 12 |
| | *BEARING | 3 | 70402 | TFE(GF) | 70402 | TFE(GF) | 70402 | TFE(GF) | 12,13 |
| POSITION 8 SEAL ARRANGEMENT | | | | | | | | | |
| STANDARD STUFFING BOX | | | | | | | | | |
| COMMON PARTS | GLAND NUT | 1 | 11710 | ALLOY 20 | 11709 | ALLOY C | 11710 | ALLOY 20 | 34 |
| | LOCK NUT | 1 | 21602 | 316SS | 21602 | 316SS | 21602 | 316SS | 35 |
| | HOUSING EXTENSION | 1 | 14503 | ALLOY 20 | 74501 | ALLOY C | 14503 | ALLOY 20 | 33 |
| | PACKING GLAND | 1 | 71506 | ALLOY 20 | 71504 | ALLOY C | 71506 | ALLOY 20 | 38 |
| B | *PACKING RING | 5 | 62608 | TFE(BRD) | 62608 | TFE(BRD) | 62608 | TFE(BRD) | 42 |
| | *PACKING END RING | 1 | 62702 | TFE(GF) | 62702 | TFE(GF) | 62702 | TFE(GF) | 41 |
| G | *PACKING RING | 6 | 62606 | GRAFOIL | 62606 | GRAFOIL | 62606 | GRAFOIL | 42 |
| U-CUP LIP SEAL | | | | | | | | | |
| COMMON PARTS | LOCK NUT, HOUSING | 1 | 11603 | 316SS | 11603 | 316SS | 11603 | 316SS | 32 |
| | GLAND NUT | 1 | 11724 | ALLOY 20 | 11728 | ALLOY C | 11724 | ALLOY 20 | 34 |
| J | *LIP SEAL | 1 | 71402 | VITON | 71402 | VITON | 71402 | VITON | 50 |
| | SPRING, LIP SEAL | 1 | 11206 | ALLOY C | 11206 | ALLOY C | 11206 | ALLOY C | 53 |
| LANTERN RING STUFFING BOX | | | | | | | | | |
| COMMON PARTS | PACKING BOX | 1 | 74504 | ALLOY 20 | 74503 | ALLOY C | 74504 | ALLOY 20 | 30 |
| | GASKET | 1 | 71101 | TFE | 71101 | TFE | 71101 | TFE | 31 |
| | LOCK NUT, HOUSING | 1 | 11603 | 316SS | 11603 | 316SS | 11603 | 316SS | 32 |
| | GLAND NUT | 1 | 11710 | ALLOY 20 | 11709 | ALLOY C | 11710 | ALLOY 20 | 34 |
| | LOCK NUT | 1 | 21602 | 316SS | 21602 | 316SS | 21602 | 316SS | 35 |
| | LANTERN RING | 1 | 77113 | TFE | 77113 | TFE | 77113 | TFE | 46 |
| | PACKING GLAND | 1 | 71506 | ALLOY 20 | 71504 | ALLOY C | 71506 | ALLOY 20 | 38 |
| | GREASE FITTING | 1 | 27201 | 310SS | 27201 | 310SS | 27201 | 310SS | 65 |
| | PLUG, 1/8' NPT | *1 | W772565-316 | 316SS | 52301 | ALLOY C | 52300 | ALLOY 20 | 62 |
| N | *PACKING RING | 8 | 62608 | TFE(BRD) | 62608 | TFE(BRD) | 62608 | TFE(BRD) | 42 |
| | *PACKING END RING | 1 | 62702 | TFE(GF) | 62702 | TFE(GF) | 62702 | TFE(GF) | 41 |
| R | *PACKING RING | 9 | 62606 | GRAFOIL | 62606 | GRAFOIL | 62606 | GRAFOIL | 42 |

*COMPONENT QUANTITY MAY BE CUMULATIVE OVER ENTIRE B/M
•DENOTES RECOMMENDED SPARE PART

# G4 SERIES PUMP
# CONSOLIDATED B/M

| | | | STANDARD PUMP MATERIAL | | | | | | |
|---|---|---|---|---|---|---|---|---|---|
| | | | 316SS (A) OR (K) | | ALLOY C (C) OR (M) | | ALLOY 20 (D) OR (N) | | |
| | DESCRIPTION | QTY | PART NO | MATL | PART NO | MATL | PART NO | MATL | ITEM |
| POSITION 8 SEAL ARRANGEMENT (CONT'D) | | | | | | | | | |
| INTERNAL MECHANICAL SEAL | | | | | | | | | |
| COMMON PARTS | SEAL HOUSING | 1 | 74509 | ALLOY 20 | 74510 | ALLOY C | 74509 | ALLOY 20 | 30 |
| | GASKET | 1 | 71101 | TFE | 71101 | TFE | 71101 | TFE | 31 |
| | LOCK NUT HOUSING | 1 | 11603 | 316SS | 11603 | 316SS | 11603 | 316SS | 32 |
| | GLAND NUT | 1 | 21727 | ALLOY 20 | 21726 | ALLOY C | 21727 | ALLOY 20 | 34 |
| | LOCK NUT | 1 | 21602 | 316SS | 21602 | 316SS | 21602 | 316SS | 35 |
| | PLUG 1/8" NPT | *2 | W772565-316 | 316SS | 52301 | ALLOY C | 52300 | ALLOY 20 | 62 |
| K | •SEAL HEAD ASSEMBLY | 1 | 77033 | 020/TFE | 77034 | HC0/TFE | 77033 | 020/TFE | 60 |
| | •SEAL SEAT W/ O-RING (TFE) | 1 | 71551 | ALLOY 20 | 71553 | ALLOY C | 71551 | ALLOY 20 | 55 |
| Q | •SEAL HEAD ASSEMBLY | 1 | 77033 | 020/TFE | 77034 | HC0/TFE | 77033 | 020/TFE | 60 |
| | •SEAL SEAT W/ O-RING (TFE) | 1 | 71557 | SICBD | 71557 | SICBD | 71557 | SICBD | 55 |
| T | •SEAL HEAD ASSEMBLY | 1 | 77036 | 020/CBN | 77037 | HC0/CBN | 77036 | 020/CBN | 60 |
| | •SEAL SEAT W/ O-RING (TFE) | 1 | 71551 | ALLOY 20 | 71553 | ALLOY C | 71551 | ALLOY 20 | 55 |
| U | •SEAL HEAD ASSEMBLY | 1 | 77036 | 020/CBN | 77037 | HC0/CBN | 77036 | 020/CBN | 60 |
| | •SEAL SEAT W/ O-RING (TFE) | 1 | 71557 | SICBD | 71557 | SICBD | 71557 | SICBD | 55 |
| EXTERNAL MECHANICAL SEAL | | | | | | | | | |
| COMMON PARTS | GLAND NUT | 1 | 11719 | ALLOY 20 | 11716 | ALLOY C | 11719 | ALLOY 20 | 34 |
| | LOCK NUT HOUSING | 1 | 11603 | 316SS | 11603 | 316SS | 11603 | 316SS | 32 |
| V | •SEAL HEAD ASSEMBLY | 1 | 77036 | 020/CBN | 77037 | HC0/CBN | 77036 | 020/CBN | 60 |
| | •SEAL SEAT W/ O-RING (TFE) | 1 | 71554 | ALLOY 20 | 71556 | ALLOY C | 71554 | ALLOY 20 | 55 |
| DOUBLE MECHANICAL SEAL | | | | | | | | | |
| COMMON PARTS | SEAL HOUSING | 1 | 74523 | ALLOY 20 | 74519 | ALLOY C | 74523 | ALLOY 20 | 30 |
| | GASKET | 1 | 71101 | TFE | 71101 | TFE | 71101 | TFE | 31 |
| | LOCK NUT HOUSING | 1 | 11603 | 316SS | 11603 | 316SS | 11603 | 316SS | 32 |
| | GLAND NUT | 1 | 21727 | ALLOY 20 | 21726 | ALLOY C | 21727 | ALLOY 20 | 34 |
| | LOCK NUT | 1 | 21602 | 316SS | 21602 | 316SS | 21602 | 316SS | 35 |
| | •SEAL HEAD ASSEMBLY | 1 | 77051 | 316/CBN | 77051 | 316/CBN | 77051 | 316/CBN | 60 |
| Y | •SEAL SEAT W/ O-RING (TFE) DR | 1 | 71551 | ALLOY 20 | 71553 | ALLOY C | 71551 | ALLOY 20 | 55 |
| | •SEAL SEAT W/ O-RING (TFE) PUMP | 1 | 71554 | ALLOY 20 | 71556 | ALLOY C | 71554 | ALLOY 20 | 56 |
| EXTERNAL MECHANICAL SEAL FOR VACUUM SERVICE | | | | | | | | | |
| COMMON PARTS | SEAL HOUSING | 1 | 74509 | ALLOY 20 | 74510 | ALLOY C | 74509 | ALLOY 20 | 30 |
| | GASKET | 1 | 71101 | TFE | 71101 | TFE | 71101 | TFE | 31 |
| | LOCK NUT HOUSING | 1 | 11603 | 316SS | 11603 | 316SS | 11603 | 316SS | 32 |
| | GLAND NUT | 1 | 21727 | ALLOY 20 | 21726 | ALLOY C | 21727 | ALLOY 20 | 34 |
| | LOCK NUT | 1 | 21602 | 316SS | 21602 | 316SS | 21602 | 316SS | 35 |
| | PLUG, 1/8" NPT | *1 | W772565-316 | 316SS | 52301 | ALLOY C | 52300 | ALLOY 20 | 62 |
| Z | •SEAL HEAD ASSEMBLY | 1 | 77036 | 020/CBN | 77037 | HC0/CBN | 77036 | 020/CBN | 60 |
| | •SEAL SEAT W/ O-RING (TFE) | 1 | 71551 | ALLOY 20 | 71553 | ALLOY C | 71551 | ALLOY 20 | 55 |

*COMPONENT QUANTITY MAY BE CUMULATIVE OVER ENTIRE B/M
•DENOTES RECOMMENDED SPARE PART

# G6 SERIES PUMP
# CONSOLIDATED B/M

| DESCRIPTION | QTY | STANDARD PUMP MATERIAL: 316SS (A) OR (K) PART NO | 316SS MATL | ALLOY C (C) OR (M) PART NO | ALLOY C MATL | ALLOY 20 (D) OR (N) PART NO | ALLOY 20 MATL | ITEM |
|---|---|---|---|---|---|---|---|---|
| POSITION 3 STANDARD PUMP - NON-VARIABLE COMPONENTS | | | | | | | | |
| HOUSING, FRONT | 1 | 40111 | 316SS | 40112 | ALLOY C | 40113 | ALLOY 20 | 1 |
| HOUSING, CENTER FNPT | 1 | 40002 | 316SS | 40006 | ALLOY C | 40008 | ALLOY 20 | 2 |
| HOUSING, CENTER FBSPT | 1 | 40011 | 316SS | 40023 | ALLOY C | 40017 | ALLOY 20 | 2 |
| HOUSING, REAR | 1 | 40218 | 316SS | 40219 | ALLOY C | 40220 | ALLOY 20 | 3 |
| +SHAFT, DRIVE | 1 | 40359 | 316SS | 40361 | ALLOY C | 40373 | ALLOY 20 | 4 |
| +SHAFT, IDLER | 1 | 40360 | 316SS | 40362 | ALLOY C | 40374 | ALLOY 20 | 5 |
| +RING, RETAINING | 4 | 46702 | ALLOY 20 | 46701 | ALLOY C | 46702 | ALLOY 20 | 10,11 |
| +KEY, METAL DRIVE GEAR | *1 | 41905 | ALLOY 20 | 41903 | ALLOY C | 41905 | ALLOY 20 | 8 |
| +KEY, PLASTIC DRIVE GEAR | *1 | 41906 | ALLOY 20 | 41904 | ALLOY C | 41906 | ALLOY 20 | 8 |
| +KEY, MTL/CBN IDLER GEAR | *1 | 41905 | ALLOY 20 | 41903 | ALLOY C | 41905 | ALLOY 20 | 9 |
| +KEY, PLASTIC IDLER GEAR | *1 | 41906 | ALLOY 20 | 41904 | ALLOY C | 41906 | ALLOY 20 | 9 |
| +PIN, BEARING LOCK | 4 | 41801 | TFE | 41801 | TFE | 41801 | TFE | 14 |
| +O-RING, HOUSING | 2 | 41101 | TFE | 41101 | TFE | 41101 | TFE | 16 |
| PIN, HOUSING | 4 | 40801 | 316SS | 40801 | 316SS | 40801 | 316SS | 17 |
| BOLT, HOUSING | 4 | 62005 | 188SS | 62005 | 188SS | 62005 | 188SS | 18A |
| NUT, HOUSING BOLT | 4 | 62101 | 188SS | 62101 | 188SS | 62101 | 188SS | 19 |
| NAMEPLATE | 1 | 41201 | 188SS | 41201 | 188SS | 41201 | 188SS | -- |
| NON-VARIABLE COMPONENTS FOR POSITION 9 OPTIONAL PUMPS | | | | | | | | |
| POSITION 9 OPTIONS - DELETE CORRESPONDING STANDARD PUMP COMPONENT FROM B/M | | | | | | | | |
| V: HOUSING, CENTER - VENT FNPT | 1 | 40002-2 | 316SS | 40006-2 | ALLOY C | 40008-2 | ALLOY 20 | 2 |
| V: HOUSING, CENTER - VENT FBSPT | 1 | 40011-2 | 316SS | 40023-2 | ALLOY C | 40017-2 | ALLOY 20 | 2 |
| V: PLUG, 1/8" NPT | *1 | W772565-316 | 316SS | 52301 | ALLOY C | 52300 | ALLOY 20 | 62 |
| C, A: HOUSING, FRONT - BRG FLUSH | 1 | 40117 | 316SS | 40123 | ALLOY C | 40125 | ALLOY 20 | 1 |
| C, A: HOUSING, REAR - BRG FLUSH | 1 | 40224 | 316SS | 40231 | ALLOY C | 40234 | ALLOY 20 | 3 |
| C: PLUG, 1/8" NPT | *3 | W772565-316 | 316SS | 52301 | ALLOY C | 52300 | ALLOY 20 | 62 |
| C, B: +PIN, BEARING LOCK | 4 | 41802 | ALLOY 20 | 41806 | ALLOY C | 41802 | ALLOY 20 | 14 |
| C, B: +O-RING, HOUSING | 2 | 41107 | SS/PFA | 41107 | SS/PFA | 41107 | SS/PFA | 16 |
| D: +BEARING, SLOTTED | 4 | 40428 | CARBON | 40428 | CARBON | 40428 | CARBON | 12,13 |
| D: +BEARING, SLOTTED | 4 | 40417 | TFE(GF) | 40417 | TFE(GF) | 40417 | TFE(GF) | 12,13 |
| E: +WEAR PLATE, SLOTTED | 4 | 40511 | CARBON | 40511 | CARBON | 40511 | CARBON | 15 |
| E: +WEAR PLATE, SLOTTED | 4 | 40513 | TFE(GF) | 40513 | TFE(GF) | 40513 | TFE(GF) | 15 |
| N: +GEAR, DRIVE/IDLER | 1-2 | 40604 | ALLOY C | 40604 | ALLOY C | 40604 | ALLOY C | 6,7 |
| N: +GEAR, IDLER | 1 | 40681 | CARBON | 40681 | CARBON | 40681 | CARBON | 7 |
| N: +GEAR, DRIVE/IDLER | 1-2 | 40648 | TFE(GF) | 40648 | TFE(GF) | 40648 | TFE(GF) | 6,7 |
| N: +GEAR, DRIVE/IDLER | 1-2 | 40717 | PEEK | 40717 | PEEK | 40717 | PEEK | 6,7 |
| N: +KEY, METAL DRIVE GEAR | *1 | 41920 | ALLOY 20 | 41913 | ALLOY C | 41920 | ALLOY 20 | 8 |
| N: +KEY, PLASTIC DRIVE GEAR | *1 | 41921 | ALLOY 20 | 41914 | ALLOY C | 41921 | ALLOY 20 | 8 |
| N: +KEY, MTL/CBN IDLER GEAR | *1 | 41920 | ALLOY 20 | 41913 | ALLOY C | 41920 | ALLOY 20 | 9 |
| N: +KEY, PLASTIC IDLER GEAR | *1 | 41921 | ALLOY 20 | 41914 | ALLOY C | 41921 | ALLOY 20 | 9 |

*COMPONENT QUANTITY MAY BE CUMULATIVE OVER ENTIRE B/M
+DENOTES RECOMMENDED SPARE PART

# G6 SERIES PUMP
# CONSOLIDATED B/M

| | | | STANDARD PUMP MATERIAL | | | | | | |
|---|---|---|---|---|---|---|---|---|---|
| | | | 316SS (A) OR (K) | | ALLOY C (C) OR (M) | | ALLOY 20 (D) OR (N) | | |
| DESCRIPTION | | QTY | PART NO | MATL | PART NO | MATL | PART NO | MATL | ITEM |
| POSITION 4 & 5 DRIVE AND IDLER GEAR | | | | | | | | | |
| C | *GEAR, DRIVE/IDLER | 1-2 | 40668 | ALLOY C | 40668 | ALLOY C | 40668 | ALLOY C | 6,7 |
| D | *GEAR, DRIVE/IDLER | 1-2 | 40674 | ALLOY 20 | --- | --- | 40674 | ALLOY 20 | 6,7 |
| K | *GEAR, IDLER | 1 | 40622 | CARBON | 40622 | CARBON | 40622 | CARBON | 7 |
| T | *GEAR, DRIVE/IDLER | 1-2 | 40600 | TFE(GF) | 40600 | TFE(GF) | 40600 | TFE(GF) | 6,7 |
| E | *GEAR, DRIVE/IDLER | 1-2 | 40715 | PEEK | 40715 | PEEK | 40715 | PEEK | 6,7 |
| POSITION 6 WEAR PLATE MATERIAL - **QTY 8 WHEN USING NARROW WIDTH GEARS | | | | | | | | | |
| K | *WEAR PLATE | **4 | 40501 | CARBON | 40501 | CARBON | 40501 | CARBON | 15 |
| T | *WEAR PLATE | | 40504 | TFE(GF) | 40504 | TFE(GF) | 40504 | TFE(GF) | 15 |
| Z | *WEAR PLATE | | 40503 | CERAMIC | 40503 | CERAMIC | 40503 | CERAMIC | 15 |
| E | *WEAR PLATE | | 40523 | PEEK | 40523 | PEEK | 40523 | PEEK | 15 |
| POSITION 7 BEARING MATERIAL | | | | | | | | | |
| K | *BEARING | 4 | 40426 | CARBON | 40426 | CARBON | 40426 | CARBON | 12,13 |
| T | *BEARING | | 40425 | TFE(GF) | 40425 | TFE(GF) | 40425 | TFE(GF) | 12,13 |
| POSITION 8 SEAL ARRANGEMENT | | | | | | | | | |
| STANDARD STUFFING BOX | | | | | | | | | |
| COMMON PARTS | GLAND NUT | 1 | 21716 | ALLOY 20 | 21711 | ALLOY C | 21716 | ALLOY 20 | 34 |
| | LOCK NUT | 1 | 21602 | 316SS | 21602 | 316SS | 21602 | 316SS | 35 |
| | PACKING GLAND | 1 | 21514 | ALLOY 20 | 21512 | ALLOY C | 21514 | ALLOY 20 | 38 |
| B | *PACKING RING | 4 | 26408 | TFE(BRD) | 26408 | TFE(BRD) | 26408 | TFE(BRD) | 42 |
| | *PACKING END RING | 1 | 26301 | TFE | 26301 | TFE | 26301 | TFE | 41 |
| G | *PACKING RING | 4 | 26409 | GRAFOIL | 26409 | GRAFOIL | 26409 | GRAFOIL | 42 |
| U-CUP LIP SEAL | | | | | | | | | |
| COMMON PARTS | LOCK NUT | 1 | 21602 | 316SS | 21602 | 316SS | 21602 | 316SS | 35 |
| | GLAND NUT | 1 | 11710 | ALLOY 20 | 11709 | ALLOY C | 11710 | ALLOY 20 | 34 |
| J | *LIP SEAL | 1 | 21417 | VITON | 21417 | VITON | 21417 | VITON | 50 |
| | SPRING, LIP SEAL | 1 | 21206 | ALLOY C | 21206 | ALLOY C | 21206 | ALLOY C | 53 |
| LANTERN RING STUFFING BOX | | | | | | | | | |
| COMMON PARTS | PACKING BOX | 1 | 24510 | ALLOY 20 | 24509 | ALLOY C | 24510 | ALLOY 20 | 30 |
| | GASKET | 1 | 21106 | TFE | 21106 | TFE | 21106 | TFE | 31 |
| | GLAND NUT | 1 | 21716 | ALLOY 20 | 21711 | ALLOY C | 21716 | ALLOY 20 | 34 |
| | LOCK NUT | 2 | 21602 | 316SS | 21602 | 316SS | 21602 | 316SS | 35 |
| | LANTERN RING | 1 | 27103 | ALLOY 20 | 27111 | TFE | 27103 | ALLOY 20 | 46 |
| | PACKING GLAND | 1 | 21514 | ALLOY 20 | 21512 | ALLOY C | 21514 | ALLOY 20 | 38 |
| | GREASE FITTING | 1 | 27201 | 310SS | 27201 | 310SS | 27201 | 310SS | 65 |
| | PLUG, 1/8" NPT | *1 | W772565-316 | 316SS | 52301 | ALLOY C | 52300 | ALLOY 20 | 62 |
| N | *PACKING RING | 9 | 26408 | TFE(BRD) | 26408 | TFE(BRD) | 26408 | TFE(BRD) | 42 |
| | *PACKING END RING | 1 | 26301 | TFE | 26301 | TFE | 26301 | TFE | 41 |
| R | *PACKING RING | 9 | 26409 | GRAFOIL | 26409 | GRAFOIL | 26409 | GRAFOIL | 42 |

*COMPONENT QUANTITY MAY BE CUMULATIVE OVER ENTIRE B/M
+DENOTES RECOMMENDED SPARE PART

# G6 SERIES PUMP
# CONSOLIDATED B/M

POSITION 8 SEAL ARRANGEMENT (CONT'D)

| | | | STANDARD PUMP MATERIAL | | | | | | |
|---|---|---|---|---|---|---|---|---|---|
| | | | 316SS (A) OR (K) | | ALLOY C (C) OR (M) | | ALLOY 20 (D) OR (N) | | |
| | DESCRIPTION | QTY | PART NO | MATL | PART NO | MATL | PART NO | MATL | ITEM |
| INTERNAL MECHANICAL SEAL | | | | | | | | | |
| COMMON PARTS | SEAL HOUSING | 1 | 24518 | ALLOY 20 | 24519 | ALLOY C | 24518 | ALLOY 20 | 30 |
| | GASKET | 1 | 21106 | TFE | 21106 | TFE | 21106 | TFE | 31 |
| | LOCK NUT | 2 | 21602 | 316SS | 21602 | 316SS | 21602 | 316SS | 35 |
| | GLAND NUT | 1 | 21727 | ALLOY 20 | 21726 | ALLOY C | 21727 | ALLOY 20 | 34 |
| | PLUG, 1/8" NPT | *2 | W772565-316 | 316SS | 52301 | ALLOY C | 52300 | ALLOY 20 | 62 |
| K | +SEAL HEAD ASSEMBLY | 1 | 27097 | 020/TFE | 27099 | HC0/TFE | 27097 | 020/TFE | 60 |
| | +SEAL SEAT W/ O-RING (TFE) | 1 | 21563 | ALLOY 20 | 21565 | ALLOY C | 21563 | ALLOY 20 | 55 |
| Q | +SEAL HEAD ASSEMBLY | 1 | 27097 | 020/TFE | 27099 | HC0/TFE | 27097 | 020/TFE | 60 |
| | +SEAL SEAT W/ O-RING (TFE) | 1 | 21571 | SICBD | 21571 | SICBD | 21571 | SICBD | 55 |
| T | +SEAL HEAD ASSEMBLY | 1 | 27089 | 020/CBN | 27090 | HC0/CBN | 27089 | 020/CBN | 60 |
| | +SEAL SEAT W/ O-RING (TFE) | 1 | 21563 | ALLOY 20 | 21565 | ALLOY C | 21563 | ALLOY 20 | 55 |
| U | +SEAL HEAD ASSEMBLY | 1 | 27089 | 020/CBN | 27090 | HC0/CBN | 27089 | 020/CBN | 60 |
| | +SEAL SEAT W/ O-RING (TFE) | 1 | 21571 | SICBD | 21571 | SICBD | 21571 | SICBD | 55 |
| EXTERNAL MECHANICAL SEAL | | | | | | | | | |
| COMMON PARTS | GLAND NUT | 1 | 21727 | ALLOY 20 | 21726 | ALLOY C | 21727 | ALLOY 20 | 34 |
| | LOCK NUT | 1 | 21602 | 316SS | 21602 | 316SS | 21602 | 316SS | 35 |
| V | +SEAL HEAD ASSEMBLY | 1 | 27089 | 020/CBN | 27090 | HC0/CBN | 27089 | 020/CBN | 60 |
| | +SEAL SEAT W/ O-RING (TFE) | 1 | 21563 | ALLOY 20 | 21565 | ALLOY C | 21563 | ALLOY 20 | 55 |
| W | +SEAL HEAD ASSEMBLY | 1 | 27089 | 020/CBN | 27090 | HC0/CBN | 27089 | 020/CBN | 60 |
| | +SEAL SEAT W/ O-RING (TFE) | 1 | 21571 | SICBD | 21571 | SICBD | 21571 | SICBD | 55 |
| DOUBLE MECHANICAL SEAL | | | | | | | | | |
| COMMON PARTS | SEAL HOUSING | 1 | 24518 | ALLOY 20 | 24519 | ALLOY C | 24518 | ALLOY 20 | 30 |
| | GASKET | 1 | 21106 | TFE | 21106 | TFE | 21106 | TFE | 31 |
| | LOCK NUT | 2 | 21602 | 316SS | 21602 | 316SS | 21602 | 316SS | 35 |
| | GLAND NUT | 1 | 21727 | ALLOY 20 | 21726 | ALLOY C | 21727 | ALLOY 20 | 34 |
| Y | +SEAL HEAD ASSEMBLY | 1 | 27092 | 316/CBN | 27092 | 316/CBN | 27092 | 316/CBN | 60 |
| | +SEAL SEAT W/ O-RING (TFE) | 2 | 21566 | ALLOY 20 | 21568 | ALLOY C | 21566 | ALLOY 20 | 55 |
| EXTERNAL MECHANICAL SEAL FOR VACUUM SERVICE | | | | | | | | | |
| COMMON PARTS | SEAL HOUSING | 1 | 24518 | ALLOY 20 | 24519 | ALLOY C | 24518 | ALLOY 20 | 30 |
| | GASKET | 1 | 21106 | TFE | 21106 | TFE | 21106 | TFE | 31 |
| | LOCK NUT | 2 | 21602 | 316SS | 21602 | 316SS | 21602 | 316SS | 35 |
| | GLAND NUT | 1 | 21727 | ALLOY 20 | 21726 | ALLOY C | 21727 | ALLOY 20 | 34 |
| | PLUG, 1/8" NPT | *1 | W772565-316 | 316SS | 52301 | ALLOY C | 52300 | ALLOY 20 | 62 |
| | +SHAFT, DRIVE - 10"LG, | **1 | 40381 | 316SS | 40395 | ALLOY C | 40395 | ALLOY C | 4 |
| Z | +SEAL HEAD ASSEMBLY | 1 | 27089 | 020/CBN | 27090 | HC0/CBN | 27089 | 020/CBN | 60 |
| | +SEAL SEAT W/ O-RING (TFE) | 1 | 21563 | ALLOY 20 | 21565 | ALLOY C | 21563 | ALLOY 20 | 55 |

*COMPONENT QUANTITY MAY BE CUMULATIVE OVER ENTIRE B/M
**DELETE CORRESPONDING STANDARD PUMP COMPONENT, POSITION 3
+DENOTES RECOMMENDED SPARE PART

# G8 SERIES PUMP
# CONSOLIDATED B/M

| DESCRIPTION | QTY | STANDARD PUMP MATERIAL: 316SS (A) OR (K) PART NO | 316SS MATL | ALLOY C (C) OR (M) PART NO | ALLOY C MATL | ALLOY 20 (D) OR (N) PART NO | ALLOY 20 MATL | ITEM |
|---|---|---|---|---|---|---|---|---|
| POSITION 3 STANDARD PUMP - NON-VARIABLE COMPONENTS | | | | | | | | |
| HOUSING, FRONT | 1 | 40111 | 316SS | 40112 | ALLOY C | 40113 | ALLOY 20 | 1 |
| HOUSING, CENTER FNPT | 1 | 40052 | 316SS | 40053 | ALLOY C | 40054 | ALLOY 20 | 2 |
| HOUSING, CENTER FBSPT | 1 | 40064 | 316SS | 40065 | ALLOY C | 40066 | ALLOY 20 | 2 |
| HOUSING, REAR | 1 | 40218 | 316SS | 40219 | ALLOY C | 40220 | ALLOY 20 | 3 |
| •SHAFT, DRIVE | 1 | 40351 | ALLOY 20 | 40347 | ALLOY C | 40351 | ALLOY 20 | 4 |
| •SHAFT, IDLER | 1 | 40350 | ALLOY 20 | 40346 | ALLOY C | 40350 | ALLOY 20 | 5 |
| •RING, RETAINING | 4 | 46702 | ALLOY 20 | 46701 | ALLOY C | 46702 | ALLOY 20 | 10 11 |
| •KEY, METAL DRIVE GEAR | *2 | 41905 | ALLOY 20 | 41903 | ALLOY C | 41905 | ALLOY 20 | 8 |
| •KEY, PLASTIC DRIVE GEAR | *2 | 41906 | ALLOY 20 | 41904 | ALLOY C | 41906 | ALLOY 20 | 8 |
| •KEY, MTL/CBN IDLER GEAR | *2 | 41905 | ALLOY 20 | 41903 | ALLOY C | 41905 | ALLOY 20 | 9 |
| •KEY, PLASTIC IDLER GEAR | *2 | 41906 | ALLOY 20 | 41904 | ALLOY C | 41906 | ALLOY 20 | 9 |
| •PIN, BEARING LOCK | 4 | 41801 | TFE | 41801 | TFE | 41801 | TFE | 14 |
| •O-RING, HOUSING | 2 | 41101 | TFE | 41101 | TFE | 41101 | TFE | 16 |
| PIN, HOUSING | 4 | 40801 | 316SS | 40801 | 316SS | 40801 | 316SS | 17 |
| BOLT, HOUSING | 4 | 62006 | 188SS | 62006 | 188SS | 62006 | 188SS | 18A |
| NUT, HOUSING BOLT | 4 | 62101 | 188SS | 62101 | 188SS | 62101 | 188SS | 19 |
| NAMEPLATE | 1 | 41201 | 188SS | 41201 | 188SS | 41201 | 188SS | -- |
| NON-VARIABLE COMPONENTS FOR POSITION 9 OPTIONAL PUMPS | | | | | | | | |
| POSITION 9 OPTIONS - DELETE CORRESPONDING STANDARD PUMP COMPONENT FROM B/M | | | | | | | | |
| V: HOUSING, CENTER - VENT FNPT | 1 | 40052-2 | 316SS | 40053-2 | ALLOY C | 40054-2 | ALLOY 20 | 2 |
| V: HOUSING, CENTER - VENT FBSPT | 1 | 40064-2 | 316SS | 40065-2 | ALLOY C | 40066-2 | ALLOY 20 | 2 |
| V: PLUG 1/8" NPT | *1 | W772565-316 | 316SS | 52301 | ALLOY C | 52300 | ALLOY 20 | 62 |
| C, A: HOUSING, FRONT- BRG FLUSH | 1 | 40117 | 316SS | 40123 | ALLOY C | 40125 | ALLOY 20 | 1 |
| C, A: HOUSING, REAR - BRG FLUSH | 1 | 40224 | 316SS | 40231 | ALLOY C | 40234 | ALLOY 20 | 3 |
| C: PLUG 1/8" NPT | *3 | W772565-316 | 316SS | 52301 | ALLOY C | 52300 | ALLOY 20 | 62 |
| C, B: •PIN BEARING LOCK | 4 | 41802 | ALLOY 20 | 41806 | ALLOY C | 41802 | ALLOY 20 | 14 |
| C, B: •O-RING, HOUSING | 2 | 41107 | SS/PFA | 41107 | SS/PFA | 41107 | SS/PFA | 16 |
| D: •BEARING, SLOTTED | 4 | 40428 | CARBON | 40428 | CARBON | 40428 | CARBON | 12,13 |
| D: •BEARING, SLOTTED | 4 | 40417 | TFE(GF) | 40417 | TFE(GF) | 40417 | TFE(GF) | 12,13 |
| E: •WEAR PLATE, SLOTTED | 4 | 40511 | CARBON | 40511 | CARBON | 40511 | CARBON | 15 |
| E: •WEAR PLATE, SLOTTED | 4 | 40513 | TFE(GF) | 40513 | TFE(GF) | 40513 | TFE(GF) | 15 |

*COMPONENT QUANTITY MAY BE CUMULATIVE OVER ENTIRE B/M
•DENOTES RECOMMENDED SPARE PART

# G8 SERIES PUMP
# CONSOLIDATED B/M

| | | | STANDARD PUMP MATERIAL | | | | | | |
|---|---|---|---|---|---|---|---|---|---|
| | | | 316SS (A) OR (K) | | ALLOY C (C) OR (M) | | ALLOY 20 (D) OR (N) | | |
| DESCRIPTION | | QTY | PART NO | MATL | PART NO | MATL | PART NO | MATL | ITEM |
| POSITION 4 & 5 DRIVE AND IDLER GEAR | | | | | | | | | |
| C | •GEAR DRIVE/IDLER | 1-2 | 40689 | ALLOY C | 40689 | ALLOY C | 40689 | ALLOY C | 6 7 |
| D | •GEAR, DRIVE/IDLER | 1-2 | 40691 | ALLOY 20 | --- | --- | 40691 | ALLOY 20 | 6 7 |
| K | •GEAR, IDLER | 1 | 40623 | CARBON | 40623 | CARBON | 40623 | CARBON | 7 |
| T | •GEAR, DRIVE/IDLER | 1-2 | 40701 | TFE(GF) | 40701 | TFE(GF) | 40701 | TFE(GF) | 6,7 |
| E | •GEAR, DRIVE/IDLER | 1-2 | 40716 | PEEK | 40716 | PEEK | 40716 | PEEK | 6 7 |
| POSITION 6 WEAR PLATE MATERIAL | | | | | | | | | |
| K | •WEAR PLATE | 4 | 40501 | CARBON | 40501 | CARBON | 40501 | CARBON | 15 |
| T | •WEAR PLATE | | 40504 | TFE(GF) | 40504 | TFE(GF) | 40504 | TFE(GF) | 15 |
| Z | •WEAR PLATE | | 40503 | CERAMIC | 40503 | CERAMIC | 40503 | CERAMIC | 15 |
| E | •WEAR PLATE | | 40523 | PEEK | 40523 | PEEK | 40523 | PEEK | 15 |
| POSITION 7 BEARING MATERIAL | | | | | | | | | |
| K | •BEARING | 4 | 40426 | CARBON | 40426 | CARBON | 40426 | CARBON | 12,13 |
| T | •BEARING | | 40425 | TFE/GF | 40425 | TFE(GF) | 40425 | TFE(GF) | 12 13 |
| POSITION 8 SEAL ARRANGEMENT | | | | | | | | | |
| STANDARD STUFFING BOX | | | | | | | | | |
| COMMON PARTS | GLAND NUT | 1 | 21716 | ALLOY 20 | 21711 | ALLOY C | 21716 | ALLOY 20 | 34 |
| | LOCK NUT | 1 | 21602 | 316SS | 21602 | 316SS | 21602 | 316SS | 35 |
| | PACKING GLAND | 1 | 21514 | ALLOY 20 | 21512 | ALLOY C | 21514 | ALLOY 20 | 38 |
| B | •PACKING RING | 4 | 26408 | TFE(BRD) | 26408 | TFE(BRD) | 26408 | TFE(BRD) | 42 |
| | •PACKING END RING | 1 | 26301 | TFE | 26301 | TFE | 26301 | TFE | 41 |
| G | •PACKING RING | 4 | 26409 | GRAFOIL | 26409 | GRAFOIL | 26409 | GRAFOIL | 42 |
| U-CUP LIP SEAL | | | | | | | | | |
| COMMON PARTS | LOCK NUT | 1 | 21602 | 316SS | 21602 | 316SS | 21602 | 316SS | 35 |
| | GLAND NUT | 1 | 11710 | ALLOY 20 | 11709 | ALLOY C | 11710 | ALLOY 20 | 34 |
| J | •LIP SEAL | 1 | 21417 | VITON | 21417 | VITON | 21417 | VITON | 50 |
| | SPRING LIP SEAL | 1 | 21206 | ALLOY C | 21206 | ALLOY C | 21206 | ALLOY C | 53 |
| LANTERN RING STUFFING BOX | | | | | | | | | |
| COMMON PARTS | PACKING BOX | 1 | 24510 | ALLOY 20 | 24509 | ALLOY C | 24510 | ALLOY 20 | 30 |
| | GASKET | 1 | 21106 | TFE | 21106 | TFE | 21106 | TFE | 31 |
| | GLAND NUT | 1 | 21716 | ALLOY 20 | 21711 | ALLOY C | 21716 | ALLOY 20 | 34 |
| | LOCK NUT | 2 | 21602 | 316SS | 21602 | 316SS | 21602 | 316SS | 35 |
| | LANTERN RING | 1 | 27103 | ALLOY 20 | 27111 | TFE | 27103 | ALLOY 20 | 46 |
| | PACKING GLAND | 1 | 21514 | ALLOY 20 | 21512 | ALLOY C | 21514 | ALLOY 20 | 38 |
| | GREASE FITTING | 1 | 27201 | 310SS | 27201 | 310SS | 27201 | 310SS | 65 |
| | PLUG, 1/8' NPT | *1 | W772565-316 | 316SS | 52301 | ALLOY C | 52300 | ALLOY 20 | 62 |
| N | •PACKING RING | 9 | 26408 | TFE(BRD) | 26408 | TFE(BRD) | 26408 | TFE(BRD) | 42 |
| | •PACKING END RING | 1 | 26301 | TFE | 26301 | TFE | 26301 | TFE | 41 |
| R | •PACKING RING | 9 | 26409 | GRAFOIL | 26409 | GRAFOIL | 26409 | GRAFOIL | 42 |

*COMPONENT QUANTITY MAY BE CUMULATIVE OVER ENTIRE B/M
•DENOTES RECOMMENDED SPARE PART

# G8 SERIES PUMP
# CONSOLIDATED B/M

| | | | STANDARD PUMP MATERIAL | | | | | | |
|---|---|---|---|---|---|---|---|---|---|
| | | | 316SS (A) OR (K) | | ALLOY C (C) OR (M) | | ALLOY 20 (D) OR (N) | | |
| DESCRIPTION | | QTY | PART NO | MATL | PART NO | MATL | PART NO | MATL | ITEM |
| POSITION 8 SEAL ARRANGEMENT (CONT'D) | | | | | | | | | |
| INTERNAL MECHANICAL SEAL | | | | | | | | | |
| COMMON PARTS | SEAL HOUSING | 1 | 24518 | ALLOY 20 | 24519 | ALLOY C | 24518 | ALLOY 20 | 30 |
| | GASKET | 1 | 21106 | TFE | 21106 | TFE | 21106 | TFE | 31 |
| | LOCK NUT | 2 | 21602 | 316SS | 21602 | 316SS | 21602 | 316SS | 35 |
| | GLAND NUT | 1 | 21727 | ALLOY 20 | 21726 | ALLOY C | 21727 | ALLOY 20 | 34 |
| | PLUG, 1/8" NPT | *2 | W772565-316 | 316SS | 52301 | ALLOY C | 52300 | ALLOY 20 | 62 |
| K | +SEAL HEAD ASSEMBLY | 1 | 27097 | 020/TFE | 27099 | HC0/TFE | 27097 | 020/TFE | 60 |
| | +SEAL SEAT W/ O-RING (TFE) | 1 | 21563 | ALLOY 20 | 21565 | ALLOY C | 21563 | ALLOY 20 | 55 |
| Q | +SEAL HEAD ASSEMBLY | 1 | 27097 | 020/TFE | 27099 | HC0/TFE | 27097 | 020/TFE | 60 |
| | +SEAL SEAT W/ O-RING (TFE) | 1 | 21571 | SICBD | 21571 | SICBD | 21571 | SICBD | 55 |
| T | +SEAL HEAD ASSEMBLY | 1 | 27089 | 020/CBN | 27090 | HC0/CBN | 27089 | 020/CBN | 60 |
| | +SEAL SEAT W/ O-RING (TFE) | 1 | 21563 | ALLOY 20 | 21565 | ALLOY C | 21563 | ALLOY 20 | 55 |
| U | +SEAL HEAD ASSEMBLY | 1 | 27089 | 020/CBN | 27090 | HC0/CBN | 27089 | 020/CBN | 60 |
| | +SEAL SEAT W/ O-RING (TFE) | 1 | 21571 | SICBD | 21571 | SICBD | 21571 | SICBD | 55 |
| EXTERNAL MECHANICAL SEAL | | | | | | | | | |
| COMMON PARTS | GLAND NUT | 1 | 21727 | ALLOY 20 | 21726 | ALLOY C | 21727 | ALLOY 20 | 34 |
| | LOCK NUT | 1 | 21602 | 316SS | 21602 | 316SS | 21602 | 316SS | 35 |
| V | +SEAL HEAD ASSEMBLY | 1 | 27089 | 020/CBN | 27090 | HC0/CBN | 27089 | ALLOY 20 | 60 |
| | +SEAL SEAT W/ O-RING (TFE) | 1 | 21563 | ALLOY 20 | 21565 | ALLOY C | 21563 | ALLOY 20 | 55 |
| W | +SEAL HEAD ASSEMBLY | 1 | 27089 | 020/CBN | 27090 | HC0/CBN | 27089 | ALLOY 20 | 60 |
| | +SEAL SEAT W/ O-RING (TFE) | 1 | 21571 | SICBD | 21571 | SICBD | 21571 | SICBD | 55 |
| DOUBLE MECHANICAL SEAL | | | | | | | | | |
| COMMON PARTS | SEAL HOUSING | 1 | 24518 | ALLOY 20 | 24519 | ALLOY C | 24518 | ALLOY 20 | 30 |
| | GASKET | 1 | 21106 | TFE | 21106 | TFE | 21106 | TFE | 31 |
| | LOCK NUT | 2 | 21602 | 316SS | 21602 | 316SS | 21602 | 316SS | 35 |
| | GLAND NUT | 1 | 21727 | ALLOY 20 | 21726 | ALLOY C | 21727 | ALLOY 20 | 34 |
| Y | +SEAL HEAD ASSEMBLY | 1 | 27092 | 316/CBN | 27092 | 316/CBN | 27092 | 316/CBN | 60 |
| | +SEAL SEAT W/ O-RING (TFE) | 2 | 21566 | ALLOY 20 | 21568 | ALLOY C | 21566 | ALLOY 20 | 55 |
| EXTERNAL MECHANICAL SEAL FOR VACUUM SERVICE | | | | | | | | | |
| COMMON PARTS | SEAL HOUSING | 1 | 24518 | ALLOY 20 | 24519 | ALLOY C | 24518 | ALLOY 20 | 30 |
| | GASKET | 1 | 21106 | TFE | 21106 | TFE | 21106 | TFE | 31 |
| | LOCK NUT | 2 | 21602 | 316SS | 21602 | 316SS | 21602 | 316SS | 35 |
| | GLAND NUT | 1 | 21727 | ALLOY 20 | 21726 | ALLOY C | 21727 | ALLOY 20 | 34 |
| | PLUG, 1/8" NPT | *1 | W772565-316 | 316SS | 52301 | ALLOY C | 52300 | ALLOY 20 | 62 |
| Z | +SEAL HEAD ASSEMBLY | 1 | 27089 | 020/CBN | 27090 | HC0/CBN | 27089 | 020/CBN | 60 |
| | +SEAL SEAT W/ O-RING (TFE) | 1 | 21563 | ALLOY 20 | 21565 | ALLOY C | 21563 | ALLOY 20 | 55 |

*COMPONENT QUANTITY MAY BE CUMULATIVE OVER ENTIRE B/M
+DENOTES RECOMMENDED SPARE PART

# GH8 SERIES PUMP
# CONSOLIDATED B/M

| DESCRIPTION | QTY | STANDARD PUMP MATERIAL: 316SS (A) OR (K) PART NO | 316SS MATL | ALLOY C (C) OR (M) PART NO | ALLOY C MATL | ALLOY 20 (D) OR (N) PART NO | ALLOY 20 MATL | ITEM |
|---|---|---|---|---|---|---|---|---|
| POSITION 3 STANDARD PUMP - NON-VARIABLE COMPONENTS | | | | | | | | |
| HOUSING, FRONT - MECH SEAL | 1 | 40150 | 316SS | 40151 | ALLOY C | 40152 | ALLOY 20 | 1 |
| HOUSING, FRONT - LRS SEAL | 1 | 40153 | 316SS | 40154 | ALLOY C | 40155 | ALLOY 20 | 1 |
| HOUSING, CENTER FNPT | 1 | 40052 | 316SS | 40053 | ALLOY C | 40054 | ALLOY 20 | 2 |
| HOUSING, CENTER FBSPT | 1 | 40064 | 316SS | 40065 | ALLOY C | 40066 | ALLOY 20 | 2 |
| HOUSING, REAR | 1 | 40247 | 316SS | 40248 | ALLOY C | 40249 | ALLOY 20 | 3 |
| +SHAFT, DRIVE | 1 | 41327 | 316SS | 41328 | ALLOY C | 41329 | ALLOY 20 | 4 |
| +SHAFT IDLER 5/8" | 1 | 41337 | 316SS | 41338 | ALLOY C | 41339 | ALLOY 20 | 5 |
| +SHAFT, IDLER (METAL) 3/4" | 1 | 41342 | 316SS | 41343 | ALLOY C | 41344 | ALLOY 20 | 5 |
| +RING, RETAINING 5/8" | 0-2 | Y9901400-020 | ALLOY 20 | Y9901400-HC0 | ALLOY C | Y9901400-020 | ALLOY 20 | 11 |
| +RING, RETAINING 3/4" | 2-4 | 46710 | ALLOY 20 | 46711 | ALLOY C | 46710 | ALLOY 20 | 10 |
| +KEY, METAL DRIVE GEAR | *2 | 41905 | ALLOY 20 | 41903 | ALLOY C | 41905 | ALLOY 20 | 8 |
| +KEY, MTL/CBN IDLER GEAR | *2 | 41905 | ALLOY 20 | 41903 | ALLOY C | 41905 | ALLOY 20 | 9 |
| +KEY, PLASTIC IDLER GEAR | *2 | 41906 | ALLOY 20 | 41904 | ALLOY C | 41906 | ALLOY 20 | 9 |
| +KEY COUPLING | 1 | W773098-008 | STL | W773098-008 | STL | W773098-008 | STL | 21 |
| +PIN, BEARING LOCK | 4 | 41811 | TFE | 41811 | TFE | 41811 | TFE | 14 |
| +O-RING, HOUSING | 2 | 41101 | TFE | 41101 | TFE | 41101 | TFE | 16 |
| PIN, HOUSING | 4 | 40801 | 316SS | 40801 | 316SS | 40801 | 316SS | 17 |
| BOLT, HOUSING | 4 | 62006 | 188SS | 62006 | 188SS | 62006 | 188SS | 18A |
| NUT,HOUSING BOLT | 4 | 62101 | 188SS | 62101 | 188SS | 62101 | 188SS | 19 |
| NAMEPLATE | 1 | 41210 | 188SS | 41210 | 188SS | 41210 | 188SS | -- |
| NON-VARIABLE COMPONENTS FOR POSITION 9 OPTIONAL PUMPS | | | | | | | | |
| POSITION 9 OPTIONS - DELETE CORRESPONDING STANDARD PUMP COMPONENT FROM B/M | | | | | | | | |
| V: HOUSING, CENTER - VENT FNPT | 1 | 40052-2 | 316SS | 40053-2 | ALLOY C | 40054-2 | ALLOY 20 | 2 |
| V: HOUSING, CENTER - VENT FBSPT | | 40064-2 | 316SS | 40065-2 | ALLOY C | 40066-2 | ALLOY 20 | 2 |
| V: PLUG, 1/8" NPT | *1 | W772565-316 | 316SS | 52301 | ALLOY C | 52300 | ALLOY 20 | 62 |
| C, A: HOUSING, FRONT MECH - BRG FLUSH | 1 | 40150-2 | 316SS | 40151-2 | ALLOY C | 40152-2 | ALLOY 20 | 1 |
| C, A: HOUSING, FRONT LRS - BRG FLUSH | 1 | 40153-2 | 316SS | 40154-2 | ALLOY C | 40155-2 | ALLOY 20 | 1 |
| C, A: HOUSING, REAR - BRG FLUSH | 1 | 40247-2 | 316SS | 40248-2 | ALLOY C | 40249-2 | ALLOY 20 | 3 |
| C, A: PLUG, 1/8" NPT | *3 | W772565-316 | 316SS | 52301 | ALLOY C | 52300 | ALLOY 20 | 62 |
| C, B: +PIN, BEARING LOCK | 4 | 41812 | 316SS | 41813 | ALLOY C | 41814 | ALLOY 20 | 14 |
| C, B: +O-RING, HOUSING | 2 | 41107 | SS/PFA | 41107 | SS/PFA | 41107 | SS/PFA | 16 |
| D: +BEARING, SLOTTED 3/4" | 2-4 | 40443 | TFE(GF) | 40443 | TFE(GF) | 40443 | TFE(GF) | 12 |
| D: +BEARING, SLOTTED 3/4" | 2-4 | 40442 | CARBON | 40442 | CARBON | 40442 | CARBON | 12 |
| D: +BEARING, SLOTTED 5/8" | 0-2 | 40440 | CARBON | 40440 | CARBON | 40440 | CARBON | 13 |
| D: +BEARING, SLOTTED 5/8" | 0-2 | 40441 | TFE(GF) | 40441 | TFE(GF) | 40441 | TFE(GF) | 13 |

* COMPONENT QUANTITY MAY BE CUMULATIVE OVER ENTIRE B/M
+ DENOTES RECOMMENDED SPARE PART

# GH8 SERIES PUMP
# CONSOLIDATED B/M

| | | | STANDARD PUMP MATERIAL | | | | | | |
|---|---|---|---|---|---|---|---|---|---|
| | | | 316SS (A) OR (K) | | ALLOY C (C) OR (M) | | ALLOY 20 (D) OR (N) | | |
| | DESCRIPTION | QTY | PART NO | MATL | PART NO | MATL | PART NO | MATL | ITEM |
| POSITION 4 & 5 DRIVE AND IDLER GEAR MATERIAL | | | | | | | | | |
| C | +GEAR DRIVE/IDLER 3/4" | 1-2 | 40605 | ALLOY C | 40605 | ALLOY C | 40605 | ALLOY C | 6,7 |
| K | +GEAR, IDLER 5/8" | 0-1 | 40606 | CARBON | 40606 | CARBON | 40606 | CARBON | 7 |
| T | +GEAR, IDLER 5/8" | | 40608 | TFE(GF) | 40608 | TFE(GF) | 40608 | TFE(GF) | 7 |
| E | +GEAR, IDLER 5/8" | | 40609 | PEEK | 40609 | PEEK | 40609 | PEEK | 7 |
| POSITION 6 WEAR PLATE MATERIAL | | | | | | | | | |
| K | +WEAR PLATE, SLOTTED | 4 | 40511 | CARBON | 40511 | CARBON | 40511 | CARBON | 15 |
| T | +WEAR PLATE, SLOTTED | | 40513 | TFE(GF) | 40513 | TFE(GF) | 40513 | TFE(GF) | 15 |
| Z | +WEAR PLATE, SLOTTED | | 40525 | CERAMIC | 40525 | CERAMIC | 40525 | CERAMIC | 15 |
| E | +WEAR PLATE, SLOTTED | | 40526 | PEEK | 40526 | PEEK | 40526 | PEEK | 15 |
| POSITION 7 BEARING MATERIAL | | | | | | | | | |
| K | +BEARING, DRIVE/IDLER SHAFT 3/4" | 2-4 | 40436 | CARBON | 40436 | CARBON | 40436 | CARBON | 12 |
| | +BEARING, IDLER SHAFT 5/8" | 0-2 | 40432 | CARBON | 40432 | CARBON | 40432 | CARBON | 13 |
| T | +BEARING, DRIVE/IDLER SHAFT 3/4" | 2-4 | 40438 | TFE(GF) | 40438 | TFE(GF) | 40438 | TFE(GF) | 12 |
| | +BEARING IDLER SHAFT 5/8 | 0-2 | 40434 | TFE(GF) | 40434 | TFE(GF) | 40434 | TFE(GF) | 13 |
| POSITION 8 SEAL ARRANGEMENT | | | | | | | | | |
| LANTERN RING STUFFING BOX | | | | | | | | | |
| COMMON PARTS | PACKING GLAND | 1 | 21572 | 316SS | 21573 | ALLOY C | 21574 | ALLOY 20 | 38 |
| | +RING, LANTERN | 1 | 27112 | TFE(GF) | 27112 | TFE(GF) | 27112 | TFE(GF) | 46 |
| | STUD, PACKING GLAND | 2 | 92014 | ALLOY 20 | 92012 | ALLOY C | 91014 | ALLOY 20 | 39 |
| | NUT, STUD | 2 | 92103 | ALLOY 20 | 92102 | ALLOY C | 92103 | ALLOY 20 | 40 |
| | GREASE FITTING 1/8" NPT | 1 | 27201 | 310SS | 27201 | 310SS | 27201 | 310SS | 65 |
| | PLUG, 1/8" NPT | *2 | W772565-316 | 316SS | 52301 | ALLOY C | 52300 | ALLOY 20 | 62 |
| 13 | +RING, PACKING | 8 | 26144 | TFE | 26144 | TFE | 26144 | TFE | 42 |
| | +END RING, PACKING | 1 | 26303 | TFE | 26303 | TFE | 26303 | TFE | 41 |
| 15 | +RING, PACKING | 9 | 26415 | GRAFOIL | 26415 | GRAFOIL | 26415 | GRAFOIL | 42 |
| INTERNAL MECHANICAL SEAL | | | | | | | | | |
| COMMON PARTS | RETAINER, SEAT | 1 | 21752 | 316SS | 21753 | ALLOY C | 21754 | ALLOY 20 | 36 |
| | SCREW, RETAINER | 2 | W770412-188 | 188SS | W770412-188 | 188SS | W770412-188 | 188SS | 39A |
| | +O RING, SEAT RETAINER | 1 | W212170-TFE | TFE | W212170-TFE | TFE | W212170-TFE | TFE | 37 |
| | PLUG, 1/8" NPT | *3 | W772565-316 | 316SS | 52301 | ALLOY C | 52300 | ALLOY 20 | 62 |
| Q | +HEAD ASSEMBLY, SEAL | 1 | 27187 | 316/TFE | 27189 | HCO/TFE | 27188 | 020/TFE | 60 |
| | +SEAT, SEAL W/ TFE RING | 1 | 21575 | SICBD | 21575 | SICBD | 21575 | SICBD | 55 |
| U | +HEAD ASSEMBLY, SEAL | 1 | 27181 | 316/CBN | 27182 | HCO/CBN | 27186 | 020/CBN | 60 |
| | +SEAT, SEAL W/ TFE RING | 1 | 21575 | SICBD | 21575 | SICBD | 21575 | SICBD | 55 |
| DOUBLE MECHANICAL SEAL | | | | | | | | | |
| E | RETAINER, SEAT | 1 | 21752 | 316SS | 21753 | ALLOY C | 21754 | ALLOY 20 | 36 |
| | SCREW, RETAINER | 2 | W770412-188 | 188SS | W770412-188 | 188SS | W770412-188 | 188SS | 39A |
| | +O RING, SEAT RETAINER | 1 | W212170-TFE | TFE | W212170-TFE | TFE | W212170-TFE | TFE | 37 |
| | PLUG, 1/8" NPT | *1 | W772565-316 | 316SS | 52301 | ALLOY C | 52300 | ALLOY 20 | 62 |
| | +HEAD ASSEMBLY, SEAL | 1 | 27183 | 316/CBN | 27183 | 316/CBN | 27183 | 316/CBN | 60 |
| | +SEAT, SEAL W/ TFE RING | 2 | 21575 | SICBD | 21575 | SICBD | 21575 | SICBD | 55 |

* COMPONENT QUANTITY MAY BE CUMULATIVE OVER ENTIRE B/M
+ DENOTES RECOMMENDED SPARE PART

# GA12 SERIES PUMP
# CONSOLIDATED B/M

| | | | STANDARD PUMP MATERIAL | | | | | | |
|---|---|---|---|---|---|---|---|---|---|
| | | | 316SS (A, K, OR U) | | ALLOY C (C, M, OR V) | | ALLOY 20 (D, N, OR W) | | |
| | DESCRIPTION | QTY | PART NO | MATL | PART NO | MATL | PART NO | MATL | ITEM |
| POSITION 3 STANDARD PUMP - NON-VARIABLE COMPONENTS | | | | | | | | | |
| | HOUSING, FRONT - MECH SEAL | 1 | 90129 | 316SS | 90130 | ALLOY C | 90131 | ALLOY 20 | 1 |
| | HOUSING, FRONT - LRS SEAL | | 90138 | 316SS | 90140 | ALLOY C | 90139 | ALLOY 20 | 1 |
| | HOUSING, CENTER FNPT | 1 | 90001 | 316SS | 90006 | ALLOY C | 90005 | ALLOY 20 | 2 |
| | HOUSING, CENTER FBSPT | | 90012 | 316SS | 90013 | ALLOY C | 90014 | ALLOY 20 | 2 |
| | HOUSING, CENTER FLGD | | 90003 | 316SS | 90007 | ALLOY C | 90010 | ALLOY 20 | 2 |
| | HOUSING, REAR | 1 | 90201 | 316SS | 90205 | ALLOY C | 90204 | ALLOY 20 | 3 |
| | *SHAFT, MTL DRIVE GR 1" DIA | 1 | 90307 | 316SS | 90317 | ALLOY C | 90315 | ALLOY 20 | 4 |
| | *SHAFT, IDLER 3/4" DIA | 1 | 90306 | 316SS | 90322 | ALLOY C | 90334 | ALLOY 20 | 5 |
| | *SHAFT, CBN IDLER GR 3/4" DIA | | 90346 | 316SS | 90347 | ALLOY C | 90348 | ALLOY 20 | 5 |
| | *RING, RETAINING - DR/IDLR 1" | 2-4 | 96702 | 316SS | 96708 | ALLOY C | 96708 | ALLOY C | 10 |
| | *RING, RETAINING - IDLER 3/4" | 0-2 | 96701 | 316SS | 96709 | ALLOY C | 96709 | ALLOY C | 11 |
| | *KEY, DRIVE/IDLER GR 1" BORE | 1-2 | 91904 | 316SS | 91910 | ALLOY C | 91910 | ALLOY C | 8,9 |
| | *KEY, MTL IDLER GR 3/4" BORE | 0-1 | 91903 | 316SS | 91911 | ALLOY C | 91911 | ALLOY C | 9 |
| | *KEY, CBN IDLER GR 3/4" BORE | 0-2 | 91925 | 316SS | 91926 | ALLOY C | 91926 | ALLOY C | 9 |
| | *KEY, PLSTC IDL GR 3/4" BORE | 0-2 | 91901 | 316SS | 91912 | ALLOY C | 91912 | ALLOY C | 9 |
| | *PIN, BEARING LOCK | #4 | 90801 | 316SS | 90803 | ALLOY C | 90803 | ALLOY C | 14 |
| | *O-RING, HOUSING | 2 | 91101 | TFE | 91101 | TFE | 91101 | TFE | 16 |
| | PIN, HOUSING | #4 | 90801 | 316SS | 90801 | 316SS | 90801 | 316SS | 17 |
| | BOLT, CTR HSG FNPT, FBSPT | #10 | W770413-188 | 188SS | W770413-188 | 188SS | W770413-188 | 188SS | 18A |
| | BOLT, CTR HSG FNPT, FBSPT | 1 | W770422-188 | 188SS | W770422-188 | 188SS | W770422-188 | 188SS | 18A |
| | NUT, HSG BOLT FNPT, FBSPT | 11 | W771214-188 | 188SS | W771214-188 | 188SS | W771214-188 | 188SS | 19 |
| | LOCK WASHER FNPT, FBSPT | 11 | W771107-188 | 188SS | W771107-188 | 188SS | W771107-188 | 188SS | 20 |
| | BOLT, CENTER HSG FLGD | 12 | W770412-188 | 188SS | W770412-188 | 188SS | W770412-188 | 188SS | 18A |
| | LOCK WASHER FLGD | 12 | W771107-188 | 188SS | W771107-188 | 188SS | W771107-188 | 188SS | 20 |
| | PLUG, 1/4" NPT | #4 | 16432 | ALLOY 20 | 16422 | ALLOY C | 16432 | ALLOY 20 | 63 |
| | KEY, COUPLING/DRIVE SHAFT | 1 | 91924 | STL | 91924 | STL | 91924 | STL | 21 |
| | PLUG, 1/8" NPT | **1 | W772565-316 | 316SS | 52301 | ALLOY C | 52300 | ALLOY 20 | 62 |
| | NAMEPLATE | 1 | 41201 | 188SS | 41201 | 188SS | 41201 | 188SS | -- |
| NON-VARIABLE COMPONENTS FOR POSITION 9 OPTIONAL PUMPS | | | | | | | | | |
| POSITION 9 OPTIONS - DELETE CORRESPONDING STANDARD PUMP COMPONENT FROM B/M | | | | | | | | | |
| V | HOUSING, CENTER - VENT FNPT | 1 | 90001-2 | 316SS | 90006-2 | ALLOY C | 90005-2 | ALLOY 20 | 2 |
| | HOUSING, CENTER - VENT FBSPT | | 90012-2 | 316SS | 90013-2 | ALLOY C | 90014-2 | ALLOY 20 | 2 |
| | HOUSING, CENTER - VENT FLGD | | 90003-2 | 316SS | 90007-2 | ALLOY C | 90010-2 | ALLOY 20 | 2 |
| | PLUG, 1/8" NPT | *1 | W772565-316 | 316SS | 52301 | ALLOY C | 52300 | ALLOY 20 | 62 |
| B | *O-RING, HOUSING | 2 | 91106 | SS/PFA | 91106 | SS/PFA | 91106 | SS/PFA | 16 |
| J | *SHAFT, MTL IDLER GR 1" DIA | 1 | 90308 | 316SS | 90318 | ALLOY C | 90364 | ALLOY 20 | 5 |
| POSITION 4 & 5 DRIVE AND IDLER GEAR | | | | | | | | | |
| C | *GEAR, DRIVE/IDLER 1" BORE | 1-2 | 90627 | ALLOY C | 90627 | ALLOY C | 90627 | ALLOY C | 6,7 |
| | *GEAR, IDLER 3/4" BORE | 0-1 | 90626 | ALLOY C | 90626 | ALLOY C | 90626 | ALLOY C | 7 |
| K | *GEAR, IDLER 3/4" BORE | 0-1 | 90664 | CARBON | 90664 | CARBON | 90664 | CARBON | 7 |
| T | *GEAR, IDLER 3/4" BORE | | 90663 | TFE(GF) | 90663 | TFE(GF) | 90663 | TFE(GF) | 7 |
| E | *GEAR, IDLER 3/4" BORE | | 90677 | PEEK | 90677 | PEEK | 90677 | PEEK | 7 |

*COMPONENT QUANTITY MAY BE CUMULATIVE OVER ENTIRE B/M

**QTY (2) WHEN PUMP HAS FNPT OR FBSPT CENTER HOUSING, COMPONENT QUANTITY MAY BE CUMULATIVE OVER ENTIRE B/M

+DENOTES RECOMMENDED SPARE PART

# GA12 SERIES PUMP
# CONSOLIDATED B/M

| | | | STANDARD PUMP MATERIAL | | | | | | |
|---|---|---|---|---|---|---|---|---|---|
| | | | 316SS (A, K, OR U) | | ALLOY C (C, M, OR V) | | ALLOY 20 (D, N, OR W) | | |
| DESCRIPTION | | QTY | PART NO | MATL | PART NO | MATL | PART NO | MATL | ITEM |
| POSITION 6 WEAR PLATE MATERIAL | | | | | | | | | |
| K | •WEAR PLATE, SLOTTED | 4 | 90503 | CARBON | 90503 | CARBON | 90503 | CARBON | 15 |
| T | •WEAR PLATE, SLOTTED | | 90510 | TFE(GF) | 90510 | TFE(GF) | 90510 | TFE(GF) | 15 |
| Z | •WEAR PLATE, SLOTTED | | 90512 | CERAMIC | 90512 | CERAMIC | 90512 | CERAMIC | 15 |
| POSITION 7 BEARING MATERIAL | | | | | | | | | |
| K | •BEARING 1" BORE | 2-4 | 90424 | CARBON | 90424 | CARBON | 90424 | CARBON | 12,13 |
| | •BEARING 3/4" BORE | 0-2 | 90429 | CARBON | 90429 | CARBON | 90429 | CARBON | 13 |
| T | •BEARING 1" BORE | 2-4 | 90428 | TFE(GF) | 90428 | TFE(GF) | 90428 | TFE(GF) | 12,13 |
| | •BEARING 3/4" BORE | 0-2 | 90430 | TFE(GF) | 90430 | TFE(GF) | 90430 | TFE(GF) | 13 |
| 4 | •BEARING, SLOTTED 1" BORE | 2-4 | 90431 | CARBON | 90431 | CARBON | 90431 | CARBON | 12,13 |
| | •BEARING, SLOTTED 3/4" BORE | 0-2 | 90432 | CARBON | 90432 | CARBON | 90432 | CARBON | 13 |
| POSITION 8 SEAL ARRANGEMENT | | | | | | | | | |
| LANTERN RING STUFFING BOX | | | | | | | | | |
| COMMON PARTS | PACKING GLAND | 1 | A91515 | ALLOY 20 | A91517 | ALLOY C | A91515 | ALLOY 20 | 38 |
| | LANTERN RING | 1 | 97105 | ALLOY 20 | 97105 | ALLOY C | 97104 | ALLOY 20 | 46 |
| | STUD PACKING GLAND | 2 | 92014 | ALLOY 20 | 92012 | ALLOY C | 92014 | ALLOY 20 | 39 |
| | NUT STUD | *2 | 92103 | ALLOY 20 | 92102 | ALLOY C | 92103 | ALLOY 20 | 40 |
| | GREASE FITTING | 1 | 27201 | 310SS | 27201 | 310SS | 27201 | 310SS | 65 |
| | PLUG, 1/4" NPT | *1 | 16432 | ALLOY 20 | 16422 | ALLOY C | 16432 | ALLOY 20 | 63 |
| | ADAPTOR 1/4" TO 1/8" NPT | 1 | 27217 | ALLOY 20 | 27216 | ALLOY C | 27217 | ALLOY 20 | 64 |
| 13 | •PACKING RING | 6 | 96515 | TFE(BRD) | 96515 | TFE(BRD) | 96515 | TFE(BRD) | 42 |
| | •PACKING END RING | 1 | 96505 | TFE | 96505 | TFE | 96505 | TFE | 41 |
| 15 | •PACKING RING | 7 | 96510 | GRAFOIL | 96510 | GRAFOIL | 96510 | GRAFOIL | 42 |
| INTERNAL MECHANICAL SEAL | | | | | | | | | |
| COMMON PARTS | SEAT RETAINER W/ PIN | 1 | A91564 | ALLOY 20 | A91560 | ALLOY C | A91564 | ALLOY 20 | 36 |
| | BOLT, SEAT RETAINER | *2 | W770413-188 | 188SS | 92007 | ALLOY C | W770413-188 | 188SS | 39A |
| | O-RING SEAT RETAINER | 1 | 19031 | TFE | 19031 | TFE | 19031 | TFE | 37 |
| | PLUG, 1/4" NPT | *3 | 16432 | ALLOY 20 | 16422 | ALLOY C | 16432 | ALLOY 20 | 63 |
| | •SEAL HEAD ASSEMBLY | 1 | A97011 | 020/CBN | A97023 | HC0/CBN | A97011 | 020/CBN | 60 |
| 22 | •SEAL SEAT W/ SEAL RING (TFE) | 1 | A97044 | CER 99% | A97044 | CER 99% | A97044 | CER 99% | 55 |
| 24 | •SEAL SEAT W/ SEAL RING (TFE) | 1 | A91569 | ALLOY 20 | A91570 | ALLOY C | A91569 | ALLOY 20 | 55 |
| DOUBLE MECHANICAL SEAL | | | | | | | | | |
| COMMON PARTS | SEAT RETAINER W/ PIN | 1 | A91564 | ALLOY 20 | A91560 | ALLOY C | A91564 | ALLOY 20 | 36 |
| | BOLT, SEAT RETAINER | *2 | W770413-188 | 188SS | 92007 | ALLOY C | W770413-188 | 188SS | 39A |
| | O-RING, SEAT RETAINER | 1 | 19031 | TFE | 19031 | TFE | 19031 | TFE | 37 |
| | PLUG, 1/4" NPT | *1 | 16432 | ALLOY 20 | 16422 | ALLOY C | 16432 | ALLOY 20 | 63 |
| | PIN PUMP END SEAT | 1 | 91565 | ALLOY 20 | 91561 | ALLOY C | 91565 | ALLOY 20 | 59 |
| | •SEAL HEAD ASSEMBLY | 1 | A97022 | 020/CBN | A97027 | HC0/CBN | A97022 | 020/CBN | 60 |
| 42 | •SEAL SEAT W/ SEAL RING (TFE) | 2 | A97044 | CER 99% | A97044 | CER 99% | A97044 | CER 99% | 55 |
| 44 | •SEAL SEAT W/ SEAL RING (TFE) | 2 | A91569 | ALLOY 20 | A91570 | ALLOY C | A91569 | ALLOY 20 | 55 |

*COMPONENT QUANTITY MAY BE CUMULATIVE OVER ENTIRE B/M
•DENOTES RECOMMENDED SPARE PART

# GA16 SERIES PUMP
# CONSOLIDATED B/M

| | | | STANDARD PUMP MATERIAL | | | | | | |
|---|---|---|---|---|---|---|---|---|---|
| | | | 316SS (U) | | ALLOY C (V) | | ALLOY 20 (W) | | |
| DESCRIPTION | | QTY | PART NO | MATL | PART NO | MATL | PART NO | MATL | ITEM |
| POSITION 3 STANDARD PUMP - NON-VARIABLE COMPONENTS | | | | | | | | | |
| HOUSING, FRONT - MECH SEAL | | 1 | 90129 | 316SS | 90130 | ALLOY C | 90131 | ALLOY 20 | 1 |
| HOUSING, FRONT - LRS SEAL | | | 90138 | 316SS | 90140 | ALLOY C | 90139 | ALLOY 20 | 1 |
| HOUSING, CENTER | FLGD | 1 | 90020 | 316SS | 90021 | ALLOY C | 90022 | ALLOY 20 | 2 |
| HOUSING, REAR | | 1 | 90201 | 316SS | 90205 | ALLOY C | 90204 | ALLOY 20 | 3 |
| *SHAFT, DRIVE | 1" | 1 | 90355 | 316SS | 90357 | ALLOY C | 90356 | ALLOY 20 | 4 |
| *SHAFT, CBN/PLSTC IDLER | 3/4" | 1 | 90362 | ALLOY 20 | 90361 | ALLOY C | 90362 | ALLOY 20 | 5 |
| *SHAFT, MTL IDLER | 1" | | 90349 | 316SS | 90351 | ALLOY C | 90350 | ALLOY 20 | 5 |
| *RING, RETAINING - DR/IDLER | 1" | 2-4 | 96702 | 316SS | 96708 | ALLOY C | 96708 | ALLOY C | 10,11 |
| *RING, RETAINING - IDLER | 3/4" | 0-2 | 96701 | 316SS | 96709 | ALLOY C | 96709 | ALLOY C | 11 |
| *KEY, MTL DR/IDLER GR | 1" BORE | 2-4 | 91904 | 316SS | 91910 | ALLOY C | 91910 | ALLOY C | 8,9 |
| *KEY, CBN/PLSTC GEAR | 3/4" BORE | 0-2 | 91929 | ALLOY C | 91929 | ALLOY C | 91929 | ALLOY C | 9 |
| *PIN, BEARING LOCK | | *4 | 90801 | 316SS | 90803 | ALLOY C | 90803 | ALLOY C | 14 |
| *O-RING, HOUSING | | 2 | 91101 | TFE | 91101 | TFE | 91101 | TFE | 16 |
| PIN, HOUSING | | *4 | 90801 | 316SS | 90801 | 316SS | 90801 | 316SS | 17 |
| BOLT, CTR HSG | FLGD | 12 | W770412-188 | 188SS | W770412-188 | 188SS | W770412-188 | 188SS | 18A |
| LOCK WASHER | | 12 | W771107-188 | 188SS | W771107-188 | 188SS | W771107-188 | 188SS | 20 |
| PLUG, 1/4" NPT | | *6 | 16432 | ALLOY 20 | 16422 | ALLOY C | 16432 | ALLOY 20 | 63 |
| KEY, COUPLING/DRIVE SHAFT | | 1 | 91924 | STL | 91924 | STL | 91924 | STL | 21 |
| NAMEPLATE | | 1 | 41201 | 188SS | 41201 | 188SS | 41201 | 188SS | -- |
| NON-VARIABLE COMPONENTS FOR POSITION 9 OPTIONAL PUMPS | | | | | | | | | |
| POSITION 9 OPTIONS - DELETE CORRESPONDING STANDARD PUMP COMPONENT FROM B/M | | | | | | | | | |
| B | *O-RING, HOUSING | 2 | 91106 | SS/PFA | 91106 | SS/PFA | 91106 | SS/PFA | 16 |
| POSITION 4 & 5 DRIVE AND IDLER GEAR | | | | | | | | | |
| C | *GEAR, DRIVE/IDLER | 1" BORE | 1-2 | 90667 | ALLOY C | 90667 | ALLOY C | 90667 | ALLOY C | 6,7 |
| K | *GEAR, IDLER | 3/4" BORE | 0-1 | 90676 | CARBON | 90676 | CARBON | 90676 | CARBON | 7 |
| T | *GEAR, IDLER | 3/4" BORE | | 90670 | TFE(GF) | 90670 | TFE(GF) | 90670 | TFE(GF) | 7 |
| E | *GEAR, IDLER | 3/4" BORE | | 90678 | PEEK | 90678 | PEEK | 90678 | PEEK | 7 |
| POSITION 6 WEAR PLATE MATERIAL | | | | | | | | | |
| K | *WEAR PLATE, SLOTTED | | 4 | 90503 | CARBON | 90503 | CARBON | 90503 | CARBON | 15 |
| T | *WEAR PLATE, SLOTTED | | | 90510 | TFE(GF) | 90510 | TFE(GF) | 90510 | TFE(GF) | 15 |
| Z | *WEAR PLATE, SLOTTED | | | 90512 | CERAMIC | 90512 | CERAMIC | 90512 | CERAMIC | 15 |
| POSITION 7 BEARING MATERIAL | | | | | | | | | |
| K | *BEARING | 1" BORE | 2-4 | 90424 | CARBON | 90424 | CARBON | 90424 | CARBON | 12,13 |
| | *BEARING | 3/4" BORE | 0-2 | 90429 | CARBON | 90429 | CARBON | 90429 | CARBON | 13 |
| T | *BEARING | 1" BORE | 2-4 | 90428 | TFE(GF) | 90428 | TFE(GF) | 90428 | TFE(GF) | 12,13 |
| | *BEARING | 3/4" BORE | 0-2 | 90430 | TFE(GF) | 90430 | TFE(GF) | 90430 | TFE(GF) | 13 |
| 4 | *BEARING, SLOTTED | 1" BORE | 2-4 | 90431 | CARBON | 90431 | CARBON | 90431 | CARBON | 12,13 |
| | *BEARING, SLOTTED | 3/4" BORE | 0-2 | 90432 | CARBON | 90432 | CARBON | 90432 | CARBON | 13 |

*COMPONENT QUANTITY MAY BE CUMULATIVE OVER ENTIRE B/M
+DENOTES RECOMMENDED SPARE PART

# GA16 SERIES PUMP
# CONSOLIDATED B/M

| | | | STANDARD PUMP MATERIAL | | | | | | |
|---|---|---|---|---|---|---|---|---|---|
| | | | 316SS (U) | | ALLOY C (V) | | ALLOY 20 (W) | | |
| | DESCRIPTION | QTY | PART NO | MATL | PART NO | MATL | PART NO | MATL | ITEM |
| POSITION 8 SEAL ARRANGEMENT | | | | | | | | | |
| LANTERN RING STUFFING BOX | | | | | | | | | |
| COMMON PARTS | PACKING GLAND | 1 | A91515 | ALLOY 20 | A91517 | ALLOY C | A91515 | ALLOY 20 | 38 |
| | LANTERN RING | 1 | 97104 | ALLOY 20 | 97105 | ALLOY C | 97104 | ALLOY 20 | 46 |
| | STUD, PACKING GLAND | 2 | 92014 | ALLOY 20 | 92012 | ALLOY C | 92014 | ALLOY 20 | 39 |
| | NUT, STUD | 2 | 92103 | ALLOY 20 | 92102 | ALLOY C | 92103 | ALLOY 20 | 40 |
| | GREASE FITTING | 1 | 27201 | 310SS | 27201 | 310SS | 27201 | 310SS | 65 |
| | PLUG, 1/4" NPT | *1 | 16432 | ALLOY 20 | 16422 | ALLOY C | 16432 | ALLOY 20 | 63 |
| | ADAPTOR, 1/4" TO 1/8" NPT | 1 | 27217 | ALLOY 20 | 27216 | ALLOY C | 27217 | ALLOY 20 | 64 |
| 13 | •PACKING RING | 6 | 96515 | TFE(BRD) | 96515 | TFE(BRD) | 96515 | TFE(BRD) | 42 |
| | •PACKING END RING | 1 | 96505 | TFE | 96505 | TFE | 96505 | TFE | 41 |
| 15 | •PACKING RING | 7 | 96510 | GRAFOIL | 96510 | GRAFOIL | 96510 | GRAFOIL | 42 |
| INTERNAL MECHANICAL SEAL | | | | | | | | | |
| COMMON PARTS | SEAT RETAINER W/ PIN | 1 | A91564 | ALLOY 20 | A91560 | ALLOY C | A91564 | ALLOY 20 | 36 |
| | BOLT, SEAT RETAINER | 2 | W770413-188 | 188SS | 92007 | ALLOY C | W770413-188 | 188SS | 39A |
| | O-RING SEAT RETAINER | 1 | 19031 | TFE | 19031 | TFE | 19031 | TFE | 37 |
| | PLUG 1/4" NPT | *3 | 16432 | ALLOY 20 | 16422 | ALLOY C | 16432 | ALLOY 20 | 63 |
| 22 | •SEAL HEAD ASSEMBLY | 1 | A97011 | 020/CBN | A97023 | HC0/CBN | A97011 | 020/CBN | 60 |
| | •SEAL SEAT W/ SEAL RING (TFE) | 1 | A97044 | CER 99% | A97044 | CER 99% | A97044 | CER 99% | 55 |
| 24 | •SEAL HEAD ASSEMBLY | 1 | A97011 | 020/CBN | A97023 | HC0/CBN | A97011 | 020/CBN | 60 |
| | •SEAL SEAT W/ SEAL RING (TFE) | 1 | A91569 | ALLOY 20 | A91570 | ALLOY C | A91569 | ALLOY 20 | 55 |
| DOUBLE MECHANICAL SEAL | | | | | | | | | |
| COMMON PARTS | SEAT RETAINER W/ PIN | 1 | A91564 | ALLOY 20 | A91560 | ALLOY C | A91564 | ALLOY 20 | 36 |
| | BOLT, SEAT RETAINER | 2 | W770413-188 | 188SS | 92007 | ALLOY C | W770413-188 | 188SS | 39A |
| | O-RING, SEAT RETAINER | 1 | 19031 | TFE | 19031 | TFE | 19031 | TFE | 37 |
| | PLUG, 1/4" NPT | *1 | 16432 | ALLOY 20 | 16422 | ALLOY C | 16432 | ALLOY 20 | 63 |
| | PIN PUMP END SEAT | 1 | 91565 | ALLOY 20 | 91561 | ALLOY C | 91565 | ALLOY 20 | 59 |
| 42 | •SEAL HEAD ASSEMBLY | 1 | A97022 | 020/CBN | A97027 | HC0/CBN | A97022 | 020/CBN | 60 |
| | •SEAL SEAT W/ SEAL RING (TFE) | 2 | A97044 | CER 99% | A97044 | CER 99% | A97044 | CER 99% | 55 |
| 44 | •SEAL HEAD ASSEMBLY | 1 | A97022 | 020/CBN | A97027 | HC0/CBN | A97022 | 020/CBN | 60 |
| | •SEAL SEAT W/ SEAL RING (TFE) | 2 | A91569 | ALLOY 20 | A91570 | ALLOY C | A91569 | ALLOY 20 | 55 |

*COMPONENT QUANTITY MAY BE CUMULATIVE OVER ENTIRE B/M
•DENOTES RECOMMENDED SPARE PART

# PERFORMANCE CHARTS

G2

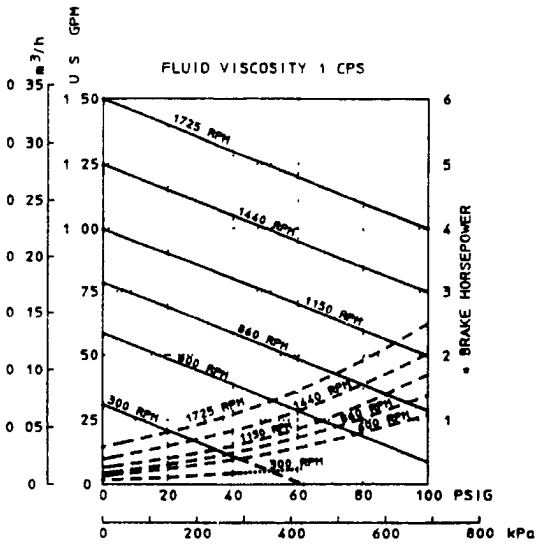


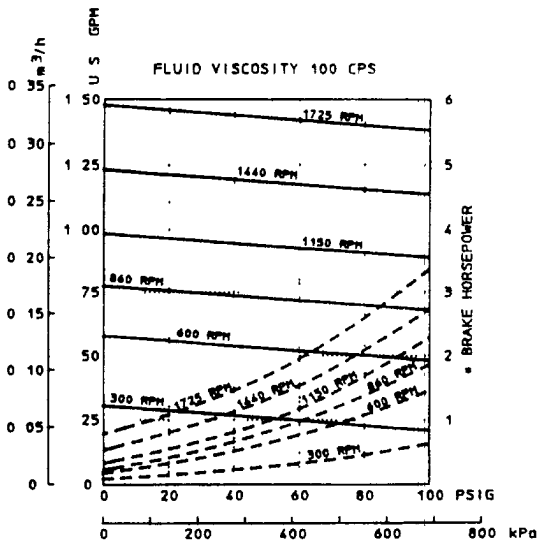


G4

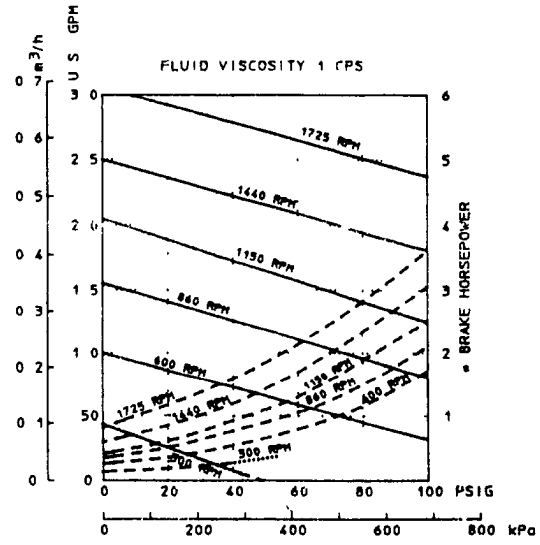


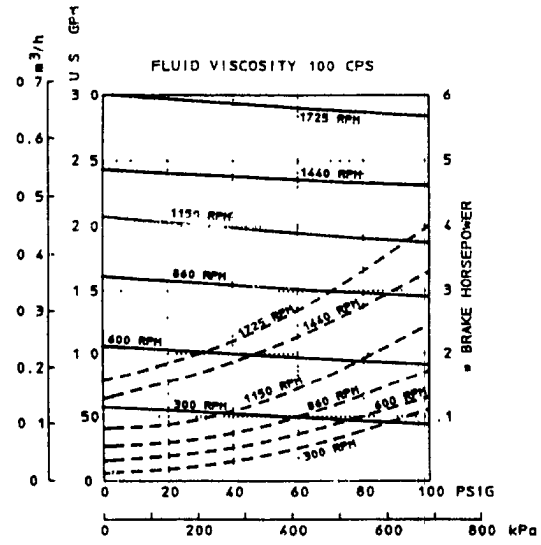


G6

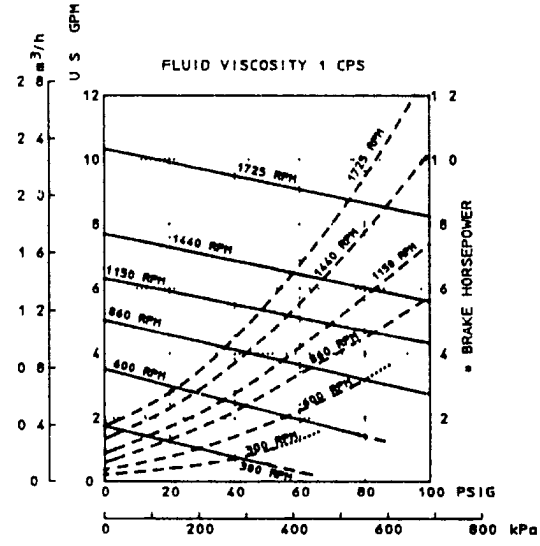


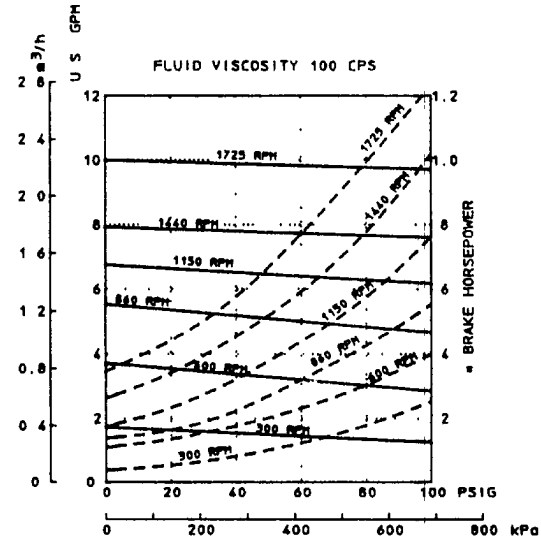


* BRAKE HORSEPOWER SHOWN AS DASHED CURVES

# PERFORMANCE CHARTS

## G8/GH8

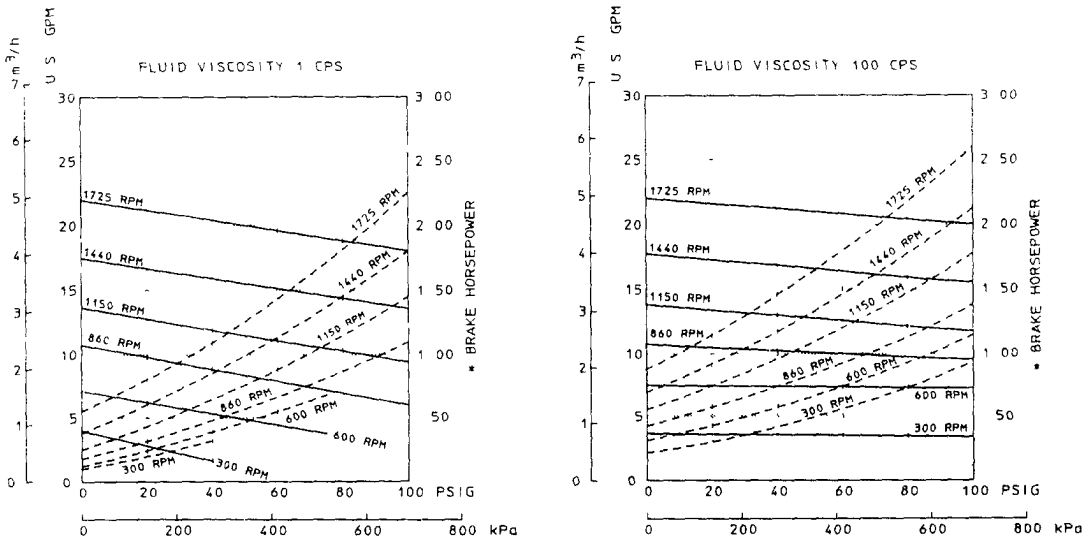


**** NOTE G8 MAXIMUM OPERATING PRESSURE 50 PSIG ****

## GA12

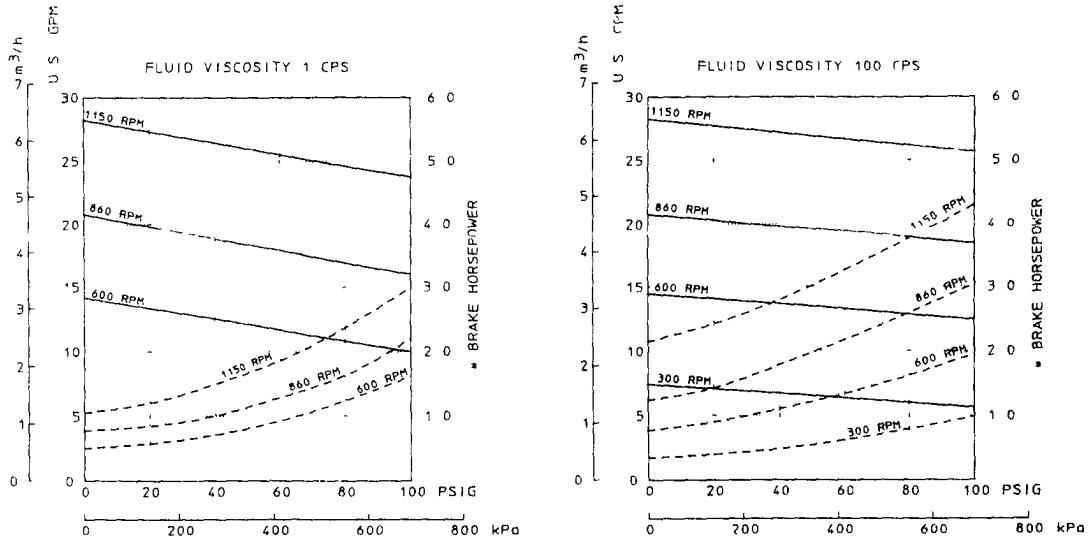


## GA16

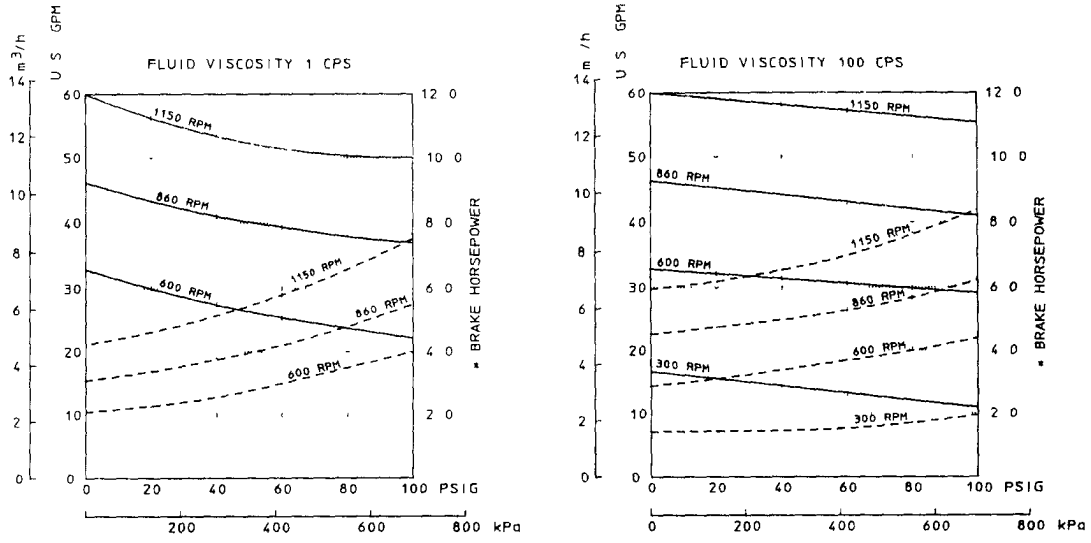


* BRAKE HORSEPOWER SHOWN AS DASHED CURVES



PULSAFEEDER

Printed in U.S.A

IDEX CORPORATION

# PUMP TO MOTOR ASSEMBLY INSTRUCTIONS

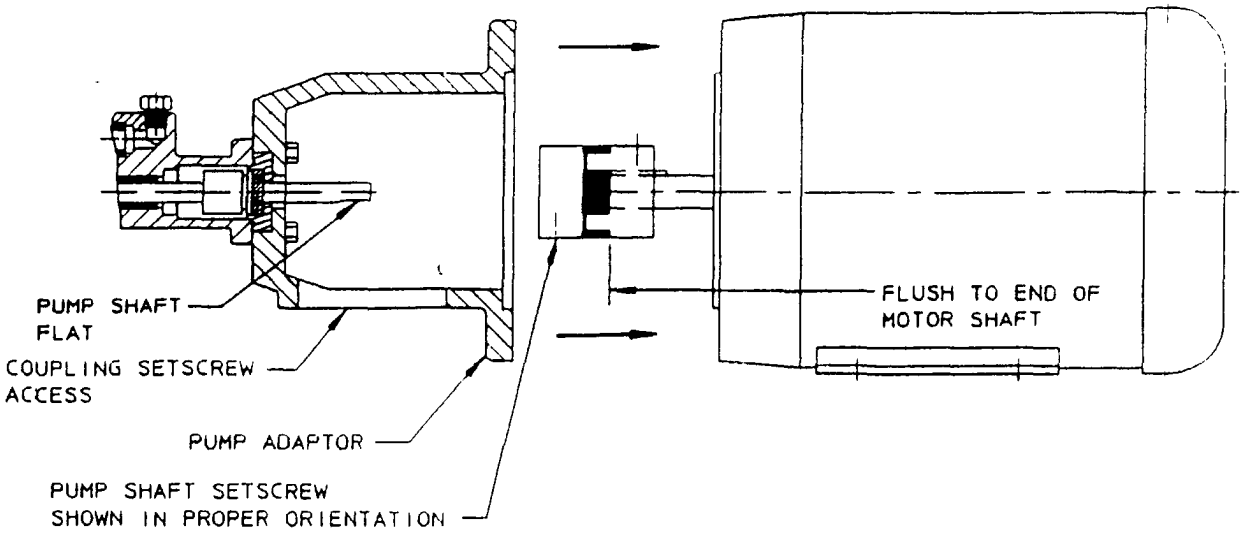


INSTRUCTION:

1.) POSITION PUMP SHAFT FLAT DIRECTLY OVER COUPLING SETSCREW ACCESS.

2.) SETSCREW COUPLING HALF, FLUSH TO END OF MOTOR SHAFT. ASSEMBLE SPIDER AND OTHER COUPLING HALF TO MOTOR HALF (OPTIONAL, WRAP COUPLING JAWS AND SPIDER WITH MASKING TAPE)

3.) SLIDE SHAFT OF PUMP ASSEMBLY INTO COUPLING MOUNTED ON MOTOR. FASTEN PUMP ADAPTOR TO MOTOR WITH BOLTS PROVIDED.

4.) BY USING COUPLING ACCESS IN THE PUMP ADAPTOR, TIGHTEN REMAINING SETSCREW ON COUPLING TO PUMP SHAFT.

NOTE: THIS PRODUCT MAY BE ASSEMBLED IN MORE THAN ONE WAY, BUT WE HAVE DETERMINED THIS PROCEDURE TO BE THE MOST TIME EFFICIENT

# GEARCHEM PUMPS
# PRESSURES TO 100 PSI

## SIGNIFICANT MODEL NUMBER SYSTEM AND AVAILABILITY TABLE

| POSITION NO. | 1 | 2 | 3 | 4 | 5 | 6 | 7 | 8 | 9 |
|---|---|---|---|---|---|---|---|---|---|
| | ☐ | ☐ | ☐ | ☐ | ☐ | ☐ | ☐ | ☐ | ☐ |

**POSITION 1 GEARCHEM EXTERNAL SPUR GEAR PUMP**

| | |
|---|---|
| G = ORIGINAL VERSION, FOOT MOUNTED ONLY | - 2,4,6,8, |
| GA= MECHANICAL SEAL, FOOT MOUNTED ONLY | - 2,4,6,8,12,16 |
| GC= MECHANICAL SEAL, C-FACE MOTOR MOUNTING ASSEMBLY | - 2,4,6,8 |
| GH= HIGHER PRESSURE MODEL, FOOT MOUNTED ONLY * | - 8 |

| POSITION 2 PUMP SIZE | 2 | 4 | 6 | 8 | *8 | 12 | 16 |
|---|---|---|---|---|---|---|---|
| Port Size | 25" | 50" | 75" | 1.00" | 1.00" | 1.50" | 2.00" |
| Capacity (GPM MAX) | 1.5 | 3 | 10 | 20 | 20 | 26 | 55 |
| Differential pressure (PSI MAX) | 100 | 100 | 100 | 50 | 100 | 100 | 100 |
| **POSITION 3 AVAILABLE PUMP METALLURGIES AND TYPE PORT CONNECTION** | | | | | | | |
| A = 316SS FNPT | X | X | X | X | X | X | |
| C = ALLOY C FNPT | X | X | X | X | X | X | |
| D = ALLOY 20 FNPT | X | X | X | X | X | X | |
| K = 316SS FBSPT | X | X | X | X | X | X | |
| M = ALLOY C FBSPT | X | X | X | X | X | X | |
| N = ALLOY 20 FBSPT | X | X | X | X | X | X | |
| U = 316SS FLANGED | | | | | | X | X |
| V = ALLOY C FLANGED | | | | | | X | X |
| W = ALLOY 20 FLANGED | | | | | | X | X |
| **POSITION 4 DRIVE GEAR MATERIAL** | | | | | | | |
| C = ALLOY C | X | X | X | X | X | X | X |
| D = ALLOY 20 | X | X | X | X | | | |
| T = TFE (Glass Filled) (1) | X | X | X | X | | | |
| E = PEEK (1) | X | X | X | X | | | |
| **POSITION 5 IDLER GEAR MATERIAL** | | | | | | | |
| C = ALLOY C (2) | X | X | X | X | X | X | X |
| D = ALLOY 20 (2) | X | X | X | X | | | |
| K = Carbon | X | X | X | X | X | X | X |
| T = TFE (Glass Filled) | X | X | X | X | X | X | X |
| E = PEEK | X | X | X | X | X | X | X |
| **POSITION 6 WEAR PLATE MATERIAL** | | | | | | | |
| K = Carbon | X | X | X | X | X | X | X |
| T = TFE (Glass Filled) | X | X | X | X | X | X | X |
| Z = Ceramic (3) | X | X | X | X | X | X | X |
| E = Peek | X | X | X | X | X | X | X |
| **POSITION 7 SHAFT AND BEARING MATERIAL** | | | | | | | |
| K = Standard Carbon | X | X | X | X | X | X | X |
| T = TFE (Glass Filled) | X | X | X | X | X | X | X |
| L = Extended Life carbon | X | X | X | X | X | X | X |
| C = Extended Life Carbon - "CW" Shafts (14) | X | X | X | X | X | X | X |
| 4 = Standard Carbon - Slotted | | | | | | X | X |

| POSITION 8 SEAL ARRANGEMENT | G 2 - 4 | GA/GC 2 - 4 | G 6 - 8 | GA/GC 6 - 8 | GH *8 | GA 12-16 |
|---|---|---|---|---|---|---|
| PACKING | | | | | | |
| B = TFE Rings | X | | X | | | |
| G = Grafoil Rings | X | | X | | | |
| J = Viton Lip Seal, (4) H-C Spring | X | | X | | | |
| N = TFE Rings / Lantern | X | | X | | X | X |
| R = Grafoil / Lantern | X | | X | | X | X |

* HIGHER PRESSURE MODEL

# GEARCHEM PUMPS
# PRESSURES TO 100 PSI

## SIGNIFICANT MODEL NUMBER SYSTEM AND AVAILABILITY TABLE

(CONTINUED)

| POSITION 8 SEAL ARRANGEMENT | G 2 - 4 | GA/GC 2 - 4 | G 6 - 8 | GA/GC 6 - 8 | GH *8 | GA 12-16 |
|---|---|---|---|---|---|---|
| MECHANICAL SEALS (5) | | | | | | |
| BELLOWS | | | | | | |
| A = Single Seal (13)<br>Carbon Rotary / Viton<br>Ceramic Seat / Viton | | X | | X | | |
| C = Double Seal (6 13)<br>Carbon Rotary / Viton<br>Ceramic Seat / Viton | | X | | X | | |
| P = Single Seal (13)<br>Siliconized Rotary / EPR<br>Silicon CBD Seat / TFE | | X | | X | | |
| WEDGE | | | | | | |
| E = Double Seal (6)<br>Carbon Rotary / TFE<br>Silicon CBD Seat / TFE | | X | | X | X | X |
| Q = Single Seal<br>Teflon Rotary / TFE<br>Silicon CBD Seat / TFE | | X | | X | X | |
| U = Single Seal<br>Carbon Rotary / TFE<br>Silicon CBD Seat / TFE | | X | | X | X | |
| V = External Seal (15)<br>Carbon Rotary / TFE<br>Metallic Seat / TFE | X | | X | | | |
| W = External Seal (15)<br>Carbon Rotary / TFE<br>Silicon CBD Seat / TFE | | | X | | | |
| Z = External Seal - Vacuum<br>Carbon Rotary / TFE (15)<br>Metallic Seat / TFE | X | | X | | | |
| 24 = Single Seal<br>Carbon Rotary / TFE<br>Metallic Seat / TFE | | | | | | X |
| 44 = Double Seal (6)<br>Carbon Rotary / TFE<br>Metallic Seat / TFE | | | | | | X |

| POSITION 9 OPTIONS PUMP SIZE | 2 | 4 | 6 | 8 | *8 | 12 | 16 |
|---|---|---|---|---|---|---|---|
| A = Bearing Flush Ports (7) | X | X | X | X | X | STD | STD |
| B = PFA Coated SS Hsg O-Rings (7)<br>Metallic Bearing Lock Pins | X | X | X | X | X | X | X |
| C = Bearing Flush Ports<br>PFA Coated SS Hsg O-Rings<br>Metallic Bearing Lock Pins | X | X | X | X | X | | |
| D = Bearing Flush Ports,<br>PFA Coated SS Hsg O-Rings<br>Metallic Bearing Lock Pins<br>Slotted Bearings (8) | X | X | X | X | X | | |
| E = Bearing Flush Ports,<br>PFA Coated SS Hsg O-Rings<br>Metallic Bearing Lock Pins<br>Slotted Bearings (8)<br>Slotted Wear Plates (9) | X | X | X | X | | | |
| F = GC Series Only<br>63 Frame Metric Motor | X | X | | | | | |
| G = GC Series Only<br>71 Frame Metric Motor | X | X | X | X | | | |
| J = GA12 with ** Idler Shaft (10)<br>(Metallic Gear Only) | | | | | | X | |
| K = GC Series Only<br>80 Frame Metric Motor | X | X | X | X | | | |
| L = GC Series Only<br>Large Coupling For<br>143T/182C/184C Frame Motors | X | X | X | X | | | |
| M = GC Series Only<br>90 Frame Metric Motor | | | X | X | | | |
| N = Narrow Width Gears (11) | | X | X | | | | |
| T = Temperature Trimmed Plastic Gear | X | X | X | X | X | X | X |
| V = Center Hsg - Vent | X | X | X | X | X | X | STD |
| X = Special (12) | X | X | X | X | X | X | X |

* HIGHER PRESSURE MODEL

# GEARCHEM PUMPS
# PRESSURES TO 100 PSI

## SIGNIFICANT MODEL NUMBER SYSTEM AND AVAILABILITY TABLE

NOTES

(1) Maximum differential pressure allowed for plastic/plastic gears is 50 PSI

(2) Pumps with metallic drive and idler gears require minimum viscosity of 100 cps and are limited to 1440 RPM maximum speed for G2-GH8 pumps and 1150 RPM for GA12-16 pumps

(3) Ceramic wear plates with metallic gears require minimum viscosity of 100 cps

(4) Viton lip seals are limited to 25 PSIG

(5) Not all mechanical seals available in all metallurgies

(6) Double mechanical seals must be pressurized with seal fluid 15 to 20 PSIG above the pump discharge pressure

(7) Standard GA12 and GA16 pumps furnished with bearing flush ports, metallic bearing lock pins, and slotted wear plates

(8) Slotted bearings (GA12 and GA16) listed POSITION 7

(9) Slotted wear plates reduce volumetric efficiency

(10) J OPTION available only with metal idler gear

(11) Designation for reduced capacity pump

(12) Consult Factory

(13) Position 8 option A,C and P seals are only available in 316 stainless steel

(14) "CW" means corrosion/wear shaft material

(15) External seals are limited to 50 PSIG

COMMENTS
Specifications and availability subject to change without notice

# GEARCHEM PUMPS EXTENDED PRESSURE
# PRESSURES ABOVE 100 PSI

## SIGNIFICANT MODEL NUMBER SYSTEM AND AVAILABILITY TABLE

| POSITION NO | 1 | 2 | 3 | 4 | 5 | 6 | 7 | 8 | 9 |
|---|---|---|---|---|---|---|---|---|---|
| **POSITION 1 GEARCHEM EXTERNAL SPUR GEAR PUMP** | | | | | | | | | |
| G = ORIGINAL VERSION FOOT MOUNTED ONLY | | | | | | | | - 2 4 6 | |
| GA= MECHANICAL SEAL FOOT MOUNTED ONLY | | | | | | | | - 2 4 6 | 12 |
| GC= MECHANICAL SEAL C-FACE MOTOR MOUNTING ASSEMBLY | | | | | | | | - 2 4 6 | |
| GH= HIGHER PRESSURE MODEL FOOT MOUNTED ONLY * | | | | | | | | - 6 | |
| **POSITION 2 PUMP SIZE** | | | | 2 | | 4 | 6 | *6 | 12 |
| Port Size | | | | 25" | | 50" | 75" | 75" | 1 50" |
| Capacity (GPM MAX) | | | | 1 5 | | 2 1 | 8 0 | 10 | 26 |
| Differential pressure (PSI MAX) | | | | 175 | | 140+ | 125+ | 200 | 150 |
| **POSITION 3 AVAILABLE PUMP METALLURGIES AND TYPE PORT CONNECTION** | | | | | | | | | |
| A = 316SS | | FNPT | | X | | X | X | X | X |
| C = ALLOY C | | FNPT | | X | | X | X | X | X |
| D = ALLOY 20 | | FNPT | | X | | X | X | X | X |
| K = 316SS | | FBSPT | | X | | X | X | X | X |
| M = ALLOY C | | FBSPT | | X | | X | X | X | X |
| N = ALLOY 20 | | FBSPT | | X | | X | X | X | X |
| U = 316SS | | FLANGED | | | | | | | X |
| V = ALLOY C | | FLANGED | | | | | | | X |
| W = ALLOY 20 | | FLANGED | | | | | | | X |
| **POSITION 4 DRIVE GEAR MATERIAL** | | | | | | | | | |
| C = ALLOY C | | | | X | | X+ | X+ | X | X |
| D = ALLOY 20 | | | | X | | X+ | X+ | | |
| **POSITION 5 IDLER GEAR MATERIAL** | | | | | | | | | |
| C = ALLOY C | | | (2) | X | | X+ | X+ | X | X |
| D = ALLOY 20 | | | (2) | X | | X+ | X+ | | |
| E = PEEK | | | | X | | X+ | X+ | X | X |
| **POSITION 6 WEAR PLATE MATERIAL** | | | | | | | | | |
| K = Carbon | | | | X | | X | X | X | X |
| T = TFE (Glass Filled) | | | | X | | X | X | X | X |
| Z = Ceramic | | | (3) | X | | X | X | X | X |
| E = Peek | | | | X | | X | X | X | X |
| **POSITION 7 SHAFT AND BEARING MATERIAL** | | | | | | | | | |
| K = Standard Carbon | | | | X | | X | X | X | X |
| L = Extended Life carbon | | | | X | | X | X | X | X |
| C = Extended Life Carbon - "CW" Shafts | | | (14) | X | | X | X | X | X |
| 4 = Standard Carbon - Slotted | | | | | | | | | X |

| POSITION 8 SEAL ARRANGEMENT | G 2 - 4 | GA/GC 2 - 4 | G 6 | GA/GC 6 | GM *6 | GA 12 |
|---|---|---|---|---|---|---|
| PACKING | | | | | | |
| B = TFE Rings | X | | X | | | |
| G = Grafoil Rings | X | | X | | | |
| N = TFE Rings / Lantern | X | | X | | X | X |
| R = Grafoil / Lantern | X | | X | | X | X |

+ MODEL REQUIRES OPTION "N" (Narrow Width Gears) IN POSITION 9
* HIGHER PRESSURE MODEL

# GEARCHEM PUMPS EXTENDED PRESSURE
# PRESSURES ABOVE 100 PSI

## SIGNIFICANT MODEL NUMBER SYSTEM AND AVAILABILITY TABLE

(CONTINUED)

| POSITION 8 SEAL ARRANGEMENT | G 2 - 4 | GA/GC 2 - 4 | G 6 | GA/GC 6 | GH *6 | GA 12 |
|---|---|---|---|---|---|---|
| MECHANICAL SEALS (5) | | | | | | |
| BELLOWS | | | | | | |
| A = Single Seal (13)<br>Carbon Rotary / Viton<br>Ceramic Seat / Viton | | X | | X | | |
| C = Double Seal (6 13)<br>Carbon Rotary / Viton<br>Ceramic Seat / Viton | | X | | X | | |
| P = Single Seal (13)<br>Siliconized Rotary / EPR<br>Silicon CBD Seat / TFE | | X | | X | | |
| WEDGE | | | | | | |
| E = Double Seal (6)<br>Carbon Rotary / TFE<br>Silicon CBD Seat / TFE | | X | | X | X | X |
| Q = Single Seal<br>Teflon Rotary / TFE<br>Silicon CBD Seat / TFE | | X | | X | X | |
| U = Single Seal<br>Carbon Rotary / TFE<br>Silicon CBD Seat / TFE | | X | | X | X | X |
| 24 = Single Seal<br>Carbon Rotary / TFE<br>Metallic Seat / TFE | | | | | | X |
| 44 = Double Seal (6)<br>Carbon Rotary / TFE<br>Metallic Seat / TFE | | | | | | X |

| POSITION 9 OPTIONS PUMP SIZE | 2 | *4 | *6 | *6 | 12 |
|---|---|---|---|---|---|
| A = Bearing Flush Ports | X | X | X | X | STD |
| B = PFA Coated SS Hsg O-Rings<br>Metallic Bearing Lock Pins | X | X | X | X | X |
| C = Bearing Flush Ports<br>PFA Coated SS Hsg O-Rings<br>Metallic Bearing Lock Pins | X | X | X | X | |
| D = Bearing Flush Ports<br>PFA Coated SS Hsg O-Rings<br>Metallic Bearing Lock Pins<br>Slotted Bearings (8) | X | X | X | X | |
| E = Bearing Flush Ports<br>PFA Coated SS Hsg O-Rings<br>Metallic Bearing Lock Pins<br>Slotted Bearings (8)<br>Slotted Wear Plates (9) | X | X | X | | |
| F = GC Series Only<br>63 Frame Metric Motors | X | X | | | |
| G = GC Series Only<br>71 Frame Metric Motors | X | X | X | | |
| J = GA12 with 1" Idler Shaft (10)<br>(Metallic Gear Only) | | | | | X |
| K = GC Series Only<br>80 Frame Metric Motors | X | X | X | | |
| L = GC Series Only<br>Large Coupling For<br>143T/182C/184C Frame Motors | X | X | X | | |
| M = GC Series Only<br>90 Frame Metric Motors | | | X | | |
| N = Narrow Width Gears | | REQ | REQ | | |
| V = Center Hsg - Vent | X | X | X | X | X |
| X = Special (12) | X | X | X | X | X |

* MODEL REQUIRES OPTION 'N' (Narrow Width Gears) IN POSITION 9
* HIGHER PRESSURE MODEL

# GEARCHEM PUMPS EXTENDED PRESSURE
# PRESSURES ABOVE 100 PSI

## SIGNIFICANT MODEL NUMBER SYSTEM AND AVAILABILITY TABLE

NOTES

(1) Not applicable

(2) Pumps with metallic drive and idler gears require minimum viscosity of 100 cps and are limited to 1440 RPM maximum speed for G2-GH6 pumps and 1150 RPM for GA12 pump

(3) Ceramic wear plates with metallic gears require minimum viscosity of 100 cps

(4) Not applicable

(5) Not all mechanical seals available in all metallurgies

(6) Double mechanical seals must be pressurized with seal fluid 15 to 20 PSIG above the pump discharge pressure

(7) Standard GA12 pump furnished with bearing flush ports metallic bearing lock pins and slotted wear plates

(8) Slotted bearings (GA12) listed POSITION 7

(9) Slotted wear plates reduce volumetric efficiency

(10) J OPTION available only with metal idler gear

(11) Not applicable

(12) Consult factory

(13) Position 8 option A C and P seals are only available in 316 stainless steel

(14) "CW" means corrosion/wear shaft material

Comments
Specifications and availability subject to change without notice

# GA2/GC2 SERIES PUMP
# CONSOLIDATED B/M

| DESCRIPTION | QTY | STANDARD PUMP MATERIAL: 316SS (A) OR (K) PART NO | 316SS MATL | ALLOY C (C) OR (N) PART NO | ALLOY C MATL | ALLOY 20 (D) OR (N) PART NO | ALLOY 20 MATL | ITEM |
|---|---|---|---|---|---|---|---|---|
| POSITION 3 STANDARD PUMP - NON-VARIABLE COMPONENTS | | | | | | | | |
| HOUSING FRONT | 1 | 70153 | 316SS | 70154 | ALLOY C | 70155 | ALLOY 20 | 1 |
| HOUSING CENTER FNPT | 1 | 70026 | 316SS | 70027 | ALLOY C | 70028 | ALLOY 20 | 2 |
| HOUSING CENTER FBSPT | 1 | 70029 | 316SS | 70030 | ALLOY C | 70031 | ALLOY 20 | 2 |
| HOUSING REAR | 1 | 70214 | 316SS | 70215 | ALLOY C | 70216 | ALLOY 20 | 3 |
| *RING RETAINING | 4 | 76702 | ALLOY 20 | 76701 | ALLOY C | 76702 | ALLOY 20 | 10 11 |
| *RING RETAINING POS 8 OPT A P | 5 | | | | | | | |
| *KEY METAL DRIVE GEAR | *1 | 71910 | ALLOY 20 | 71911 | ALLOY C | 71910 | ALLOY 20 | 8 |
| *KEY PLASTIC DRIVE GEAR | *1 | 71916 | ALLOY 20 | 71917 | ALLOY C | 71916 | ALLOY 20 | 8 |
| *KEY [illegible] | *1 | 71911 | ALLOY 20 | 71911 | ALLOY C | 71910 | ALLOY 20 | 9 |
| *KEY PLASTIC IDLER GEAR | *1 | 71916 | ALLOY 20 | 71917 | ALLOY C | 71916 | ALLOY 20 | 9 |
| *PIN BEARING LOCK | 4 | 41801 | TFE | 41801 | TFE | 41801 | TFE | 14 |
| *O-RING HOUSING | 2 | 61101 | TFE | 61101 | TFE | 61101 | TFE | 16 |
| PIN HOUSING | 4 | 40801 | 316SS | 40801 | 316SS | 40801 | 316SS | 17 |
| BOLT HOUSING | 4 | 72006 | 188SS | 72006 | 188SS | 72006 | 188SS | 18A |
| NUT HOUSING BOLT | 4 | 72101 | 188SS | 72101 | 188SS | 72101 | 188SS | 19 |
| NAMEPLATE | 1 | 41201 | 188SS | 41201 | 188SS | 41201 | 188SS | -- |
| POSITION 4 & 5 DRIVE AND IDLER GEAR | | | | | | | | |
| C *GEAR DRIVE/IDLER | 1-2 | 70672 | ALLOY C | 70672 | ALLOY C | 70672 | ALLOY C | 6 7 |
| D *GEAR DRIVE/IDLER | 1-2 | 70673 | ALLOY 20 | --- | --- | 70673 | ALLOY 20 | 6 7 |
| K *GEAR IDLER | 1 | 70674 | CARBON | 70674 | CARBON | 70674 | CARBON | 7 |
| T *GEAR DRIVE/IDLER | 1-2 | 70675 | TFE(GF) | 70675 | TFE(GF) | 70675 | TFE(GF) | 6 7 |
| E *GEAR DRIVE/IDLER | 1-2 | 70676 | PEEK | 70676 | PEEK | 70676 | PEEK | 6 7 |
| POSITION 6 WEAR PLATE MATERIAL | | | | | | | | |
| K *WEAR PLATE | 4 | 70523 | CARBON | 70523 | CARBON | 70523 | CARBON | 15 |
| T *WEAR PLATE | 4 | 70524 | TFE(GF) | 70524 | TFE(GF) | 70524 | TFE(GF) | 15 |
| Z *WEAR PLATE | 4 | 70525 | CERAMIC | 70525 | CERAMIC | 70525 | CERAMIC | 15 |
| E *WEAR PLATE | 4 | 70534 | PEEK | 70534 | PEEK | 70534 | PEEK | 15 |
| POSITION 7 SHAFT AND BEARING MATERIAL | | | | | | | | |
| STANDARD CONSTRUCTION | | | | | | | | |
| K *BEARING | 5 | 70404 | CARBON | 70404 | CARBON | 70404 | CARBON | 12 13 |
| K *SHAFT DRIVE STD | 1 | 70372 | 316SS | 70373 | ALLOY C | 70374 | ALLOY 20 | 4 |
| K *SHAFT DRIVE POS 8 OPT A P | 1 | 70372-5 | 316SS | 70373-5 | ALLOY C | 70374-5 | ALLOY 20 | 4 |
| K *SHAFT IDLER | 1 | 70378 | 316SS | 70379 | ALLOY C | 70380 | ALLOY 20 | 5 |
| T *BEARING | 1 | 70401 | TFE(GF) | 70401 | TFE(GF) | 70401 | TFE(GF) | 12 |
| T *BEARING | 3 | 70402 | TFE(GF) | 70402 | TFE(GF) | 70402 | TFE(GF) | 12 13 |
| T *SHAFT DRIVE STD | 1 | 70372 | 316SS | 70373 | ALLOY C | 70374 | ALLOY 20 | 4 |
| T *SHAFT DRIVE POS 8 OPT A P | 1 | 70372-5 | 316SS | 70373-5 | ALLOY C | 70374-5 | ALLOY 20 | 4 |
| T *SHAFT IDLER | 1 | 70378 | 316SS | 70379 | ALLOY C | 70380 | ALLOY 20 | 5 |
| EXTENDED LIFE - BEARINGS | | | | | | | | |
| L *BEARING | 5 | 70431 | EWCBN | 70431 | EWCRN | 70431 | EWCBN | 12 13 |
| L *SHAFT DRIVE STD | 1 | 70372 | 316SS | 70373 | ALLOY C | 70374 | ALLOY 20 | 4 |
| L *SHAFT DRIVE POS 8 OPT A P | 1 | 70372-5 | 316SS | 70373-5 | ALLOY C | 70374-5 | ALLOY 20 | 4 |
| L *SHAFT IDLER | 1 | 70378 | 316SS | 70379 | ALLOY C | 70380 | ALLOY 20 | 5 |
| EXTENDED LIFE - BEARINGS AND "CW" SHAFTS | | | | | | | | |
| C *BEARING | 5 | 70431 | EWCBN | 70431 | EWCBN | 70431 | EWCBN | 12 13 |
| C *SHAFT DRIVE STD | 1 | 70372-2 | CW316 | 70373-2 | CWALYC | 70374-2 | CWALY20 | 4 |
| C *SHAFT DRIVE POS 8 OPT A P | 1 | 70372-6 | CW316 | 70373-6 | CWALYC | 70374-6 | CWALY20 | 4 |
| C *SHAFT IDLER | 1 | 70394 | CW316 | 70397 | CWALYC | 70308 | CWALY20 | 5 |

*COMPONENT QUANTITY MAY BE CUMULATIVE OVER ENTIRE B/M
•DENOTES RECOMMENDED SPARE PART

# GA2/GC2 SERIES PUMP
# CONSOLIDATED B/M

| | | | STANDARD PUMP MATERIAL | | | | | | |
|---|---|---|---|---|---|---|---|---|---|
| | | | 316SS (A) OR (K) | | ALLOY C (C) OR (M) | | ALLOY 20 (D) OR (N) | | |
| | DESCRIPTION | QTY | PART NO | MAT. | PART NO | MAT. | PART NO | MAT. | TEM |
| POSITION 8 GA2/GC2 SEAL ARRANGEMENT | | | | | | | | | |
| INTERNAL MECHANICAL SEAL | | | | | | | | | |
| GA2 COMMON PARTS | SEAL RETAINER CODE A E P Q U | 1 | 21759 | 316SS | 21760 | ALLOY C | 21761 | ALLOY 20 | 36 |
| | SEAL RETAINER CODE C | | 21762 | 316SS | 21763 | ALLOY C | 21764 | ALLOY 20 | 36 |
| | •O-RING RETAINER | 1 | W213270-TFE | TFE | W213270-TFE | TFE | W213270-TFE | TFE | 37 |
| | BOLT SEAL RETAINER | 2 | W770401-188 | 188SS | W770401-188 | 188SS | W770401-188 | 188SS | 39A |
| | PLUG 1/8" NPT (NOT REQ E C) | •2 | W772565-316 | 316SS | 52301 | ALLOY C | 52300 | ALLOY 20 | 62 |
| GC2 COMMON PARTS | SEAL RETAINER CODE A E P Q U | 1 | 21765 | 316SS | 21766 | ALLOY C | 21767 | ALLOY 20 | 36 |
| | SEAL RETAINER CODE C | | 21768 | 316SS | 21769 | ALLOY C | 21770 | ALLOY 20 | 36 |
| | •O-RING RETAINER | 1 | W213270-TFE | TFE | W213270-TFE | TFE | W213270-TFE | TFE | 37 |
| | BOLT C-FACE ADAPTOR | 4 | W770403-188 | 188SS | W770403-188 | 188SS | W770403-188 | 188SS | 39A |
| | PLUG 1/8" NPT (NOT REQ C E) | •2 | W772565-316 | 316SS | 52301 | ALLOY C | 52300 | ALLOY 20 | 62 |
| | MOTOR BOLT | 4 | W770425-188 | 188SS | W770425-188 | 188SS | W770425-188 | 188SS | 25 |
| | C-FACE MOTOR ADAPTOR | 1 | 49725 | ALUMINUM | 49725 | ALUMINUM | 49725 | ALUMINUM | 66 |
| | COUPLING L-075 56C FR | 1 | W210369-000 | STEEL | W210369-000 | STEEL | W210369-000 | STEEL | 68 |
| | •ASSEMBLY INSTRUCTIONS | 1 | 20051-A | ----- | 20051-A | ----- | 20051-A | ----- | -- |
| A | •SEAL HEAD ASSEMBLY | 1 | Y0900921-316 | 316/CBN/VTN | ----- | ----- | ----- | ----- | 60 |
| | •SEAL SEAT W/ O-RING (VTN) | 1 | Y1000521-000 | CER/VTN | ----- | ----- | ----- | ----- | 55 |
| C | •SEAL HEAD ASSEMBLY | 2 | Y0900921-316 | 316/CBN/VTN | ----- | ----- | ----- | ----- | 60 |
| | •SEAL SEAT W/ O-RING (VTN) | 2 | Y1000521-000 | CER/VTN | ----- | ----- | ----- | ----- | 55 |
| E | •SEAL HEAD ASSEMBLY | 1 | 77051 | 316/CBN | ----- | ----- | ----- | ----- | 60 |
| | •SEAL SEAT W/ O-RING (TFE) | 2 | Y1000609-000 | SIC/TFE | ----- | ----- | ----- | ----- | 55 |
| P | •SEAL HEAD ASSEMBLY | 1 | Y0901721-316 | 316/PPO/EPR | ----- | ----- | ----- | ----- | 60 |
| | •SEAL SEAT W/ O-RING (TFE) | 1 | Y1000609-000 | SIC/TFE | ----- | ----- | ----- | ----- | 55 |
| Q | •SEAL HEAD ASSEMBLY | 1 | 77033 | 020/TFE | 77034 | HCO/TFE | 77033 | 020/TFE | 60 |
| | •SEAL SEAT W/ O-RING (TFE) | 1 | Y1000609-000 | SIC/TFE | Y1000609-000 | SIC/TFE | Y1000609-000 | SIC/TFE | 55 |
| U | •SEAL HEAD ASSEMBLY | 1 | 77036 | 020/CBN | 77037 | HCO/CBN | 77036 | 020/CBN | 60 |
| | •SEAL SEAT W/ O-RING (TFE) | 1 | Y1000609-000 | SIC/TFE | Y1000609-000 | SIC/TFE | Y1000609-000 | SIC/TFE | 55 |
| EXTERNAL MECHANICAL SEAL | | | | | | | | | |
| GA2 COMMON PARTS | SEAL RETAINER | 1 | 21783 | 316SS | 21784 | ALLOY C | 21785 | ALLOY 20 | 36 |
| | BOLT SEAL RETAINER | 2 | W770403-188 | 188SS | W770403-188 | 188SS | W770403-188 | 188SS | 39A |
| | PLUG 1/8" NPT | •2 | W772565-316 | 316SS | 52301 | ALLOY C | 52300 | ALLOY 20 | 62 |
| GC2 COMMON PARTS | BOLT C-FACE ADAPTOR | 4 | W770403-188 | 188SS | W770403-188 | 188SS | W770403-188 | 188SS | 39A |
| | PLUG 1/8" NPT | •2 | W772565-316 | 316SS | 52301 | ALLOY C | 52300 | ALLOY 20 | 62 |
| | MOTOR BOLT | 4 | W770425-188 | 188SS | W770425-188 | 188SS | W770425-188 | 188SS | 25 |
| | C-FACE MOTOR ADAPTOR | 1 | 49725 | ALUMINUM | 49725 | ALUMINUM | 49725 | ALUMINUM | 66 |
| | COUPLING L-075 56C FR | 1 | W210369-000 | STEEL | W210369-000 | STEEL | W210369-000 | STEEL | 68 |
| | ASSEMBLY INSTRUCTIONS | 1 | 20051-A | ----- | 20051-A | ----- | 20051-A | ----- | -- |
| V | •SEAL HEAD ASSEMBLY | 1 | 77036 | 020/CBN | 77037 | HCO/CBN | 77036 | 020/CBN | 60 |
| | •SEAT ASSY EXT SEAL | 1 | 71571 | 316/TFE | 71573 | HCO/TFE | 71572 | 020/TFE | 55 |
| W | •SEAL HEAD ASSEMBLY | 1 | 77036 | 020/CBN | 77037 | HCO/CBN | 77036 | 020/CBN | 60 |
| | •SEAT ASSY EXT SEAL | 1 | 71574 | SIC/TFE | 71574 | SIC/TFE | 71574 | SIC/TFE | 55 |
| POSITION 9 OPTIONS - DELETE CORRESPONDING STANDARD PUMP COMPONENT FROM B/M | | | | | | | | | |
| C A | HOUSING FRONT - BRG FLUSH | 1 | 70153-1 | 316SS | 70154-1 | ALLOY C | 70155-1 | ALLOY 20 | 1 |
| C | HOUSING REAR - BRG FLUSH | 1 | 70212 | 316SS | 70234 | ALLOY C | 70233 | ALLOY 20 | 3 |
| C | PLUG 1/8" NPT | •3 | W772565-316 | 316SS | 52301 | ALLOY C | 52300 | ALLOY 20 | 62 |
| B | •PIN BEARING LOCK | 4 | 41802 | ALLOY 20 | 41806 | ALLOY C | 41802 | ALLOY 20 | 14 |
| B | •O-RING HOUSING | 2 | 61104 | SS/PFA | 61104 | SS/PFA | 61104 | SS/PFA | 16 |
| D | •BEARING SLOTTED | 5 | 70419 | CARBON | 70419 | CARBON | 70419 | CARBON | 12 13 |
| E | •WEAR PLATE SLOTTED | 4 | 70526 | CARBON | 70526 | CARBON | 70526 | CARBON | 15 |
| F | MOTOR BOLT | 4 | W770544-188 | 188SS | W770544-188 | 188SS | W770544-188 | 188SS | 25 |
| F | C-FACE MOTOR ADAPTOR 63 FR | 1 | 49743 | ALUMINUM | 49743 | ALUMINUM | 49743 | ALUMINUM | 66 |
| F | COUPLING L-050 63 FR | 1 | W213579-000 | STEEL | W213579-000 | STEEL | W213579-000 | STEEL | 68 |
| G | MOTOR BOLT | 4 | W770545-188 | 188SS | W770545-188 | 188SS | W770545-188 | 188SS | 25 |
| G | C-FACE MOTOR ADAPTOR 71 FR | 1 | 49744 | ALUMINUM | 49744 | ALUMINUM | 49744 | ALUMINUM | 66 |
| G | COUPLING L-070 71 FR | 1 | W213581-000 | STEEL | W213581-000 | STEEL | W213581-000 | STEEL | 68 |
| K | MOTOR BOLT | 4 | W770546-188 | 188SS | W770546-188 | 188SS | W770546-188 | 188SS | 25 |
| K | C-FACE MOTOR ADAPTOR 80 FR | 1 | 49745 | ALUMINUM | 49745 | ALUMINUM | 49745 | ALUMINUM | 66 |
| K | COUPLING L-075 80 FR | 1 | W213583-000 | STEEL | W213583-000 | STEEL | W213583-000 | STEEL | 68 |
| L | COUPLING L-090 143TC-184C FR | 1 | W213229-000 | STEEL | W213229-000 | STEEL | W213229-000 | STEEL | 68 |
| V | HOUSING CENTER - VENT FNPT | 1 | 70026-2 | 316SS | 70027-2 | ALLOY C | 70028-2 | ALLOY 20 | 2 |
| V | HOUSING CENTER - VENT FBSPT | | 70029-2 | 316SS | 70030-2 | ALLOY C | 70031-2 | ALLOY 20 | 2 |
| V | PLUG 1/8" NPT | •1 | W772565-316 | 316SS | 52301 | ALLOY C | 52300 | ALLOY 20 | 62 |

•COMPONENT QUANTITY MAY BE CUMULATIVE OVER ENTIRE B/M
•DENOTES RECOMMENDED SPARE PART

# GA4/GC4 SERIES PUMP
# CONSOLIDATED B/M

| | DESCRIPTION | QTY | STANDARD PUMP MATERIAL: 316SS (A) OR (K) PART NO | MAT. | ALLOY C (C) OR (M) PART NO | MAT. | ALLOY 20 (D) OR (N) PART NO | MAT. | TEM |
|---|---|---|---|---|---|---|---|---|---|
| POSITION 8 SEAL ARRANGEMENT | | | | | | | | | |
| INTERNAL MECHANICAL SEAL | | | | | | | | | |
| GA4 COMMON PARTS | SEAL RETAINER CODE A E P Q L | 1 | 21759 | 316SS | 21760 | ALLOY C | 21761 | ALLOY 20 | 36 |
| | SEAL RETAINER CODE C | | 21762 | 316SS | 21763 | ALLOY C | 21764 | ALLOY 20 | 36 |
| | •O-RING RETAINER | 1 | W213270-TFE | TFE | W213270-TFE | TFE | W213270-TFE | TFE | 37 |
| | BOLT SEAL RETAINER | 2 | W770401-188 | 188SS | W770401-188 | 188SS | W770401-188 | 188SS | 39A |
| | PLUG 1/8" NPT (NOT REQ C E) | •2 | W772565-316 | 316SS | 52301 | ALLOY C | 52300 | ALLOY 20 | 62 |
| GC4 COMMON PARTS | SEAL RETAINER CODE A E P Q U | 1 | 21765 | 316SS | 21766 | ALLOY C | 21767 | ALLOY 20 | 36 |
| | SEAL RETAINER CODE C | | 21768 | 316SS | 21769 | ALLOY C | 21770 | ALLOY 20 | 36 |
| | •O-RING RETAINER | 1 | W213270-TFE | TFE | W213270-TFE | TFE | W213270-TFE | TFE | 37 |
| | BOLT C-FACE ADAPTOR | 4 | W770403-188 | 188SS | W770403-188 | 188SS | W770403-188 | 188SS | 39A |
| | PLUG 1/8" NPT (NOT REQ C E) | •2 | W772565-316 | 316SS | 52301 | ALLOY C | 52300 | ALLOY 20 | 62 |
| | MOTOR BOLT | 4 | W770425-188 | 188SS | W770425-188 | 188SS | W770425-188 | 188SS | 25 |
| | C-FACE MOTOR ADAPTOR | 1 | 49725 | ALUMINUM | 49725 | ALUMINUM | 49725 | ALUMINUM | 66 |
| | COUPLING L-075 56C FR | 1 | W210369-000 | STEEL | W210369-000 | STEEL | W210369-000 | STEEL | 68 |
| | •ASSEMBLY INSTRUCTIONS | 1 | 20051-A | ----- | 20051-A | ----- | 20051-A | ----- | -- |
| A | •SEAL HEAD ASSEMBLY | 1 | Y0900921-316 | 316/CBN/VTN | ----- | ----- | ----- | ----- | 60 |
| | •SEAL SEAT W/ O-RING (VTN) | 1 | Y1000521-000 | CER/VTN | ----- | ----- | ----- | ----- | 55 |
| C | •SEAL HEAD ASSEMBLY | 2 | Y0900921-316 | 316/CBN/VTN | ----- | ----- | ----- | ----- | 60 |
| | •SEAL SEAT W/ O-RING (VTN) | 2 | Y1000521-000 | CER/VTN | ----- | ----- | ----- | ----- | 55 |
| E | •SEAL HEAD ASSEMBLY | 1 | 77051 | 316/CBN | ----- | ----- | ----- | ----- | 60 |
| | •SEAL SEAT W/ O-RING (TFE) | 2 | Y1000609-000 | SIC/TFE | ----- | ----- | ----- | ----- | 55 |
| P | •SEAL HEAD ASSEMBLY | • | Y0901721-316 | 316/PBN/EPR | -- -- | ----- | ----- | --- - | 60 |
| | •SEAL SEAT W/ O-RING (TFE) | 1 | Y1000609-000 | SIC/TFE | ----- | ----- | ----- | ----- | 55 |
| Q | •SEAL HEAD ASSEMBLY | 1 | 77033 | 020/TFE | 77034 | HCO/TFE | 77033 | 020/TFE | 60 |
| | •SEAL SEAT W/ O-RING (TFE) | 1 | Y1000609-000 | SIC/TFE | Y1000609-000 | SIC/TFE | Y1000609-000 | SIC/TFE | 55 |
| U | •SEAL HEAD ASSEMBLY | 1 | 77036 | 020/CBN | 77037 | HCO/CBN | 77036 | 020/CBN | 60 |
| | •SEAL SEAT W/ O-RING (TFE) | 1 | Y1000609-000 | SIC/TFE | Y1000609-000 | SIC/TFE | Y1000609-000 | SIC/TFE | 55 |
| EXTERNAL MECHANICAL SEAL | | | | | | | | | |
| GA4 COMMON PARTS | SEAL RETAINER | 1 | 21783 | 316SS | 21784 | ALLOY C | 21785 | ALLOY 20 | 36 |
| | BOLT SEAL RETAINER | 2 | W770403-188 | 188SS | W770403-188 | 188SS | W770403-188 | 188SS | 39A |
| | PLUG 1/8" NPT | •2 | W772565-316 | 316SS | 52301 | ALLOY C | 52300 | ALLOY 20 | 62 |
| GC4 COMMON PARTS | BOLT, C-FACE ADAPTOR | 4 | W770403-188 | 188SS | W770403-188 | 188SS | W770403-188 | 188SS | 39A |
| | PLUG 1/8" NPT | •2 | W772565-316 | 316SS | 52301 | ALLOY C | 52300 | ALLOY 20 | 62 |
| | MOTOR BOLT | 4 | W770425-188 | 188SS | W770425-188 | 188SS | W770425-188 | 188SS | 25 |
| | C-FACE MOTOR ADAPTOR | 1 | 49725 | ALUMINUM | 49725 | ALUMINUM | 49725 | ALUMINUM | 66 |
| | COUPLING L-075 56C FR | 1 | W210369-000 | STEEL | W210369-000 | STEEL | W210369-000 | STEEL | 68 |
| | ASSEMBLY INSTRUCTIONS | 1 | 20051-A | ----- | 20051-A | ----- | 20051-A | ----- | -- |
| V | •SEAL HEAD ASSEMBLY | 1 | 77036 | 020/CBN | 77037 | HCO/CBN | 77036 | 020/CBN | 60 |
| | •SEAT ASSY,EXT SEAL | 1 | 71571 | 316/TFE | 71573 | HCO/TFE | 71572 | 020/TFE | 55 |
| W | •SEAL HEAD ASSEMBLY | • | 77036 | 020/CBN | 77037 | HCO/CBN | 77036 | 020/CBN | 60 |
| | •SEAT ASSY,EXT SEAL | 1 | 71574 | SIC/TFE | 71574 | SIC/TFE | 71574 | SIC/TFE | 55 |
| POSITION 9 OPTIONS - DELETE CORRESPONDING STANDARD PUMP COMPONENT FROM B/M | | | | | | | | | |
| A | HOUSING FRONT - BRG FLUSH | 1 | 70153-1 | 316SS | 70154-1 | ALLOY C | 70155-1 | ALLOY 20 | 1 |
| C | HOUSING REAR - BRG FLUSH | 1 | 70212 | 316SS | 70234 | ALLOY C | 70233 | ALLOY 20 | 3 |
| | PLUG 1/8" NPT | •3 | W772565-316 | 316SS | 52301 | ALLOY C | 52300 | ALLOY 20 | 62 |
| B | •PIN BEARING LOCK | 4 | 41802 | ALLOY 20 | 41806 | ALLOY C | 41802 | ALLOY 20 | 14 |
| | •O-RING HOUSING | 2 | 61104 | SS/PFA | 61104 | SS/PFA | 61104 | SS/PFA | 16 |
| D | •BEARING SLOTTED | 5 | 70419 | CARBON | 70419 | CARBON | 70419 | CARBON | 12 13 |
| E | •WEAR PLATE SLOTTED | 4 | 70509 | CARBON | 70509 | CARBON | 70509 | CARBON | 15 |
| F | MOTOR BOLT | 4 | W770544-188 | 188SS | W770544-188 | 188SS | W770544-188 | 188SS | 25 |
| | C-FACE MOTOR ADAPTOR 63 FR | 1 | 49743 | ALUMINUM | 49743 | ALUMINUM | 49743 | ALUMINUM | 66 |
| | COUPLING L-050 63 FR | 1 | W213579-000 | STEEL | W213579-000 | STEEL | W213579-000 | STEEL | 68 |
| G | MOTOR BOLT | 4 | W770545-188 | 188SS | W770545-188 | 188SS | W770545-188 | 188SS | 25 |
| | C-FACE MOTOR ADAPTOR 71 FR | 1 | 49744 | ALUMINUM | 49744 | ALUMINUM | 49744 | ALUMINUM | 66 |
| | COUPLING L-070 71 FR | 1 | W213581-000 | STEEL | W213581-000 | STEEL | W213581-000 | STEEL | 68 |
| K | MOTOR BOLT | 4 | W770546-188 | 188SS | W770546-188 | 188SS | W770546-188 | 188SS | 25 |
| | C-FACE MOTOR ADAPTOR 80 FR | 1 | 49745 | ALUMINUM | 49745 | ALUMINUM | 49745 | ALUMINUM | 66 |
| | COUPLING L-075 80 FR | 1 | W213583-000 | STEEL | W213583-000 | STEEL | W213583-000 | STEEL | 68 |
| L | COUPLING L-090 143TC-184C FR | 1 | W213229-000 | STEEL | W213229-000 | STEEL | W213229-000 | STEEL | 68 |
| N | •GEAR, DRIVE/IDLER | 1-2 | 70613 | ALLOY C | 70613 | ALLOY C | 70613 | ALLOY C | 6 7 |
| | •GEAR DRIVE/IDLER | 1-2 | 70633 | ALLOY 20 | ----- | ----- | 70633 | ALLOY 20 | 6,7 |
| | •GEAR IDLER | 1 | 70651 | CARBON | 70651 | CARBON | 70651 | CARBON | 7 |
| | •GEAR, DRIVE/IDLER | 1-2 | 70623 | TFE(GF) | 70623 | TFE(GF) | 70623 | TFE(GF) | 6,7 |
| | •GEAR DRIVE/IDLER | 1-2 | 70677 | PEEK | 70677 | PEEK | 70677 | PEEK | 6,7 |
| | •KEY, METAL DRIVE GEAR | •1 | 71910 | ALLOY 20 | 71911 | ALLOY C | 71910 | ALLOY 20 | 8 |
| | •KEY, PLASTIC DRIVE GEAR | | 71916 | ALLOY 20 | 71917 | ALLOY C | 71916 | ALLOY 20 | 8 |
| | •KEY MTL/CBN IDLER GEAR | •1 | 71910 | ALLOY 20 | 71911 | ALLOY C | 71910 | ALLOY 20 | 9 |
| | •KEY, PLASTIC IDLER GEAR | | 71916 | ALLOY 20 | 71917 | ALLOY C | 71916 | ALLOY 20 | 9 |
| V | HOUSING CENTER - VENT FNPT | 1 | 70014-2 | 316SS | 70016-2 | ALLOY C | 70015-2 | ALLOY 20 | 2 |
| | HOUSING CENTER - VENT FBSPT | | 70020-2 | 316SS | 70022-2 | ALLOY C | 70021-2 | ALLOY 20 | 2 |
| | PLUG 1/8" NPT | •1 | W772565-316 | 316SS | 52301 | ALLOY C | 52300 | ALLOY 20 | 62 |

•COMPONENT QUANTITY MAY BE CUMULATIVE OVER ENTIRE B/M
•DENOTES RECOMMENDED SPARE PART

# GA4/GC4 SERIES PUMP
# CONSOLIDATED B/M

| DESCRIPTION | QTY | STANDARD PUMP MATERIAL: 316SS (A) OR (K) PART NO | MATL | ALLOY C (C) OR (M) PART NO | MATL | ALLOY 20 (D) OR (N) PART NO | MATL | ITEM |
|---|---|---|---|---|---|---|---|---|
| POSITION 3 STANDARD PUMP - NON-VARIABLE COMPONENTS | | | | | | | | |
| HOUSING FRONT | 1 | 70153 | 316SS | 70154 | ALLOY C | 70155 | ALLOY 20 | 1 |
| HOUSING CENTER FNPT | 1 | 70014 | 316SS | 70016 | ALLOY C | 70015 | ALLOY 20 | 2 |
| HOUSING CENTER FBSPT | | 70020 | 316SS | 70022 | ALLOY C | 70021 | ALLOY 20 | 2 |
| HOUSING REAR | 1 | 70214 | 316SS | 70215 | ALLOY C | 70216 | ALLOY 20 | 3 |
| •RING RETAINING | 4 | 76702 | ALLOY 20 | 76701 | ALLOY C | 76702 | ALLOY 20 | 10 11 |
| •RING RETAINING POS 8 OPT A P | 5 | | | | | | | |
| •KEY METAL DRIVE GEAR | *1 | 71906 | ALLOY 20 | 71904 | ALLOY C | 71906 | ALLOY 20 | 8 |
| •KEY PLASTIC DRIVE GEAR | | 71905 | ALLOY 20 | 71903 | ALLOY C | 71905 | ALLOY 20 | 8 |
| •KEY MTL/CBN IDLER GEAR | *1 | 71906 | ALLOY 20 | 71904 | ALLOY C | 71906 | ALLOY 20 | 9 |
| •KEY PLASTIC IDLER GEAR | | 71905 | ALLOY 20 | 71903 | ALLOY C | 71905 | ALLOY 20 | 9 |
| •PIN BEARING LOCK | 4 | 41801 | TFE | 41801 | TFE | 41801 | TFE | 14 |
| •O-RING HOUSING | 2 | 61101 | TFE | 61101 | TFE | 61101 | TFE | 16 |
| PIN HOUSING | 4 | 40801 | 316SS | 40801 | 316SS | 40801 | 316SS | 17 |
| BOLT HOUSING | 4 | 72006 | 188SS | 72006 | 188SS | 72006 | 188SS | 18A |
| NUT HOUSING BOLT | 4 | 72101 | 188SS | 72101 | 188SS | 72101 | 188SS | 19 |
| NAMEPLATE | 1 | 41201 | 188SS | 41201 | 188SS | 41201 | 188SS | -- |
| POSITION 4 & 5 DRIVE AND IDLER GEAR | | | | | | | | |
| C •GEAR DRIVE/IDLER | 1-2 | 70638 | ALLOY C | 70638 | ALLOY C | 70638 | ALLOY C | 6 7 |
| D •GEAR DRIVE/IDLER | 1-2 | 70642 | ALLOY 20 | ----- | ----- | 70642 | ALLOY 20 | 6 7 |
| K •GEAR IDLER | 1 | 70611 | CARBON | 70611 | CARBON | 70611 | CARBON | 7 |
| T •GEAR DRIVE/IDLER | 1-2 | 70600 | TFE(GF) | 70600 | TFE(GF) | 70600 | TFE(GF) | 6 7 |
| E •GEAR DRIVE/IDLER | 1-2 | 70671 | PEEK | 70671 | PEEK | 70671 | PEEK | 6 7 |
| POSITION 6 WEAR PLATE MATERIAL - **QTY 8 WHEN USING NARROW WIDTH GEARS | | | | | | | | |
| K •WEAR PLATE | 4 | 70501 | CARBON | 70501 | CARBON | 70501 | CARBON | 15 |
| •WEAR PLATE NARROW WIDTH GEARS | 4 | 70536 | CARBON | 70536 | CARBON | 70536 | CARBON | 15 |
| T •WEAR PLATE | **4 | 70504 | TFE(GF) | 70504 | TFE(GF) | 70504 | TFE(GF) | 15 |
| Z •WEAR PLATE | **4 | 70503 | CERAMIC | 70503 | CERAMIC | 70503 | CERAMIC | 15 |
| E •WEAR PLATE | **4 | 70535 | PEEK | 70535 | PEEK | 70535 | PEEK | 15 |
| POSITION 7 SHAFT AND BEARING MATERIAL | | | | | | | | |
| STANDARD CONSTRUCTION | | | | | | | | |
| K •BEARING | 5 | 70404 | CARBON | 70404 | CARBON | 70404 | CARBON | 12 13 |
| •SHAFT DRIVE STD | 1 | 70372 | 316SS | 70373 | ALLOY C | 70374 | ALLOY 20 | 4 |
| •SHAFT DRIVE POS 8 OPT A P | | 70372-5 | 316SS | 70373-5 | ALLOY C | 70374-5 | ALLOY 20 | 4 |
| •SHAFT IDLER | 1 | 70378 | 316SS | 70379 | ALLOY C | 70380 | ALLOY 20 | 5 |
| T •BEARING | 1 | 70401 | TFE(GF) | 70401 | TFE(GF) | 70401 | TFE(GF) | 12 |
| •BEARING | 3 | 70402 | TFE(GF) | 70402 | TFE(GF) | 70402 | TFE(GF) | 12 13 |
| •SHAFT DRIVE STD | 1 | 70372 | 316SS | 70373 | ALLOY C | 70374 | ALLOY 20 | 4 |
| •SHAFT DRIVE POS 8 OPT A P | | 70372-5 | 316SS | 70373-5 | ALLOY C | 70374-5 | ALLOY 20 | 4 |
| •SHAFT IDLER | 1 | 70378 | 316SS | 70379 | ALLOY C | 70380 | ALLOY 20 | 5 |
| EXTENDED LIFE - BEARINGS | | | | | | | | |
| L •BEARING | 5 | 70431 | EWCBN | 70431 | EWCBN | 70431 | EWCBNN | 12,13 |
| •SHAFT DRIVE STD | 1 | 70372 | 316SS | 70373 | ALLOY C | 70374 | ALLOY 20 | 4 |
| •SHAFT DRIVE POS 8 OPT A P | | 70372-5 | 316SS | 70373-5 | ALLOY C | 70374-5 | ALLOY 20 | 4 |
| •SHAFT IDLER | 1 | 70378 | 316SS | 70379 | ALLOY C | 70380 | ALLOY 20 | 5 |
| EXTENDED LIFE - BEARINGS AND 'CW' SHAFTS | | | | | | | | |
| C •BEARING | 5 | 70431 | EWCBN | 70431 | EWCBN | 70431 | EWCBN | 12 13 |
| •SHAFT DRIVE STD | 1 | 70372-2 | CW316 | 70373-2 | CWALYC | 70374-2 | CWALY20 | 4 |
| •SHAFT DRIVE POS 8 OPT A P | | 70372-6 | CW316 | 70373-6 | CWALYC | 70374-6 | CWALY20 | 4 |
| •SHAFT IDLER | 1 | 70394 | CW316 | 70397 | CWALYC | 70306 | CWALY20 | 5 |

*COMPONENT QUANTITY MAY BE CUMULATIVE OVER ENTIRE B/M
•DENOTES RECOMMENDED SPARE PART

# GA6/GC6 SERIES PUMP
# CONSOLIDATED B/M

| | DESCRIPTION | QTY | STANDARD PUMP MATERIAL: 316SS (A) OR (K) PART NO | MATL | ALLOY C (C) OR (M) PART NO | MATL | ALLOY 20 (D) OR (N) PART NO | MATL | ITEM |
|---|---|---|---|---|---|---|---|---|---|
| POSITION 8 SEAL ARRANGEMENT | | | | | | | | | |
| INTERNAL MECHANICAL SEAL | | | | | | | | | |
| GA6 COMMON PARTS | SEAL RETAINER CODE A E P,Q,U | 1 | 21771 | 316SS | 21772 | ALLOY C | 21773 | ALLOY 20 | 36 |
| | SEAL RETAINER CODE C | | 21774 | 316SS | 21775 | ALLOY C | 21776 | ALLOY 20 | 36 |
| | •O-RING RETAINER | 1 | W213270-TFE | TFE | W213270-TFE | TFE | W213270-TFE | TFE | 37 |
| | BOLT, SEAL RETAINER | 2 | W770401-188 | 188SS | W770401-188 | 188SS | W770401-188 | 188SS | 39A |
| | PLUG 1/8" NPT (NOT REQ C,E) | •2 | W772565-316 | 316SS | 52301 | ALLOY C | 52300 | ALLOY 20 | 62 |
| GC6 COMMON PARTS | SEAL RETAINER CODE A E P Q U | 1 | 21777 | 316SS | 21778 | ALLOY C | 21779 | ALLOY 20 | 36 |
| | SEAL RETAINER CODE C | | 21780 | 316SS | 21781 | ALLOY C | 21782 | ALLOY 20 | 36 |
| | •O-RING RETAINER | 1 | W213270-TFE | TFE | W213270-TFE | TFE | W213270-TFE | TFE | 37 |
| | BOLT C-FACE ADAPTOR | 4 | W770403-188 | 188SS | W770403-188 | 188SS | W770403-188 | 188SS | 39A |
| | PLUG 1/8" NPT (NOT REQ C,E) | •2 | W772565-316 | 316SS | 52301 | ALLOY C | 52300 | ALLOY 20 | 62 |
| | MOTOR BOLT | 4 | W770425-188 | 188SS | W770425-188 | 188SS | W770425-188 | 188SS | 25 |
| | C-FACE MOTOR ADAPTOR | 1 | 49725 | ALUMINUM | 49725 | ALUMINUM | 49725 | ALUMINUM | 66 |
| | COUPLING L-075 56C FR | 1 | W213232-000 | STEEL | W213232-000 | STEEL | W213232-000 | STEEL | 68 |
| | •ASSEMBLY INSTRUCTIONS | 1 | 20051-A | ----- | 20051-A | ----- | 20051-A | ----- | -- |
| A | •SEAL HEAD ASSEMBLY | 1 | Y0900121-316 | 316/CBN/VTN | ----- | ----- | ----- | ----- | 60 |
| | •SEAL SEAT W/ O-RING (VTN) | 1 | Y1000121-000 | CER/VTN | ----- | ----- | ----- | ----- | 55 |
| C | •SEAL HEAD ASSEMBLY | 2 | Y0900121-316 | 316/CBN/VTN | ----- | ----- | ----- | ----- | 60 |
| | •SEAL SEAT W/ O-RING (VTN) | 2 | Y1000121-000 | CER/VTN | ----- | ----- | ----- | ----- | 55 |
| E | •SEAL HEAD ASSEMBLY | 1 | 27092 | 316/CBN | ----- | ----- | ----- | ----- | 60 |
| | •SEAL SEAT W/ O-RING (TFE) | 2 | Y1000209-000 | SIC/TFE | ----- | ----- | ----- | ----- | 55 |
| P | •SEAL HEAD ASSEMBLY | 1 | Y0901621-316 | 316/P90/EPR | ----- | ----- | ----- | ----- | 60 |
| | •SEAL SEAT W/ O-RING (TFE) | 1 | Y1000209-000 | SIC/TFE | --- | --- | --- | ----- | 55 |
| Q | •SEAL HEAD ASSEMBLY | 1 | 27097 | 020/TFE | 27099 | HC0/TFE | 27097 | 020/TFE | 60 |
| | •SEAL SEAT W/ O-RING (TFE) | 1 | Y1000209-000 | SIC/TFE | Y1000209-000 | SIC/TFE | Y1000209-000 | SIC/TFE | 55 |
| U | •SEAL HEAD ASSEMBLY | 1 | 27089 | 020/CBN | 27090 | HC0/CBN | 27089 | 020/CBN | 60 |
| | •SEAL SEAT W/ O-RING (TFE) | 1 | Y1000209-000 | SIC/TFE | Y1000209-000 | SIC/TFE | Y1000209-000 | SIC/TFE | 55 |
| EXTERNAL MECHANICAL SEAL | | | | | | | | | |
| GA6 COMMON PARTS | SEAL RETAINER | 1 | 21783 | 316SS | 21784 | ALLOY C | 21785 | ALLOY 20 | 36 |
| | BOLT SEAL RETAINER | 2 | W770403-188 | 188SS | W770403-188 | 188SS | W770403-188 | 188SS | 39A |
| | PLUG 1/8" NPT | •2 | W772565-316 | 316SS | 52301 | ALLOY C | 52300 | ALLOY 20 | 62 |
| GC6 COMMON PARTS | BOLT C-FACE ADAPTOR | 4 | W770403-188 | 188SS | W770403-188 | 188SS | W770403-188 | 188SS | 39A |
| | PLUG 1/8" NPT | •2 | W772565-316 | 316SS | 52301 | ALLOY C | 52300 | ALLOY 20 | 62 |
| | MOTOR BOLT | 4 | W770425-188 | 188SS | W770425-188 | 188SS | W770425-188 | 188SS | 25 |
| | C-FACE MOTOR ADAPTOR | 1 | 49725 | ALUMINUM | 49725 | ALUMINUM | 49725 | ALUMINUM | 66 |
| | COUPLING L-075 56C FR | 1 | W213232-000 | STEEL | W213232-000 | STEEL | W213232-000 | STEEL | 68 |
| | ASSEMBLY INSTRUCTIONS | 1 | 20051-A | ----- | 20051-A | ----- | 20051-A | ----- | -- |
| V | •SEAL HEAD ASSEMBLY | 1 | 27089 | 020/CBN | 27090 | HC0/CBN | 27089 | 020/CBN | 60 |
| | •SEAT ASSY EXT SEAL | 1 | 21580 | 316/TFE | 21582 | HC0/TFE | 21581 | 020/TFE | 55 |
| W | •SEAL HEAD ASSEMBLY | 1 | 27089 | 020/CBN | 27090 | HC0/CBN | 27089 | 020/CBN | 60 |
| | •SEAT ASSY EXT SEAL | 1 | 21583 | SIC/TFE | 21583 | SIC/TFE | 21583 | SIC/TFE | 55 |
| POSITION 9 OPTIONS - DELETE CORRESPONDING STANDARD PUMP COMPONENT FROM B/M | | | | | | | | | |
| C A | HOUSING FRONT - BRG FLUSH | 1 | 40156-1 | 316SS | 40157-1 | ALLOY C | 40158-1 | ALLOY 20 | 1 |
| | HOUSING REAR - BRG FLUSH | 1 | 40224 | 316SS | 40231 | ALLOY C | 40234 | ALLOY 20 | 3 |
| | PLUG 1/8" NPT | •3 | W772565-316 | 316SS | 52301 | ALLOY C | 52300 | ALLOY 20 | 62 |
| C B | •PIN BEARING LOCK | 4 | •1802 | ALLOY 20 | 41806 | ALLOY C | 41802 | ALLOY 20 | 14 |
| | •O-RING HOUSING | 2 | 41107 | SS/PFA | 41107 | SS/PFA | 41107 | SS/PFA | 16 |
| D | •BEARING SLOTTED | 4 | 40428 | CARBON | 40428 | CARBON | 40428 | CARBON | 12,13 |
| | •BEARING SLOTTED | | 40417 | TFE(GF) | 40417 | TFE(GF) | 40417 | TFE(GF) | 12,13 |
| E | •WEAR PLATE SLOTTED | 4 | 40511 | CARBON | 40511 | CARBON | 40511 | CARBON | 15 |
| | •WEAR PLATE SLOTTED | | 40513 | TFE(GF) | 40513 | TFE(GF) | 40513 | TFE(GF) | 15 |
| G | MOTOR BOLT | 4 | W770545-188 | 188SS | W770545-188 | 188SS | W770545-188 | 188SS | 25 |
| | C-FACE MOTOR ADAPTOR 71 FR | 1 | 49744 | ALUMINUM | 49744 | ALUMINUM | 49744 | ALUMINUM | 66 |
| | COUPLING L-070 71 FR | 1 | W213582-000 | STEEL | W213582-000 | STEEL | W213582-000 | STEEL | 68 |
| K | MOTOR BOLT | 4 | W770546-188 | 188SS | W770546-188 | 188SS | W770546-188 | 188SS | 25 |
| | C-FACE MOTOR ADAPTOR 80 FR | 1 | 49745 | ALUMINUM | 49745 | ALUMINUM | 49745 | ALUMINUM | 66 |
| | COUPLING L-075 80 FR | 1 | W213584-000 | STEEL | W213584-000 | STEEL | W213584-000 | STEEL | 68 |
| L | CPLG EXT SEAL L-090 143TC-184C FR | 1 | W213230-000 | STEEL | W213230-000 | STEEL | W213230-000 | STEEL | 68 |
| | COUPLING L-095 143TC-184C FR | | W213231-000 | STEEL | W213231-000 | STEEL | W213231-000 | STEEL | 68 |
| M | MOTOR BOLT | 4 | W770547-188 | 188SS | W770547-188 | 188SS | W770547-188 | 188SS | 25 |
| | C-FACE MOTOR ADAPTOR 90 FR | 1 | 49746 | ALUMINUM | 49746 | ALUMINUM | 49746 | ALUMINUM | 66 |
| | COUPLING L-090 90 FR | 1 | W213586-000 | STEEL | W213586-000 | STEEL | W213586-000 | STEEL | 68 |
| N | •GEAR DRIVE/IDLER | 1-2 | 40604 | ALLOY C | 40604 | ALLOY C | 40604 | ALLOY C | 6,7 |
| | •GEAR IDLER | 1 | 40681 | CARBON | 40681 | CARBON | 40681 | CARBON | 7 |
| | •GEAR DRIVE/IDLER | 1-2 | 40648 | TFE(GF) | 40648 | TFE(GF) | 40648 | TFE(GF) | 6 7 |
| | •GEAR DRIVE/IDLER | 1-2 | 40717 | PEEK | 40717 | PEEK | 40717 | PEEK | 6 7 |
| | •KEY METAL DRIVE GEAR | •1 | 41920 | ALLOY 20 | 41913 | ALLOY C | 41920 | ALLOY 20 | 8 |
| | •KEY PLASTIC DRIVE GEAR | | 41921 | ALLOY 20 | 41914 | ALLOY C | 41921 | ALLOY 20 | 8 |
| | •KEY MTL/CBN IDLER GEAR | •1 | 41920 | ALLOY 20 | 41913 | ALLOY C | 41920 | ALLOY 20 | 9 |
| | •KEY PLASTIC IDLER GEAR | | 41921 | ALLOY 20 | 41914 | ALLOY C | 41921 | ALLOY 20 | 9 |
| V | HOUSING CENTER - VENT FNPT | 1 | 40002-2 | 316SS | 40006-2 | ALLOY C | 40008-2 | ALLOY 20 | 2 |
| | HOUSING, CENTER - VENT FBSPT | | 40011-2 | 316SS | 40023-2 | ALLOY C | 40017-2 | ALLOY 20 | 2 |
| | PLUG 1/8" NPT | •1 | W772565-316 | 316SS | 52301 | ALLOY C | 52300 | ALLOY 20 | 62 |

•COMPONENT QUANTITY MAY BE CUMULATIVE OVER ENTIRE B/M
•DENOTES RECOMMENDED SPARE PART

# GA6/GC6 SERIES PUMP
# CONSOLIDATED B/M

| DESCRIPTION | QTY | STANDARD PUMP MATERIAL: 316SS (A) OR (K) PART NO | MATL | ALLOY C (C) OR (M) PART NO | MATL | ALLOY 20 (D) OR (N) PART NO | MATL | ITEM |
|---|---|---|---|---|---|---|---|---|
| POSITION 3 STANDARD PUMP - NON-VARIABLE COMPONENTS | | | | | | | | |
| HOUSING FRONT | 1 | 40156 | 316SS | 40157 | ALLOY C | 40158 | ALLOY 20 | 1 |
| HOUSING CENTER FNPT | 1 | 40002 | 316SS | 40006 | ALLOY C | 40008 | ALLOY 20 | 2 |
| HOUSING CENTER FBSPT | 1 | 40011 | 316SS | 40023 | ALLOY C | 40017 | ALLOY 20 | 2 |
| HOUSING REAR | 1 | 40218 | 316SS | 40219 | ALLOY C | 40220 | ALLOY 20 | 3 |
| •RING RETAINING | 4 | 46702 | ALLOY 20 | 46701 | ALLOY C | 46702 | ALLOY 20 | 10 11 |
| •RING RETAINING POS 8 OPT A P | 5 | | | | | | | |
| •KEY METAL DRIVE GEAR | •1 | 41905 | ALLOY 20 | 41903 | ALLOY C | 41905 | ALLOY 20 | 8 |
| •KEY PLASTIC DRIVE GEAR | | 41906 | ALLOY 20 | 41904 | ALLOY C | 41906 | ALLOY 20 | 8 |
| •KEY METAL/CBN IDLER GEAR | •1 | 41905 | ALLOY 20 | 41903 | ALLOY C | 41905 | ALLOY 20 | 9 |
| •KEY PLASTIC IDLER GEAR | | 41906 | ALLOY 20 | 41904 | ALLOY C | 41906 | ALLOY 20 | 9 |
| •PIN BEARING LOCK | 4 | 41801 | TFE | 41801 | TFE | 41801 | TFE | 14 |
| •O-RING HOUSING | 2 | 41101 | TFE | 41101 | TFE | 41101 | TFE | 16 |
| PIN HOUSING | 4 | 40801 | 316SS | 40801 | 316SS | 40801 | 316SS | 17 |
| BOLT HOUSING | 4 | 62005 | 188SS | 62005 | 188SS | 62005 | 188SS | 18A |
| NUT HOUSING BOLT | 4 | 62101 | 188SS | 62101 | 188SS | 62101 | 188SS | 19 |
| NAMEPLATE | 1 | 41201 | 188SS | 41201 | 188SS | 41201 | 188SS | -- |
| POSITION 4 & 5 DRIVE AND IDLER GEAR | | | | | | | | |
| C •GEAR DRIVE/IDLER | 1-2 | 40668 | ALLOY C | 40660 | ALLOY C | 40668 | ALLOY C | 6 7 |
| D •GEAR DRIVE/IDLER | 1-2 | 40674 | ALLOY 20 | ----- | ----- | 40674 | ALLOY 20 | 6 7 |
| K •GEAR IDLER | 1 | 40622 | CARBON | 40622 | CARBON | 40622 | CARBON | 7 |
| T •GEAR DRIVE/IDLER | 1-2 | 40600 | TFE(GF) | 40600 | TFE(GF) | 40600 | TFE(GF) | 6 7 |
| E •GEAR DRIVE/IDLER | 1-2 | 40715 | PEEK | 40715 | PEEK | 40715 | PEEK | 6 7 |
| POSITION 6 WEAR PLATE MATERIAL - **QTY 8 WHEN USING NARROW WIDTH GEARS | | | | | | | | |
| K •WEAR PLATE | **4 | 40501 | CARBON | 40501 | CARBON | 40501 | CARBON | 15 |
| T •WEAR PLATE | | 40504 | TFE(GF) | 40504 | TFE(GF) | 40504 | TFE(GF) | 15 |
| Z •WEAR PLATE | | 40503 | CERAMIC | 40503 | CERAMIC | 40503 | CERAMIC | 15 |
| E •WEAR PLATE | | 40523 | PEEK | 40523 | PEEK | 40523 | PEEK | 15 |
| POSITION 7 SHAFT AND BEARING MATERIAL | | | | | | | | |
| STANDARD CONSTRUCTION | | | | | | | | |
| K •BEARING | 4 | 40426 | CARBON | 40426 | CARBON | 40426 | CARBON | 12 13 |
| •SHAFT DRIVE STD | 1 | 40359 | 316SS | 40361 | ALLOY C | 40373 | ALLOY 20 | 4 |
| •SHAFT DRIVE POS 8 OPT A P | 1 | 40359-5 | 316SS | 40361-5 | ALLOY C | 40373-5 | ALLOY 20 | 4 |
| •SHAFT IDLER | 1 | 40360 | 316SS | 40362 | ALLOY C | 40374 | ALLOY 20 | 5 |
| T •BEARING | 4 | 40425 | TFE(GF) | 40425 | TFE(GF) | 40425 | TFE(GF) | 12 13 |
| •SHAFT DRIVE STD | 1 | 40359 | 316SS | 40361 | ALLOY C | 40373 | ALLOY 20 | 4 |
| •SHAFT DRIVE POS 8 OPT A P | 1 | 40359-5 | 316SS | 40361-5 | ALLOY C | 40373-5 | ALLOY 20 | 4 |
| •SHAFT IDLER | 1 | 40360 | 316SS | 40362 | ALLOY C | 40374 | ALLOY 20 | 5 |
| EXTENDED LIFE - BEARINGS | | | | | | | | |
| L •BEARING | 4 | 40430 | EWCBN | 40430 | EWCBN | 40430 | EWCBN | 12 13 |
| •SHAFT DRIVE STD | 1 | 40359 | 316SS | 40361 | ALLOY C | 40373 | ALLOY 20 | 4 |
| •SHAFT DRIVE POS 8 OPT A P | 1 | 40359-5 | 316SS | 40361-5 | ALLOY C | 40373-5 | ALLOY 20 | 4 |
| •SHAFT IDLER | 1 | 40360 | 316SS | 40362 | ALLOY C | 40374 | ALLOY 20 | 5 |
| EXTENDED LIFE - BEARINGS AND 'CW' SHAFTS | | | | | | | | |
| C •BEARING | 4 | 40430 | EWCBN | 40430 | EWCBN | 40430 | EWCBN | 12 13 |
| •SHAFT DRIVE STD | 1 | 40312 | CW316 | 40361-2 | CWALYC | 40373-2 | CWALY20 | 4 |
| •SHAFT DRIVE POS 8 OPT A P | 1 | 40359-6 | CW316 | 40361-6 | CWALYC | 40373-6 | CWALY20 | 4 |
| •SHAFT IDLER | 1 | 40323 | CW316 | 40302 | CWALYC | 40319 | CWALY20 | 5 |

*COMPONENT QUANTITY MAY BE CUMULATIVE OVER ENTIRE B/M
•DENOTES RECOMMENDED SPARE PART

# GA8/GC8 SERIES PUMP
# CONSOLIDATED B/M

| DESCRIPTION | QTY | STANDARD PUMP MATERIAL: 316SS (A) OR (K) PART NO | MATL | ALLOY C (C) OR (M) PART NO | MATL | ALLOY 20 (D) OR (N) PART NO | MATL | ITEM |
|---|---|---|---|---|---|---|---|---|
| POSITION 3 STANDARD PUMP - NON-VARIABLE COMPONENTS | | | | | | | | |
| HOUSING FRONT | 1 | 40156 | 316SS | 40157 | ALLOY C | 40158 | ALLOY 20 | 1 |
| HOUSING CENTER FNPT | 1 | 40052 | 316SS | 40053 | ALLOY C | 40054 | ALLOY 20 | 2 |
| HOUSING CENTER FBSPT | 1 | 40064 | 316SS | 40065 | ALLOY C | 40066 | ALLOY 20 | 2 |
| HOUSING REAR | 1 | 40218 | 316SS | 40219 | ALLOY C | 40220 | ALLOY 20 | 3 |
| •RING RETAINING STD | 4 | 46702 | ALLOY 20 | 46701 | ALLOY C | 46702 | ALLOY 20 | 10 11 |
| •RING RETAINING POS 8 OPT A P | 5 | | | | | | | |
| •KEY METAL DRIVE GEAR | •2 | 41905 | ALLOY 20 | 41903 | ALLOY C | 41905 | ALLOY 20 | 8 |
| •KEY PLASTIC DRIVE GEAR | | 41906 | ALLOY 20 | 41904 | ALLOY C | 41906 | ALLOY 20 | 8 |
| •KEY MTL/CBN IDLER GEAR | •2 | 41905 | ALLOY 20 | 41903 | ALLOY C | 41905 | ALLOY 20 | 9 |
| •KEY PLASTIC IDLER GEAR | | 41906 | ALLOY 20 | 41904 | ALLOY C | 41906 | ALLOY 20 | 9 |
| •PIN BEARING LOCK | 4 | 41801 | TFE | 41801 | TFE | 41801 | TFE | 14 |
| •O-RING HOUSING | 2 | 41101 | TFE | 41101 | TFE | 41101 | TFE | 16 |
| PIN HOUSING | 4 | 40801 | 316SS | 40801 | 316SS | 40801 | 316SS | 17 |
| BOLT HOUSING | 4 | 62006 | 188SS | 62006 | 188SS | 62006 | 188SS | 18A |
| NUT HOUSING BOLT | 4 | 62101 | 188SS | 62101 | 188SS | 62101 | 188SS | 19 |
| NAMEPLATE | 1 | 41201 | 188SS | 41201 | 188SS | 41201 | 188SS | -- |
| POSITION 4 & 5 DRIVE AND IDLER GEAR | | | | | | | | |
| C •GEAR, DRIVE/IDLER | 1-2 | 40689 | ALLOY C | 40689 | ALLOY C | 40689 | ALLOY C | 6 7 |
| D •GEAR DRIVE/IDLER | 1-2 | 40691 | ALLOY 20 | ----- | ----- | 40691 | ALLOY 20 | 6 7 |
| K •GEAR IDLER | 1 | 40623 | CARBON | 40623 | CARBON | 40623 | CARBON | 7 |
| T •GEAR DRIVE/IDLER | 1-2 | 40701 | TFE(GF) | 40701 | TFE(GF) | 40701 | TFE(GF) | 6 7 |
| E •GEAR DRIVE/IDLER | 1-2 | 40716 | PEEK | 40716 | PEEK | 40716 | PEEK | 6 7 |
| POSITION 6 WEAR PLATE MATERIAL | | | | | | | | |
| K •WEAR PLATE | 4 | 40501 | CARBON | 40501 | CARBON | 40501 | CARBON | 15 |
| T •WEAR PLATE | 4 | 40504 | TFE(GF) | 40504 | TFE(GF) | 40504 | TFE(GF) | 15 |
| Z •WEAR PLATE | 4 | 40503 | CERAMIC | 40503 | CERAMIC | 40503 | CERAMIC | 15 |
| E •WEAR PLATE | 4 | 40523 | PEEK | 40523 | PEEK | 40523 | PEEK | 15 |
| POSITION 7 SHAFT AND BEARING MATERIAL | | | | | | | | |
| STANDARD CONSTRUCTION | | | | | | | | |
| K •BEARING | 4 | 40426 | CARBON | 40426 | CARBON | 40426 | CARBON | 12 13 |
| K •SHAFT DRIVE STD GA8 | 1 | 40351 | ALLOY 20 | 40347 | ALLOY C | 40351 | ALLOY 20 | 4 |
| K •SHAFT DRIVE STD GC8 | 1 | 40351-7 | ALLOY 20 | 40347-7 | ALLOY C | 40351-7 | ALLOY 20 | 4 |
| K •SHAFT DRIVE POS 8 OPT A P GA8 | 1 | 40351-5 | ALLOY 20 | 40347-5 | ALLOY C | 40351-5 | ALLOY 20 | 4 |
| K •SHAFT DRIVE POS 8 OPT A P GC8 | 1 | 40351-9 | ALLOY 20 | 40347-9 | ALLOY C | 40351-9 | ALLOY 20 | 4 |
| K •SHAFT IDLER | 1 | 40350 | ALLOY 20 | 40346 | ALLOY C | 40350 | ALLOY 20 | 5 |
| T •BEARING | 4 | 40425 | TFE(GF) | 40425 | TFE(GF) | 40425 | TFE(GF) | 12 13 |
| T •SHAFT DRIVE STD GA8 | 1 | 40351 | ALLOY 20 | 40347 | ALLOY C | 40351 | ALLOY 20 | 4 |
| T •SHAFT DRIVE STD GC8 | 1 | 40351-7 | ALLOY 20 | 40347-7 | ALLOY C | 40351-7 | ALLOY 20 | 4 |
| T •SHAFT DRIVE POS 8 OPT A P GA8 | 1 | 40351-5 | ALLOY 20 | 40347-5 | ALLOY C | 40351-5 | ALLOY 20 | 4 |
| T •SHAFT DRIVE POS 8 OPT A P GC8 | 1 | 40351-9 | ALLOY 20 | 40347-9 | ALLOY C | 40351-9 | ALLOY 20 | 4 |
| T •SHAFT IDLER | 1 | 40350 | ALLOY 20 | 40346 | ALLOY C | 40350 | ALLOY 20 | 5 |
| EXTENDED LIFE - BEARINGS | | | | | | | | |
| L •BEARING | 4 | 40430 | EWCBN | 40430 | EWCBN | 40430 | EWCBN | 12 13 |
| L •SHAFT DRIVE STD GA8 | 1 | 40351 | ALLOY 20 | 40347 | ALLOY C | 40351 | ALLOY 20 | 4 |
| L •SHAFT DRIVE STD GC8 | 1 | 40351-7 | ALLOY 20 | 40347-7 | ALLOY C | 40351-7 | ALLOY 20 | 4 |
| L •SHAFT DRIVE POS 8 OPT A P GA8 | 1 | 40351-5 | ALLOY 20 | 40347-5 | ALLOY C | 40351-5 | ALLOY 20 | 4 |
| L •SHAFT DRIVE POS 8 OPT A P GC8 | 1 | 40351-9 | ALLOY 20 | 40347-9 | ALLOY C | 40351-9 | ALLOY 20 | 4 |
| L •SHAFT IDLER | 1 | 40350 | ALLOY 20 | 40346 | ALLOY C | 40350 | ALLOY 20 | 5 |
| EXTENDED LIFE - BEARINGS AND 'CW' SHAFTS | | | | | | | | |
| C •BEARING | 4 | 40430 | EWCBN | 40430 | EWCBN | 40430 | EWCBN | 12 13 |
| C •SHAFT DRIVE STD GA8 | 1 | 40351-2 | CWALY20 | 40347-2 | EWALYC | 40351-2 | CWALY20 | 4 |
| C •SHAFT DRIVE STD GC8 | 1 | 40351-8 | CWALY20 | 40347-8 | EWALYC | 40351-8 | CWALY20 | 4 |
| C •SHAFT DRIVE POS 8 OPT A P GA8 | 1 | 40351-6 | CWALY20 | 40347-6 | CWALYC | 40351-6 | CWALY20 | 4 |
| C •SHAFT DRIVE POS 8 OPT A P GC8 | 1 | 40351-10 | CWALY20 | 40347-10 | CWALYC | 40351-10 | CWALY20 | 4 |
| C •SHAFT IDLER | 1 | 40333 | CWALY20 | 40308 | CWALYC | 40333 | CWALY20 | 5 |

•COMPONENT QUANTITY MAY BE CUMULATIVE OVER ENTIRE B/M
•DENOTES RECOMMENDED SPARE PART

# GA8/GC8 SERIES PUMP
# CONSOLIDATED B/M

| | DESCRIPTION | QTY | STANDARD PUMP MATERIAL: 316SS (A) OR (K) PART NO | 316SS (A) OR (K) MATL | ALLOY C (C) OR (M) PART NO | ALLOY C (C) OR (M) MATL | ALLOY 20 (D) OR (N) PART NO | ALLOY 20 (D) OR (N) MATL | ITEM |
|---|---|---|---|---|---|---|---|---|---|
| POSITION 8 SEAL ARRANGEMENT | | | | | | | | | |
| INTERNAL MECHANICAL SEAL | | | | | | | | | |
| GA8 COMMON PARTS | SEAL RETAINER CODE A,E P Q U | 1 | 21771 | 316SS | 21772 | 316SS | 21773 | 316SS | 36 |
| | SEAL RETAINER CODE C | | 21774 | 316SS | 21775 | 316SS | 21776 | 316SS | 36 |
| | •O-RING RETAINER | 1 | W213270-TFE | TFE | W213270-TFE | TFE | W213270-TFE | TFE | 37 |
| | BOLT SEAL RETAINER | 2 | W770401-188 | 188SS | W770401-188 | 188SS | W770401-188 | 188SS | 39A |
| | PLUG 1/8" NPT (NOT REQ C,E) | •2 | W772565-316 | 316SS | 52301 | ALLOY C | 52300 | ALLOY 20 | 62 |
| GC8 COMMON PARTS | SEAL RETAINER CODE A E,P,Q U | 1 | 21777 | 316SS | 21778 | 316SS | 21779 | 316SS | 36 |
| | SEAL RETAINER CODE C | | 21780 | 316SS | 21781 | 316SS | 21782 | 316SS | 36 |
| | •O-RING RETAINER | 1 | W213270-TFE | TFE | W213270-TFE | TFE | W213270-TFE | TFE | 37 |
| | BOLT C-FACE ADAPTOR | 4 | W770403-188 | 188SS | W770403-188 | 188SS | W770403-188 | 188SS | 39A |
| | PLUG 1/8" NPT (NOT REQ C E) | •2 | W772565-316 | 316SS | 52301 | ALLOY C | 52300 | ALLOY 20 | 62 |
| | MOTOR BOLT | 4 | W770425-188 | 188SS | W770425-188 | 188SS | W770425-188 | 188SS | 25 |
| | C-FACE MOTOR ADAPTOR | 1 | 49725 | ALUMINUM | 49725 | ALUMINUM | 49725 | ALUMINUM | 66 |
| | COUPLING L-075 56C FR | 1 | W213232-000 | STEEL | W213232-000 | STEEL | W213232-000 | STEEL | 68 |
| | •ASSEMBLY INSTRUCTIONS | 1 | 20051-A | ----- | 20051-A | ----- | 20051-A | ----- | -- |
| A | •SEAL HEAD ASSEMBLY | 1 | Y0900121-316 | 316/CBN/VTN | ----- | ----- | ----- | ----- | 60 |
| | •SEAL SEAT W/ O-RING (TFE) | 1 | Y1000121-000 | CER/VTN | ----- | ----- | ----- | ----- | 55 |
| C | •SEAL HEAD ASSEMBLY | 2 | Y0900121-316 | 316/CBN/VTN | ----- | ----- | ----- | ----- | 60 |
| | •SEAL SEAT W/ O-RING (TFE) | 2 | Y1000121-000 | CER/VTN | ----- | ----- | ----- | ----- | 55 |
| E | •SEAL HEAD ASSEMBLY | 1 | 27092 | 316/CBN | ----- | ----- | ----- | ----- | 60 |
| | •SEAL SEAT W/ O-RING (TFE) | 2 | Y1000209-000 | SIC/TFE | ----- | ----- | ----- | ----- | 55 |
| P | •SEAL HEAD ASSEMBLY | 1 | Y0901621-316 | 316/PPO/EPR | ----- | ----- | ----- | ----- | 60 |
| | •SEAL SEAT W/ O-RING (TFE) | 1 | Y1000209-000 | SIC/TFE | ----- | ----- | ----- | ----- | 55 |
| Q | •SEAL HEAD ASSEMBLY | 1 | 27097 | 020/TFE | 27099 | HCO/TFE | 27097 | 020/TFE | 60 |
| | •SEAL SEAT W/ O-RING (TFE) | 1 | Y1000209-000 | SIC/TFE | Y1000209-000 | SIC/TFE | Y1000209-000 | SIC/TFE | 55 |
| U | •SEAL HEAD ASSEMBLY | 1 | 27089 | 020/CBN | 27090 | HCO/CBN | 27089 | 020/CBN | 60 |
| | •SEAL SEAT W/ O-RING (TFE) | 1 | Y1000209-000 | SIC/TFE | Y1000209-000 | SIC/TFE | Y1000209-000 | SIC/TFE | 55 |
| EXTERNAL MECHANICAL SEAL | | | | | | | | | |
| GA8 COMMON PARTS | SEAL RETAINER | 1 | 21783 | 316SS | 21784 | ALLOY C | 21785 | ALLOY 20 | 36 |
| | BOLT SEAL RETAINER | 2 | W770403-188 | 188SS | W770403-188 | 188SS | W770403-188 | 188SS | 39A |
| | PLUG 1/8" NPT | •2 | W772565-316 | 316SS | 52301 | ALLOY C | 52300 | ALLOY 20 | 62 |
| GC8 COMMON PARTS | BOLT, C-FACE ADAPTOR | 4 | W770403-188 | 188SS | W770403-188 | 188SS | W770403-188 | 188SS | 39A |
| | PLUG 1/8" NPT | •2 | W772565-316 | 316SS | 52301 | ALLOY C | 52300 | ALLOY 20 | 62 |
| | MOTOR BOLT | 4 | W770425-188 | 188SS | W770425-188 | 188SS | W770425-188 | 188SS | 25 |
| | C-FACE MOTOR ADAPTOR | 1 | 49725 | ALUMINUM | 49725 | ALUMINUM | 49725 | ALUMINUM | 66 |
| | COUPLING L-075 56C FR | 1 | W213232-000 | STEEL | W213232-000 | STEEL | W213232-000 | STEEL | 68 |
| | ASSEMBLY INSTRUCTIONS | 1 | 20051-A | ----- | 20051-A | ----- | 20051-A | ----- | -- |
| V | •SEAL HEAD ASSEMBLY | 1 | 27089 | 020/CBN | 27090 | HCO/CBN | 27089 | 020/CBN | 60 |
| | •SEAT ASSY EXT SEAL | 1 | 21580 | 316/TFE | 21582 | HCO/TFE | 21581 | 020/TFE | 55 |
| W | •SEAL HEAD ASSEMBLY | 1 | 27089 | 020/CBN | 27090 | HCO/CBN | 27089 | 020/CBN | 60 |
| | •SEAT ASSY,EXT SEAL | 1 | 21583 | SIC/TFE | 21583 | SIC/TFE | 21583 | SIC/TFE | 55 |
| POSITION 9 OPTIONS - DELETE CORRESPONDING STANDARD PUMP COMPONENT FROM B/M | | | | | | | | | |
| A | HOUSING FRONT - BRG FLUSH | 1 | 40156-1 | 316SS | 40157-1 | ALLOY C | 40158-1 | ALLOY 20 | 1 |
| | HOUSING REAR - BRG FLUSH | 1 | 40224 | 316SS | 40231 | ALLOY C | 40234 | ALLOY 20 | 3 |
| C | PLUG 1/8" NPT | •3 | W772565-316 | 316SS | 52301 | ALLOY C | 52300 | ALLOY 20 | 62 |
| B | •PIN BEARING LOCK | 4 | 41802 | ALLOY 20 | 41806 | ALLOY C | 41802 | ALLOY 20 | 14 |
| | •O-RING HOUSING | 2 | 41107 | SS/PFA | 41107 | SS/PFA | 41107 | SS/PFA | 16 |
| D | •BEARING SLOTTED | 4 | 40428 | CARBON | 40428 | CARBON | 40428 | CARBON | 12 13 |
| | •BEARING SLOTTED | | 40417 | TFE(GF) | 40417 | TFE(GF) | 40417 | TFE(GF) | 12,13 |
| E | •WEAR PLATE, SLOTTED | 4 | 40511 | CARBON | 40511 | CARBON | 40511 | CARBON | 15 |
| | •WEAR PLATE SLOTTED | | 40513 | TFE(GF) | 40513 | TFE(GF) | 40513 | TFE(GF) | 15 |
| G | MOTOR BOLT | 4 | W770545-188 | 188SS | W770545-188 | 188SS | W770545-188 | 188SS | 25 |
| | C-FACE MOTOR ADAPTOR 71 FR | 1 | 49744 | ALUMINUM | 49744 | ALUMINUM | 49744 | ALUMINUM | 66 |
| | COUPLING L-070 71 FR | 1 | W213582-000 | STEEL | W213582-000 | STEEL | W213582-000 | STEEL | 68 |
| K | MOTOR BOLT | 4 | W770546-188 | 188SS | W770546-188 | 188SS | W770546-188 | 188SS | 25 |
| | C-FACE MOTOR ADAPTOR 80 FR | 1 | 49745 | ALUMINUM | 49745 | ALUMINUM | 49745 | ALUMINUM | 66 |
| | COUPLING L-075 80 FR | 1 | W213584-000 | STEEL | W213584-000 | STEEL | W213584-000 | STEEL | 68 |
| L | CPLG EXT SEAL L-090 143TC-184C FR | 1 | W212230-000 | STEEL | W213230-000 | STEEL | W213230-000 | STEEL | 68 |
| | COUPLING L-095 143TC-184C FR | | W213231-000 | STEEL | W213231-000 | STEEL | W213231-000 | STEEL | 68 |
| M | MOTOR BOLT | 4 | W770547-188 | 188SS | W770547-188 | 188SS | W770547-188 | 188SS | 25 |
| | C-FACE MOTOR ADAPTOR 90 FR | 1 | 49746 | ALUMINUM | 49746 | ALUMINUM | 49746 | ALUMINUM | 66 |
| | COUPLING L-090 90 FR | 1 | W213586-000 | STEEL | W213586-000 | STEEL | W213586-000 | STEEL | 68 |
| V | HOUSING, CENTER - VENT FNPT | 1 | 40052-2 | 316SS | 40053-2 | ALLOY C | 40054-2 | ALLOY 20 | 2 |
| | HOUSING, CENTER - VENT FBSPT | | 40064-2 | 316SS | 40065-2 | ALLOY C | 40066-2 | ALLOY 20 | 2 |
| | PLUG 1/8" NPT | •1 | W772565-316 | 316SS | 52301 | ALLOY C | 52300 | ALLOY 20 | 62 |

•COMPONENT QUANTITY MAY BE CUMULATIVE OVER ENTIRE B/M
•DENOTES RECOMMENDED SPARE PART

# GA12 SERIES PUMP
# CONSOLIDATED B/M

| | | | STANDARD PUMP MATERIAL | | | | | | |
|---|---|---|---|---|---|---|---|---|---|
| | | | 316SS (A K OR U) | | ALLOY C (C M OR V) | | ALLOY 20 (D N OR W) | | |
| | DESCRIPTION | QTY | PART NO | MATL | PART NO | MATL | PART NO | MATL | ITEM |
| POSITION 7 SHAFT AND BEARING MATERIAL (CONT'D) | | | | | | | | | |
| EXTENDED LIFE - BEARINGS | | | | | | | | | |
| L | •BEARING 1" BORE | 2-4 | 90437 | EWCBN | 90437 | EWCBN | 90437 | EWCBN | 12 13 |
| | •BEARING 3/4" BORE | 0-2 | 90438 | EWCBN | 90438 | EWCBN | 90438 | EWCBN | 13 |
| | •SHAFT MTL DRIVE GR 1" DIA | 1 | 90307 | 316SS | 90317 | ALLOY C | 90315 | ALLOY 20 | 4 |
| | •SHAFT IDLER 3/4" DIA | 1 | 90306 | 316SS | 90322 | ALLOY C | 90334 | ALLOY 20 | 5 |
| | •SHAFT CBN IDLER GR 3/4" DIA | | 90346 | 316SS | 90347 | ALLOY C | 90348 | ALLOY 20 | 5 |
| EXTENDED LIFE - BEARINGS AND "CW" SHAFTS | | | | | | | | | |
| C | •BEARING 1" BORE | 2-4 | 90437 | EWCBN | 90437 | EWCBN | 90437 | EWCBN | 12 13 |
| | •BEARING 3/4" BORE | 0-2 | 90438 | EWCBN | 90438 | EWCBN | 90438 | EWCBN | 13 |
| | •SHAFT MTL DRIVE GR 1" DIA | 1 | 90307-2 | CW316 | 90317-2 | CWALYC | 90315-2 | CWALY20 | 4 |
| | •SHAFT IDLER 3/4" DIA | 1 | 90376 | CW316 | 90377 | CWALYC | 90378 | CWALY20 | 5 |
| | •SHAFT CBN IDLER GR 3/4 DIA | | 90346-4 | CW316 | 90347-2 | CWALYC | 90348-2 | CWALY20 | 5 |
| POSITION 8 SEAL ARRANGEMENT | | | | | | | | | |
| LANTERN RING STUFFING BOX | | | | | | | | | |
| COMMON PARTS | PACKING GLAND | 1 | A91517 | ALLOY C | A91517 | ALLOY C | A91517 | ALLOY C | 38 |
| | LANTERN RING | 1 | 97104 | ALLOY 20 | 97105 | ALLOY C | 97104 | ALLOY 20 | 46 |
| | STUD PACKING GLAND | 2 | 92014 | ALLOY 20 | 92012 | ALLOY C | 92014 | ALLOY 20 | 39 |
| | NUT, STUD | 2 | 92103 | ALLOY 20 | 92102 | ALLOY C | 92103 | ALLOY 20 | 40 |
| | GREASE FITTING | 1 | 27201 | 310SS | 27201 | 310SS | 27201 | 310SS | 65 |
| | PLUG 1/4" NPT | •1 | 16415 | 316SS | 16422 | ALLOY C | 16432 | ALLOY 20 | 63 |
| | ADAPTOR 1/4" TO 1/8" NPT | 1 | 27217 | ALLOY 20 | 27216 | ALLOY C | 27217 | ALLOY 20 | 64 |
| N | •PACKING RING | 6 | 96515 | TFE(BRD) | 96515 | TFE(BRD) | 96515 | TFE(BRD) | 42 |
| | •PACKING END RING | 1 | 96505 | TFE | 96505 | TFE | 96505 | TFE | 41 |
| R | •PACKING RING | 7 | 96510 | GRAFOIL | 96510 | GRAFOIL | 96510 | GRAFOIL | 42 |
| INTERNAL MECHANICAL SEAL | | | | | | | | | |
| COMMON PARTS | SEAT RETAINER W/ PIN | 1 | A91564 | ALLOY 20 | A91560 | ALLOY C | A91564 | ALLOY 20 | 36 |
| | BOLT, SEAT RETAINER | •2 | W770413-188 | 188SS | 92007 | ALLOY C | W770413-188 | 188SS | 39A |
| | O-RING SEAT RETAINER | 1 | 19031 | TFE | 19031 | TFE | 19031 | TFE | 37 |
| | PLUG 1/4" NPT | •3 | 16415 | 316SS | 16422 | ALLOY C | 16432 | ALLOY 20 | 63 |
| | •SEAL HEAD ASSEMBLY | 1 | A97001 | 316/CBN | A97023 | HC0/CBN | A97011 | 020/CBN | 60 |
| U | •SEAL SEAT W/ SEAL RING (TFE) | 1 | A97059 | SICBD | A97059 | SICBD | A97059 | SICBD | 55 |
| 24 | •SEAL SEAT W/ SEAL RING (TFE) | 1 | A91569 | ALLOY 20 | A91570 | ALLOY C | A91569 | ALLOY 20 | 55 |
| DOUBLE MECHANICAL SEAL | | | | | | | | | |
| COMMON PARTS | SEAT RETAINER W/ PIN | 1 | A91564 | ALLOY 20 | A91560 | ALLOY C | A91564 | ALLOY 20 | 36 |
| | BOLT SEAT RETAINER | •2 | W770413-188 | 188SS | 92007 | ALLOY C | W770413-188 | 188SS | 39A |
| | O-RING SEAT RETAINER | 1 | 19031 | TFE | 19031 | TFE | 19031 | TFE | 37 |
| | PLUG 1/4" NPT | •1 | 16415 | 316SS | 16422 | ALLOY C | 16432 | ALLOY 20 | 63 |
| | PIN PUMP END SEAT | 1 | 91565 | ALLOY 20 | 91561 | ALLOY C | 91565 | ALLOY 20 | 59 |
| | •SEAL HEAD ASSEMBLY | 1 | A97022 | 020/CBN | A97027 | HC0/CBN | A97022 | 020/CBN | 60 |
| E | •SEAL SEAT W/ SEAL RING (TFE | 2 | A97059 | SICBD | A97059 | SICBD | A97059 | SICBD | 55 |
| 44 | •SEAL SEAT W/ SEAL RING (TFE) | 2 | A91569 | ALLOY 20 | A91570 | ALLOY C | A91569 | ALLOY 20 | 55 |
| POSITION 9 OPTIONS - DELETE CORRESPONDING STANDARD PUMP COMPONENT FROM B/M | | | | | | | | | |
| V | HOUSING CENTER - VENT FNPT | 1 | 90001-2 | 316SS | 90006-2 | ALLOY C | 90005-2 | ALLOY 20 | 2 |
| | HOUSING, CENTER - VENT FBSPT | | 90012-2 | 316SS | 90013-2 | ALLOY C | 90014-2 | ALLOY 20 | 2 |
| | HOUSING CENTER - VENT FLGD | | 90003-2 | 316SS | 90007-2 | ALLOY C | 90010-2 | ALLOY 20 | 2 |
| | PLUG 1/8" NPT | •1 | W772565-316 | 316SS | 52301 | ALLOY C | 52300 | ALLOY 20 | 62 |
| B | •O-RING HOUSING | 2 | 91106 | SS/PFA | 91106 | SS/PFA | 91106 | SS/PFA | 16 |
| J | •SHAFT, MTL IDLER GR 1" DIA | 1 | 90308 | 316SS | 90318 | ALLOY C | 90364 | ALLOY 20 | 5 |

•COMPONENT QUANTITY MAY BE CUMULATIVE OVER ENTIRE B/M
•DENOTES RECOMMENDED SPARE PART

# GA12 SERIES PUMP
# CONSOLIDATED B/M

| | | | STANDARD PUMP MATERIAL | | | | | | |
|---|---|---|---|---|---|---|---|---|---|
| | | | 316SS (A K OR U) | | ALLOY C (C H OR V) | | ALLOY 20 (D N OR W) | | |
| | DESCRIPTION | QTY | PART NO | MATL | PART NO | MATL | PART NO | MATL | ITEM |
| POSITION 3 | STANDARD PUMP - NON-VARIABLE COMPONENTS | | | | | | | | |
| | HOUSING FRONT - MECH SEAL | 1 | 90129 | 316SS | 90130 | ALLOY C | 90131 | ALLOY 20 | 1 |
| | HOUSING FRONT - LRS SEAL | | 90138 | 316SS | 90140 | ALLOY C | 90139 | ALLOY 20 | 1 |
| | HOUSING CENTER FNPT | 1 | 90001 | 316SS | 90006 | ALLOY C | 90005 | ALLOY 20 | 2 |
| | HOUSING CENTER FBSPT | | 90012 | 316SS | 90013 | ALLOY C | 90014 | ALLOY 20 | 2 |
| | HOUSING CENTER FLGD | | 90003 | 316SS | 90007 | ALLOY C | 90010 | ALLOY 20 | 2 |
| | HOUSING REAR | 1 | 90201 | 316SS | 90205 | ALLOY C | 90204 | ALLOY 20 | 3 |
| | •RING RETAINING - DR/IDLR 1" | 2-4 | 96702 | 316SS | 96708 | ALLOY C | 96708 | ALLOY C | 10 |
| | •RING RETAINING - IDLER 3/4" | 0-2 | 96701 | 316SS | 96709 | ALLOY C | 96709 | ALLOY C | 11 |
| | •KEY DRIVE/IDLER GR 1" BORE | 1-2 | 91904 | 316SS | 91910 | ALLOY C | 91910 | ALLOY C | 8 9 |
| | •KEY, MTL IDLER GR 3/4" BORE | 0-1 | 91903 | 316SS | 91911 | ALLOY C | 91911 | ALLOY C | 9 |
| | •KEY CBN IDLER GR 3/4" BORE | 0-2 | 91925 | 316SS | 91926 | ALLOY C | 91926 | ALLOY C | 9 |
| | •KEY, PISTC IDL GR 3/4" BORE | 0-2 | 91901 | 316SS | 91912 | ALLOY C | 91914 | ALLOY C | 9 |
| | •PIN BEARING LOCK | ** | 90801 | 316SS | 90803 | ALLOY C | 90803 | ALLOY C | 14 |
| | •O-RING HOUSING | 2 | 91101 | TFE | 91101 | TFE | 91101 | TFE | 16 |
| | PIN HOUSING | ** | 90801 | 316SS | 90801 | 316SS | 90801 | 316SS | 17 |
| | BOLT CTR HSG FNPT FBSPT | **10 | W770413-188 | 188SS | W770413-188 | 188SS | W770413-188 | 188SS | 18A |
| | BOLT CTR HSG FNPT FBSPT | 1 | W770422-188 | 188SS | W770422-188 | 188SS | W770422-188 | 188SS | 18A |
| | NUT HSG BOLT FNPT FBSPT | 11 | W771214-188 | 188SS | W771214-188 | 188SS | W771214-188 | 188SS | 19 |
| | LOCK WASHER FNPT FBSPT | 11 | W771107-188 | 188SS | W771107-188 | 188SS | W771107-188 | 188SS | 20 |
| | BOLT, CENTER HSG FLGD | 12 | W770412-188 | 188SS | W770412-188 | 188SS | W770412-188 | 188SS | 18A |
| | LOCK WASHER FLGD | 12 | W771107-188 | 188SS | W771107-188 | 188SS | W771107-188 | 188SS | 20 |
| | PLUG 1/4" NPT | ** | 16415 | 316SS | 16422 | ALLOY C | 16432 | ALLOY 20 | 63 |
| | KEY COUPLING/DRIVE SHAFT | 1 | 91924 | STL | 91924 | STL | 91924 | STL | 21 |
| | PLUG 1/8" NPT | **1 | W772565-316 | 316SS | 52301 | ALLOY C | 52300 | ALLOY 20 | 62 |
| | NAMEPLATE | 1 | 41201 | 188SS | 41201 | 188SS | 41201 | 188SS | -- |
| POSITION 4 & 5 | DRIVE AND IDLER GEAR | | | | | | | | |
| C | •GEAR DRIVE/IDLER 1" BORE | 1-2 | 90627 | ALLOY C | 90627 | ALLOY C | 90627 | ALLOY C | 6 7 |
| | •GEAR IDLER 3/4" BORE | 0-1 | 90626 | ALLOY C | 90626 | ALLOY C | 90626 | ALLOY C | 7 |
| K | •GEAR IDLER 3/4" BORE | 0-1 | 90664 | CARBON | 90664 | CARBON | 90664 | CARBON | 7 |
| T | •GEAR IDLER 3/4" BORE | | 90663 | TFE(GF) | 90663 | TFE(GF) | 90663 | TFE(GF) | 7 |
| E | •GEAR IDLER 3/4" BORE | | 90677 | PEEK | 90677 | PEEK | 90677 | PEEK | 7 |
| POSITION 6 | WEAR PLATE MATERIAL | | | | | | | | |
| K | •WEAR PLATE SLOTTED | 4 | 90503 | CARBON | 90503 | CARBON | 90503 | CARBON | 15 |
| T | •WEAR PLATE SLOTTED | | 90510 | TFE(GF) | 90510 | TFE(GF) | 90510 | TFE(GF) | 15 |
| Z | •WEAR PLATE SLOTTED | | 90512 | CERAMIC | 90512 | CERAMIC | 90512 | CERAMIC | 15 |
| E | •WEAR PLATE SLOTTED | | 90515 | PEEK | 90515 | PEEK | 90515 | PEEK | 15 |
| POSITION 7 | SHAFT AND BEARING MATERIAL | | | | | | | | |
| STANDARD CONSTRUCTION | | | | | | | | | |
| K | •BEARING 1" BORE | 2-4 | 90424 | CARBON | 90424 | CARBON | 90424 | CARBON | 12 13 |
| | •BEARING 3/4" BORE | 0-2 | 90429 | CARBON | 90429 | CARBON | 90429 | CARBON | 13 |
| | •SHAFT MTL DRIVE GR 1" DIA | 1 | 90307 | 316SS | 90317 | ALLOY C | 90315 | ALLOY 20 | 4 |
| | •SHAFT IDLER 3/4" DIA | 1 | 90306 | 316SS | 90322 | ALLOY C | 90334 | ALLOY 20 | 5 |
| | •SHAFT CBN IDLER GR 3/4" DIA | | 90346 | 316SS | 90347 | ALLOY C | 90348 | ALLOY 20 | 5 |
| T | •BEARING 1" BORE | 2-4 | 90428 | TFE(GF) | 90428 | TFE(GF) | 90428 | TFE(GF) | 12,13 |
| | •BEARING 3/4" BORE | 0-2 | 90430 | TFE(GF) | 90430 | TFE(GF) | 90430 | TFE(GF) | 12 13 |
| | •SHAFT MTL DRIVE GR 1" DIA | 1 | 90307 | 316SS | 90317 | ALLOY C | 90315 | ALLOY 20 | 4 |
| | •SHAFT IDLER 3/4" DIA | 1 | 90306 | 316SS | 90322 | ALLOY C | 90334 | ALLOY 20 | 5 |
| | •SHAFT CBN IDLER GR 3/4" DIA | | 90346 | 316SS | 90347 | ALLOY C | 90348 | ALLOY 20 | 5 |
| 4 | •BEARING SLOTTED 1" BORE | 2-4 | 90431 | CARBON | 90431 | CARBON | 90431 | CARBON | 13 |
| | •BEARING, SLOTTED 3/4" BORE | 0-2 | 90432 | CARBON | 90432 | CARBON | 90432 | CARBON | 13 |
| | •SHAFT MTL DRIVE GR 1" DIA | 1 | 90307 | 316SS | 90317 | ALLOY C | 90315 | ALLOY 20 | 4 |
| | •SHAFT IDLER 3/4" DIA | 1 | 90306 | 316SS | 90322 | ALLOY C | 90334 | ALLOY 20 | 5 |
| | •SHAFT CBN IDLER GR 3/4" DIA | | 90346 | 316SS | 90347 | ALLOY C | 90348 | ALLOY 20 | 5 |

•COMPONENT QUANTITY MAY BE CUMULATIVE OVER ENTIRE B/M

••QTY (2) WHEN PUMP HAS FNPT OR FBSPT CENTER HOUSING, COMPONENT QUANTITY MAY BE CUMULATIVE OVER ENTIRE B/M

•DENOTES RECOMMENDED SPARE PART

# GA16 SERIES PUMP
# CONSOLIDATED B/M

| DESCRIPTION | QTY | STANDARD PUMP MATERIAL 316SS (U) PART NO | 316SS (U) MATL | ALLOY C (V) PART NO | ALLOY C (V) MATL | ALLOY 20 (W) PART NO | ALLOY 20 (W) MATL | ITEM |
|---|---|---|---|---|---|---|---|---|
| POSITION 3 STANDARD PUMP - NON-VARIABLE COMPONENTS | | | | | | | | |
| HOUSING FRONT - MECH SEAL | 1 | 90129 | 316SS | 90130 | ALLOY C | 90131 | ALLOY 20 | 1 |
| HOUSING FRONT - LRS SEAL | | 90138 | 316SS | 90140 | ALLOY C | 90139 | ALLOY 20 | 1 |
| HOUSING, CENTER FLGD | 1 | 90020 | 316SS | 90021 | ALLOY C | 90022 | ALLOY 20 | 2 |
| HOUSING REAR | 1 | 90201 | 316SS | 90205 | ALLOY C | 90204 | ALLOY 20 | 3 |
| *RING RETAINING - DR/IDLER 1" | 2-4 | 96702 | 316SS | 96708 | ALLOY C | 96708 | ALLOY C | 10 11 |
| *RING RETAINING - IDLER 3/4" | 0-2 | 96701 | 316SS | 96709 | ALLOY C | 96709 | ALLOY C | 11 |
| *KEY MTL DR/IDLER GR 1" BORE | 2-4 | 91904 | 316SS | 91910 | ALLOY C | 91910 | ALLOY C | 8 9 |
| *KEY CBN/PLSTC GEAR 3/4" BORE | 0-2 | 91929 | ALLOY C | 91929 | ALLOY C | 91929 | ALLOY C | 9 |
| *PIN BEARING LOCK | *4 | 90801 | 316SS | 90803 | ALLOY C | 90803 | ALLOY C | 14 |
| *O-RING HOUSING | 2 | 91101 | TFE | 91101 | TFE | 91101 | TFE | 16 |
| PIN HOUSING | *4 | 90801 | 316SS | 90801 | 316SS | 90801 | 316SS | 17 |
| BOLT CTR HSG FLGD | 12 | W770417-188 | 188SS | W770412-188 | 188SS | W770412-188 | 188SS | 18A |
| LOCK WASHER | 12 | W771107-188 | 188SS | W771107-188 | 188SS | W771107-188 | 188SS | 20 |
| PLUG, 1/4 NPT | *6 | 16415 | 316SS | 16422 | ALLOY C | 16432 | ALLOY 20 | 63 |
| KEY COUPLING/DRIVE SHAFT | 1 | 91924 | STL | 91924 | STL | 91924 | STL | 21 |
| NAMEPLATE | 1 | 41201 | 188SS | 41201 | 188SS | 41201 | 188SS | -- |
| POSITION 4 & 5 DRIVE AND IDLER GEAR | | | | | | | | |
| C *GEAR DRIVE/IDLER 1" BORE | 1-2 | 90667 | ALLOY C | 90667 | ALLOY C | 90667 | ALLOY C | 6 7 |
| K *GEAR IDLER 3/4" BORE | 0-1 | 90676 | CARBON | 90676 | CARBON | 90676 | CARBON | 7 |
| T *GEAR IDLER 3/4" BORE | | 90670 | TFE(GF) | 90670 | TFE(GF) | 90670 | TFE(GF) | 7 |
| E *GEAR IDLER 3/4" BORE | | 90678 | PEEK | 90678 | PEEK | 90678 | PEEK | 7 |
| POSITION 6 WEAR PLATE MATERIAL | | | | | | | | |
| K *WEAR PLATE SLOTTED | 4 | 90503 | CARBON | 90503 | CARBON | 90503 | CARBON | 15 |
| T *WEAR PLATE SLOTTED | | 90510 | TFE(GF) | 90510 | TFE(GF) | 90510 | TFE(GF) | 15 |
| Z *WEAR PLATE SLOTTED | | 90512 | CERAMIC | 90512 | CERAMIC | 90512 | CERAMIC | 15 |
| E *WEAR PLATE SLOTTED | | 90515 | PEEK | 90515 | PEEK | 90515 | PEEK | 15 |
| POSITION 7 SHAFT AND BEARING MATERIAL | | | | | | | | |
| STANDARD CONSTRUCTION | | | | | | | | |
| K *BEARING 1" BORE | 2-4 | 90424 | CARBON | 90424 | CARBON | 90424 | CARBON | 12,13 |
| *BEARING 3/4" BORE | 0-2 | 90429 | CARBON | 90429 | CARBON | 90429 | CARBON | 13 |
| *SHAFT DRIVE 1" | 1 | 90355 | 316SS | 90357 | ALLOY C | 90356 | ALLOY 20 | 4 |
| *SHAFT CBN/PLSTC IDLER 3/4" | 1 | 90362 | ALLOY 20 | 90361 | ALLOY C | 90362 | ALLOY 20 | 5 |
| *SHAFT MTL IDLER 1" | | 90349 | 316SS | 90351 | ALLOY C | 90350 | ALLOY 20 | 5 |
| T *BEARING 1" BORE | 2-4 | 90428 | TFE(GF) | 90428 | TFE(GF) | 90428 | TFE(GF) | 12 13 |
| *BEARING 3/4" BORE | 0-2 | 90430 | TFE(GF) | 90430 | TFE(GF) | 90430 | TFE(GF) | 13 |
| *SHAFT DRIVE 1" | 1 | 90355 | 316SS | 90357 | ALLOY C | 90356 | ALLOY 20 | 4 |
| *SHAFT CBN/PLSTC IDLER 3/4 | 1 | 90362 | ALLOY 20 | 90361 | ALLOY C | 90362 | ALLOY 20 | 5 |
| *SHAFT MTL IDLER 1" | | 90349 | 316SS | 90351 | ALLOY C | 90350 | ALLOY 20 | 5 |
| 4 *BEARING SLOTTED 1" BORE | 2-4 | 90431 | CARBON | 90431 | CARBON | 90431 | CARBON | 12,13 |
| *BEARING SLOTTED 3/4" BORE | 0-2 | 90432 | CARBON | 90432 | CARBON | 90432 | CARBON | 13 |
| *SHAFT DRIVE 1 | 1 | 90355 | 316SS | 90357 | ALLOY C | 90356 | ALLOY 20 | 4 |
| *SHAFT CBN/PLSTL IDLER 3/4 | 1 | 90362 | ALLOY 20 | 90361 | ALLOY C | 90362 | ALLOY 20 | 5 |
| *SHAFT MTL IDLER 1 | | 90349 | 316SS | 90351 | ALLOY C | 90350 | ALLOY 20 | 5 |
| EXTENDED LIFE - BEARINGS | | | | | | | | |
| L *BEARING 1" BORE | 2-4 | 90437 | EWCBN | 90437 | EWCBN | 90437 | EWCBN | 12 13 |
| *BEARING 3/4" BORE | 0-2 | 90438 | EWCBN | 90438 | EWCBN | 90438 | EWCBN | 13 |
| *SHAFT DRIVE 1" | 1 | 90355 | 316SS | 90357 | ALLOY C | 90356 | ALLOY 20 | 4 |
| *SHAFT CBN/PLSTC IDLER 3/4" | 1 | 90362 | ALLOY 20 | 90361 | ALLOY C | 90362 | ALLOY 20 | 5 |
| *SHAFT MTL IDLER 1" | | 90349 | 316SS | 90351 | ALLOY C | 90350 | ALLOY 20 | 5 |
| EXTENDED LIFE - BEARINGS AND 'CW' SHAFTS | | | | | | | | |
| C *BEARING 1" BORE | 2-4 | 90437 | EWCBN | 90437 | EWCBN | 90437 | EWCBN | 12 13 |
| *BEARING 3/4" BORE | 0-2 | 90436 | EWCBN | 90436 | EWCBN | 90436 | EWCBN | 13 |
| *SHAFT DRIVE 1" | 1 | 90355-2 | CW316 | 90357-2 | CWALYC | 90356-2 | CWALY20 | 4 |
| *SHAFT CBN/PLSTC IDLER 3/4" | 1 | 90388 | CW316 | 90389 | CWALYC | 90390 | CWALY20 | 5 |
| *SHAFT MTL IDLER 1" | | 90385 | CW316 | 90386 | CWALYC | 90387 | CWALY20 | 5 |

*COMPONENT QUANTITY MAY BE CUMULATIVE OVER ENTIRE B/M
+DENOTES RECOMMENDED SPARE PART

# GA16 SERIES PUMP
# CONSOLIDATED B/M

| | | | STANDARD PUMP MATERIAL | | | | | | |
|---|---|---|---|---|---|---|---|---|---|
| | | | 316SS (U) | | ALLOY C (V) | | ALLOY 20 (W) | | |
| | DESCRIPTION | QTY | PART NO | MATL | PART NO | MATL | PART NO | MATL | ITEM |
| POSITION 8 SEAL ARRANGEMENT | | | | | | | | | |
| LANTERN RING STUFFING BOX | | | | | | | | | |
| COMMON PARTS | PACKING GLAND | 1 | A91517 | ALLOY C | A91517 | ALLOY C | A91517 | ALLOY C | 7 |
| | LANTERN RING | 1 | 97104 | ALLOY 20 | 97105 | ALLOY C | 97104 | ALLOY 20 | 66 |
| | STUD PACKING GLAND | 2 | 92014 | ALLOY 20 | 92012 | ALLOY C | 92014 | ALLOY 20 | 39 |
| | NUT STUD | 2 | 92103 | ALLOY 20 | 92102 | ALLOY C | 92103 | ALLOY 20 | 40 |
| | GREASE FITTING | 1 | 27201 | 310SS | 27201 | 310SS | 27201 | 310SS | 65 |
| | PLUG 1/4" NPT | #1 | 16415 | 316SS | 16422 | ALLOY C | 16432 | ALLOY 20 | 63 |
| | ADAPTOR 1/4" TO 1/8" NPT | 1 | 27217 | ALLOY 20 | 27216 | ALLOY C | 27217 | ALLOY 20 | 64 |
| N | *PACKING RING | 6 | 96515 | TFE(BRD) | 96515 | TFE(BRD) | 96515 | TFE(BRD) | 42 |
| | *PACKING END RING | 1 | 96505 | TFE | 96505 | TFE | 96505 | TFE | 41 |
| R | *PACKING RING | 7 | 96510 | GRAFOIL | 96510 | GRAFOIL | 96510 | GRAFOIL | 42 |
| INTERNAL MECHANICAL SEAL | | | | | | | | | |
| COMMON PARTS | SEAT RETAINER W/ PIN | 1 | A91564 | ALLOY 20 | A91560 | ALLOY C | A91564 | ALLOY 20 | 36 |
| | BOLT SEAT RETAINER | 2 | W770413-188 | 188SS | 92007 | ALLOY C | W770413-188 | 188SS | 39A |
| | O-RING SEAT RETAINER | 1 | 19031 | TFE | 19031 | TFE | 19031 | TFE | 37 |
| | PLUG 1/4" NPT | #3 | 16415 | 316SS | 16422 | ALLOY C | 16432 | ALLOY 20 | 63 |
| | *SEAL HEAD ASSEMBLY | 1 | A97001 | 316/CBN | A97023 | HCO/CBN | A97011 | 020/CBN | 60 |
| U | *SEAL SEAT W/ SEAL RING (TFE) | 1 | A97059 | SICBD | A97059 | SICBD | A97059 | SICBD | 55 |
| 24 | *SEAL SEAT W/ SEAL RING (TFE) | 1 | A91569 | ALLOY 20 | A91570 | ALLOY C | A91569 | ALLOY 20 | 55 |
| DOUBLE MECHANICAL SEAL | | | | | | | | | |
| COMMON PARTS | SEAT RETAINER W/ PIN | 1 | A91564 | ALLOY 20 | A91560 | ALLOY C | A91564 | ALLOY 20 | 36 |
| | BOLT SEAT RETAINER | 2 | W770413-188 | 188SS | 92007 | ALLOY C | W770413-188 | 188SS | 39A |
| | O-RING SEAT RETAINER | 1 | 19031 | TFE | 19031 | TFE | 19031 | TFE | 37 |
| | PLUG 1/4" NPT | #1 | 16415 | 316SS | 16422 | ALLOY C | 16432 | ALLOY 20 | 63 |
| | PIN PUMP END SEAT | 1 | 91565 | ALLOY 20 | 91561 | ALLOY C | 91565 | ALLOY 20 | 59 |
| | *SEAL HEAD ASSEMBLY | 1 | A97022 | 020/CBN | A97027 | HCO/CBN | A97022 | 020/CBN | 60 |
| E | *SEAL SEAT W/ SEAL RING (TFE) | 2 | A97059 | SICBD | A97059 | SICBD | A97059 | SICBD | 55 |
| 44 | *SEAL SEAT W/ SEAL RING (TFE) | 2 | A91569 | ALLOY 20 | A91570 | ALLOY C | A91570 | ALLOY 20 | 55 |
| POSITION 9 OPTIONS - DELETE CORRESPONDING STANDARD PUMP COMPONENT FROM B/M | | | | | | | | | |
| 8 | *O-RING HOUSING | 2 | 91106 | SS/PFA | 91106 | SS/PFA | 91106 | SS/PFA | 16 |

*COMPONENT QUANTITY MAY BE CUMULATIVE OVER ENTIRE B/M
•DENOTES RECOMMENDED SPARE PART

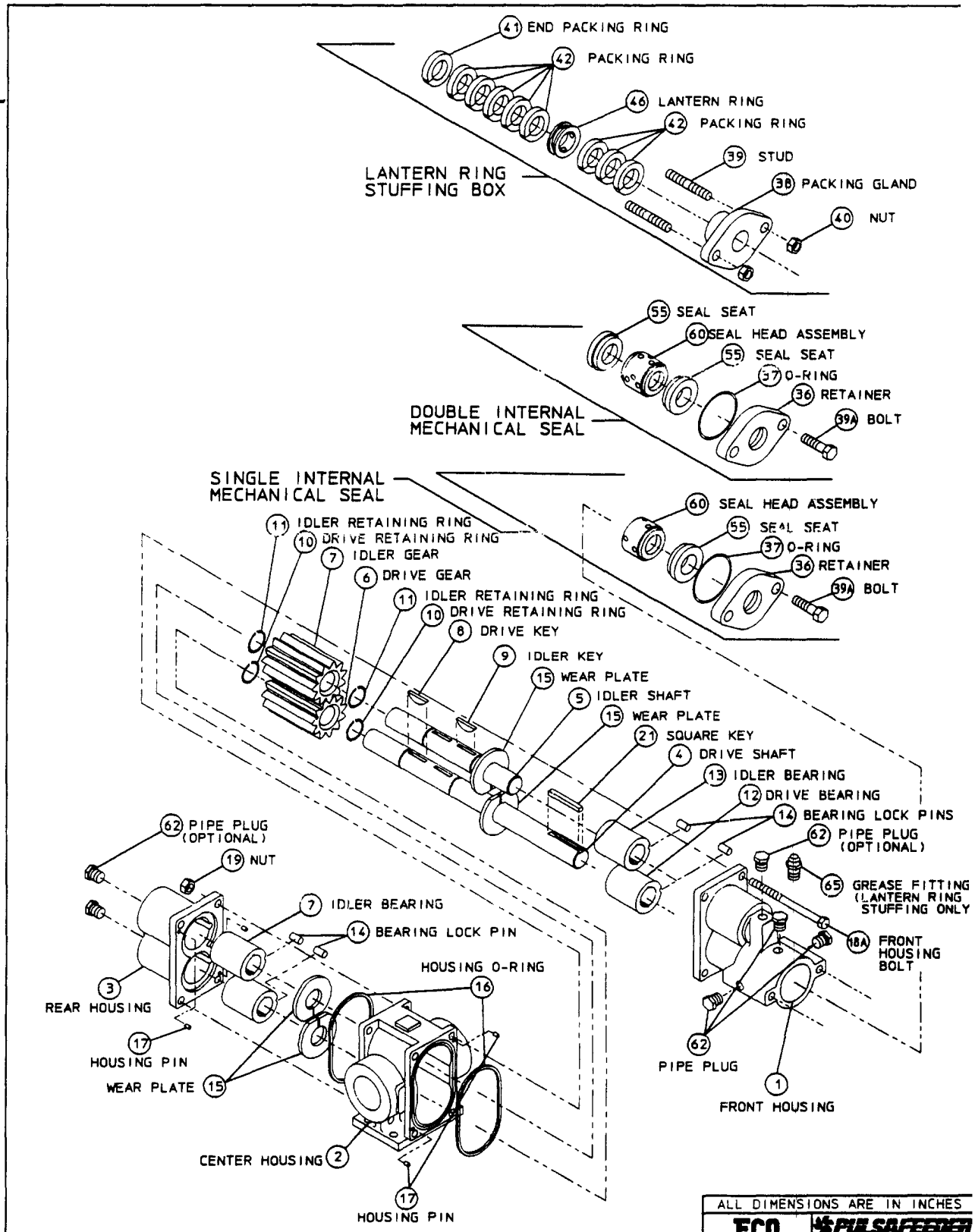


| REF | REVISION UPDATE | DATE |
|---|---|---|
| A | ADDED GH6 PUMP | 10/08/97 |

ALL DIMENSIONS ARE IN INCHES

ECO | PULSAFEEDER A Unit of IDEX Corporation

GH6-8 GEARCHEM PUMP EXPLODED VIEW

DWN BY CLA

DATE 04/04/94

SD-2775

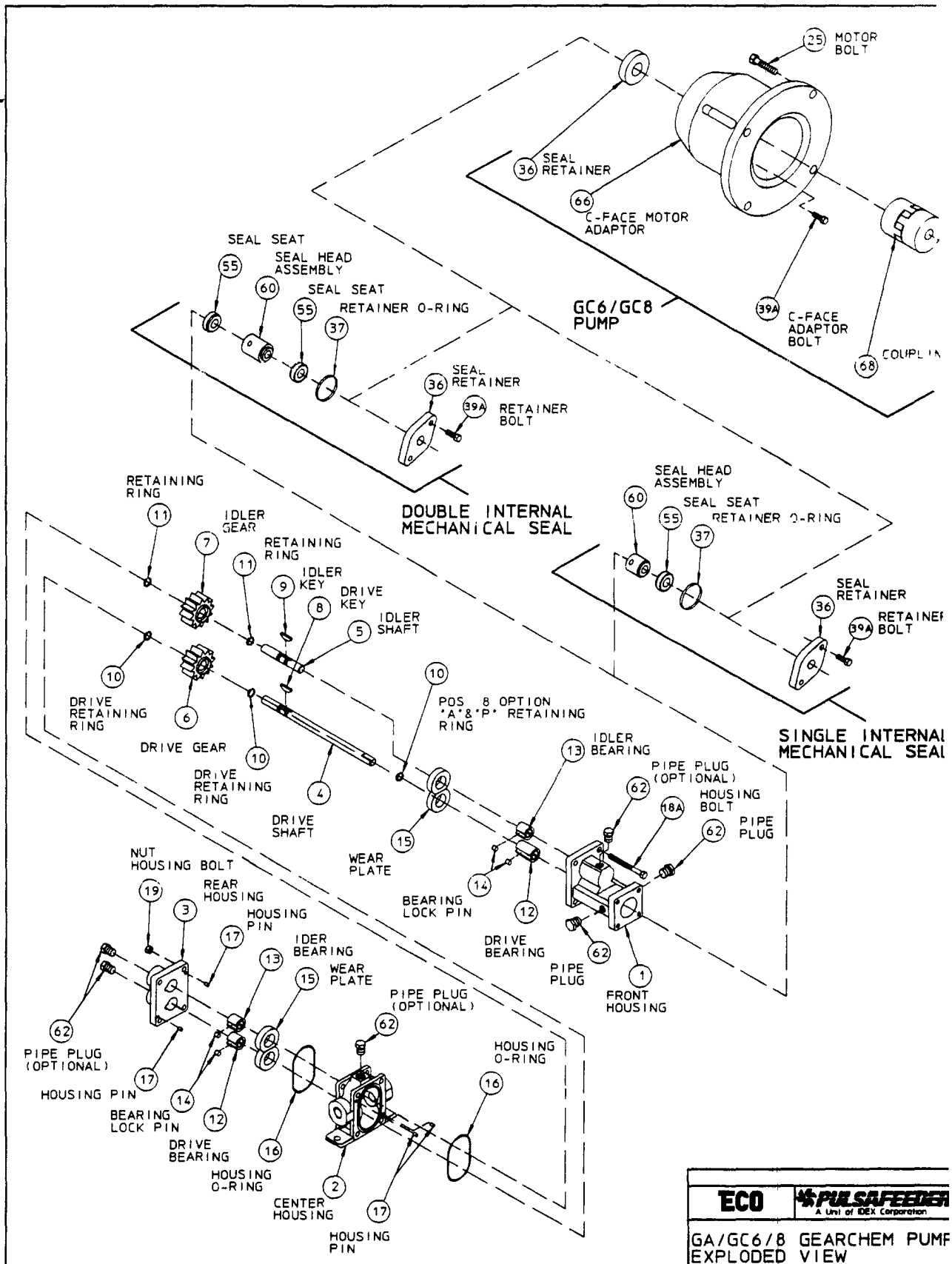


| REF | REVISION UPDATE | DATE |
|---|---|---|
| A | | |

ECO | PULSAFEEDER A Unit of IDEX Corporation

GA/GC6/8 GEARCHEM PUMP EXPLODED VIEW

DWN BY PRM
DATE 04/23/97

SD-2848

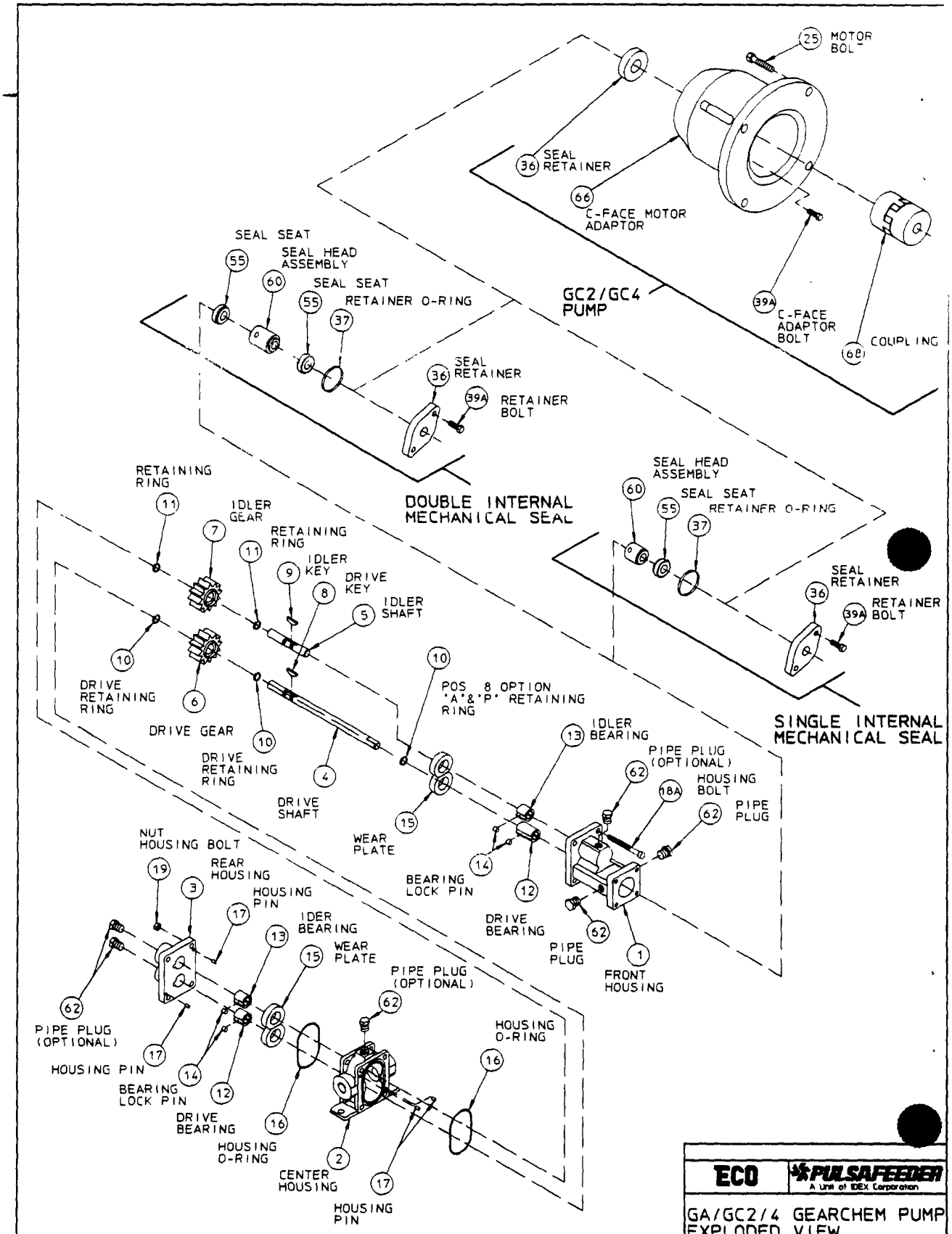


| REF | REVISION UPDATE | DATE |
|---|---|---|
| A | | |

ECO | PULSAFEEDER A Unit of IDEX Corporation

GA/GC2/4 GEARCHEM PUMP EXPLODED VIEW

DWN BY PFM
DATE 04/23/97

SD-2847

# ECO
## Gear Pumps

# KOPkits®

## Keep-On-Pumping Kits That Can Save You Time and Money.

ECO products have a reputation for superior reliability by supplying carefully designed high-quality equipment Even the best equipment requires a minimal amount of maintenance. **KOPkits** are designed to guard against unnecessary downtime and assure you the highest level of efficient and uninterrupted service from your ECO pumps.

**KOPkits** contain recommended spare parts generally required for normal maintenance. A typical kit includes shaft mounted drive and idler gears (with keys and retaining rings), wear plates, bearings and lock pins, housing o-rings, packing rings or seal assembly (with seat) and an exploded view assembly drawing.

**KOPkits** will save you money. When you need a part, you've got it! You can cut downtime and production loss from days to minutes. You also save by buying parts in KOPkit form compared with buying individual parts

Each **KOPkit** part is securely packed in a customized kit to protect parts when stored for long periods of time.

A **KOPkit** is a troubleshooter's best friend. In the event of a breakdown, it will put you back in business fast! Preventive maintenance will insure continuous high performance of your ECO pumps.

Keep on pumping! Get all the money saving and security benefits of ECO **KOPkits** immediately.

## Standard KOPkits

The **KOPkit** part number as shown below covers current models All ECO pumps have the model number stamped on the name plate.

This model number, prefixed by a "K", becomes the kit number.
The table on the next page can be used to identify most kit numbers.

## Special KOPkits

ECO Gearchem pumps have kits available for non-standard pumps.

Consult your representative or distributor for kit number and pricing.

Typical KOPkit Number

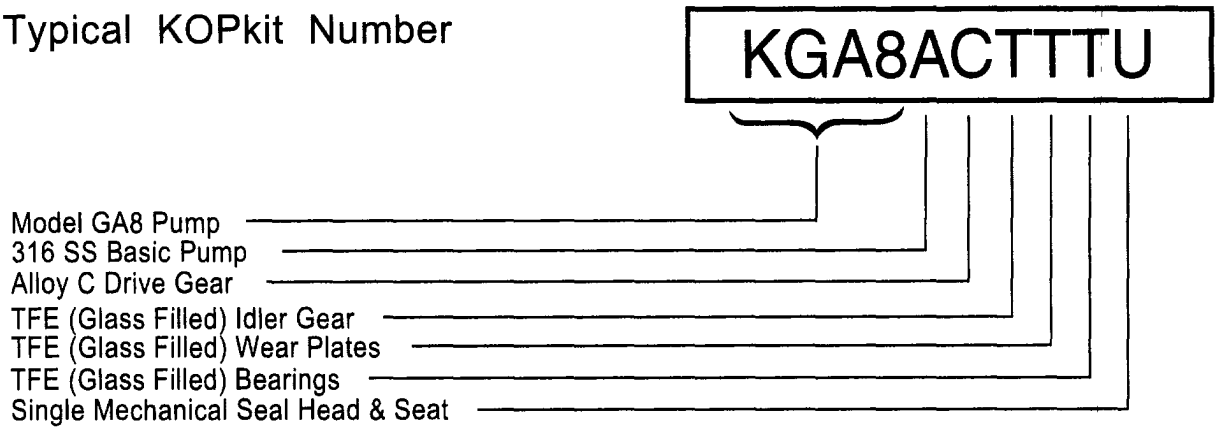


PULSAFEEDER®
**A Unit of IDEX Corporation**

IDEX
*Manufacturers of Quality Pumps, Controls and Systems*

# KOPkit® Nomenclature

K GA ___ ___ ___ ___ ___ ___ ___ ___ ___

Position No. 1 2 3 4 5 6 7 8 9

| Position 1 Series G = Gearchem External Spur Gear Pump | | |
|---|---|---|
| G = | Original version, foot mounted only | 2, 4, 6, 8 |
| GA = | Mechanical Seal, foot mounted only | 2, 4, 6, 8, 12, 16 |
| GC = | Mechanical Seal, C-face motor mounting assembly | 2, 4, 6, 8 |
| GH = | Higher pressure model, foot mounted only | 6, 8 |

| Position 2 Pump Size | 2 | 4 | 6 | 8 | H6 | H8 | 12 | 16 |
|---|---|---|---|---|---|---|---|---|
| Port Size | 25" | 50" | 75" | 1 0" | 75" | 1 0" | 1 5" | 2 0" |
| Capacity (GPM Max) | 1 5 | 3 | 10 | 20 | 10 | 20 | 26 | 55 |
| Differential pressure (PSIG Max) | 100 | 100 | 100 | 50 | 200 | 100 | 100 | 100 |

| Position 3 Available Pump Metallurgy's / Type Port Connections | | | | | | | | | |
|---|---|---|---|---|---|---|---|---|---|
| A = 316SS | FNPT | X | X | X | X | X | X | X | |
| C = Alloy C | FNPT | X | X | X | X | X | X | X | |
| D = Alloy 20 | FNPT | X | X | X | X | X | X | X | |
| K = 316SS | FBSPT | X | X | X | X | X | X | X | |
| M = Alloy C | FBSPT | X | X | X | X | X | X | X | |
| N = Alloy 20 | FBSPT | X | X | X | X | X | X | X | |
| U = 316SS | Flanged | | | | | | | X | X |
| V = Alloy C | Flanged | | | | | | | X | X |
| W = Alloy 20 | Flanged | | | | | | | X | X |

| Position 4 Drive Gear Material | | | | | | | | |
|---|---|---|---|---|---|---|---|---|
| C = Alloy C | X | X | X | X | X | X | X | X |
| D = Alloy 20 | X | X | X | X | | | | |
| T = TFE (Glass filled) | X | X | X | X | | | | |
| E = Peek | X | X | X | X | | | | |

| Position 5 Idler Gear Material | | | | | | | | |
|---|---|---|---|---|---|---|---|---|
| C = Alloy C | X | X | X | X | X | X | X | X |
| D = Alloy 20 | X | X | X | X | | | | |
| K = Carbon | X | X | X | X | | X | X | X |
| T = TFE (Glass filled) | X | X | X | X | | X | X | X |
| E = Peek | X | X | X | X | X | X | X | X |

| Position 6 Wear Plate Material | | | | | | | | |
|---|---|---|---|---|---|---|---|---|
| K = Carbon | X | X | X | X | X | X | X | X |
| T = TFE (Glass filled) | | X | X | X | X | X | X | X |
| 2 = Ceramic | X | X | X | X | X | X | X | X |
| E = Peek | X | X | X | X | X | X | | |

| Position 7 Shaft & Bearing Material | | | | | | | | |
|---|---|---|---|---|---|---|---|---|
| K = Standard Carbon | X | X | X | X | X | X | X | X |
| T = TFE (Glass filled) | X | X | X | X | | X | X | X |
| L = Extended Life Carbon | X | X | X | X | X | X | X | X |
| C = Extended Life Carbon - "CW" Shafts | X | X | X | X | X | X | X | X |
| 4 = Standard Carbon Slotted | | | | | | | X | X |

| Position 8 Seal Arrangement | | G 2-4 | GA/GC 2-4 | G 6-8 | GA/GC 6-8 | GH 6 | GH 8 | GA 12-16 |
|---|---|---|---|---|---|---|---|---|
| **Packing** | | | | | | | | |
| B = TFE Rings | | X | | X | | | | |
| G = Grafoil (*) Rings | | X | | X | | | | |
| J = Viton Lip Seal H-C Spring | | X | | X | | | | |
| N = TFE Rings / Lantern | | X | | X | | X | X | X |
| R = Grafoil (*) / Lantern | | X | | X | | X | X | X |
| **Mechanical Seals Bellows** | | | | | | | | |
| A = | Single Seal Carbon Rotary / Viton Ceramic Seat / Viton | | X | | X | | | |
| C = | Double Seal Carbon Rotary / Viton Ceramic Seat / Viton | | X | | X | | | |
| P = | Single Seal Siliconized CBN Rotary /EPR Silicon CBD Seat / TFE | | X | | X | | | |
| **Wedge** | | | | | | | | |
| E = | Double Seal Carbon Rotary / TFE Silicon CBD Seat / TFE | | X | | X | X | X | X |
| K = | Single Seal Teflon Rotary / TFE Metallic Seat / TFE | X | | X | | | | |
| Q = | Single Seal Teflon Rotary / TFE Silicon CBD Seat / TFE | | X | | X | X | X | |
| T = | Single Seal Carbon Rotary / TFE Metallic Seat / TFE | X | | X | | | | |
| U = | Single Seal Carbon Rotary / TFE Silicon CBD Seat / TFE | | X | | X | X | X | X |
| V = | External Seal Carbon Rotary / TFE Metallic Seat / TFE | | X | | X | | | |
| W = | External Seal Carbon Rotary / TFE Silicon CBD Seat / TFE | | X | | X | | | |
| Y = | Double Seal Carbon Rotary / TFE Metallic Seat / TFE | X | | X | | | | |
| Z = | External Seal Vacuum Carbon Rotary / TFE Metallic Seat / TFE | X | | X | | | | |
| 24 = | Single Seal Carbon Rotary / TFE Metallic Seat / TFE | | | | | | | X |
| 44 = | Double Seal Carbon Rotary / TFE Metallic Seat / TFE | | | | | | | X |

| Position 9 Options – Pump Size | | 2 | 4 | 6 | 8 | 6 | 8 | 12 | 16 |
|---|---|---|---|---|---|---|---|---|---|
| B = | PFA coated SS Hsg O-Rings, Metallic Bearing Lock Pins | X | X | X | X | X | X | X | X |
| C = | Bearing Flush Ports, PFA Coated SS Hsg O-Rings, Metallic Bearing Lock Pins | X | X | X | X | X | X | | |
| D = | Bearing Flush Ports, PFA Coated SS Hsg O-Rings, Metallic Bearing Lock Pins, Slotted Bearings | X | X | X | X | X | X | | |
| E = | Bearing Flush Ports, PFA Coated SS Hsg O-Rings, Metallic Bearing Lock Pins, Slotted Bearings, Slotted Wear plates | X | X | X | X | | | | |
| J = | GA12 with 1" Idler Shaft (Metallic Gear Only) | | | | | | | X | |
| N = | Narrow Width Gears | | X | X | | | | | |
| T = | Temperature Trimmed Plastic Gear | X | X | X | X | X | X | X | X |


PULSAFEEDER®
A Unit of IDEX Corporation

Engineered Pump Operations
2883 Brighton-Henrietta Townline Road
Rochester, New York 14623
Telephone (716) 292-8000 Fax (716) 424-5619
http //www pulsa com E-mail pulsa@pulsa com

IDEX CORPORATION