CALL TOLL FREE 877-742-2878 FOR SALES AND SUPPORT

Return to BurtProcess.com

HEAVY DUTY

PROUDLY MANUFACTURED BY TUTHILL

HEAVY DUTY SERIES

ENGINEERING DATA PACK

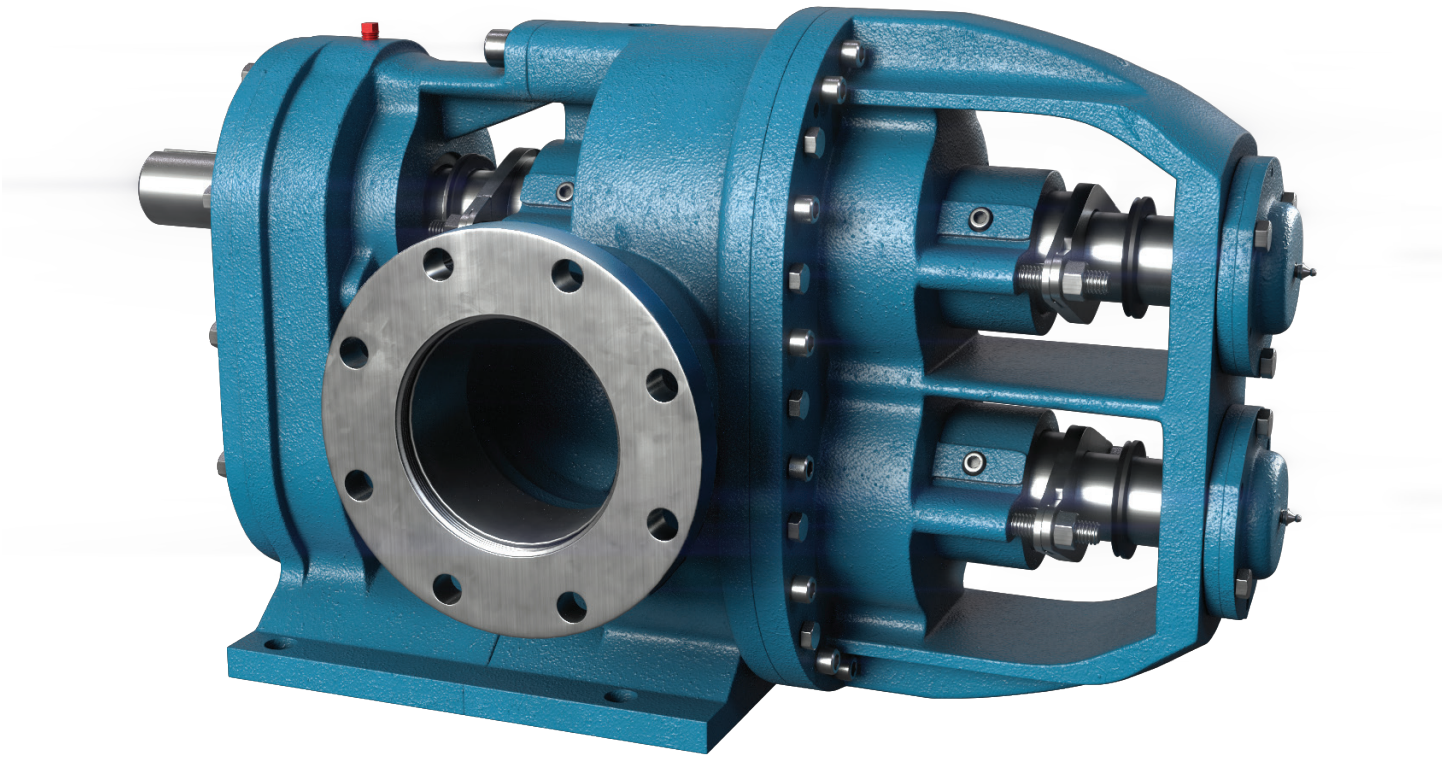

MADE IN USA

Tuthill

TABLE OF CONTENTS

Heavy Duty Model Number System 3
70A Pump Mounting Dimensions 4
70A Pump Mounting Dimensions with Flanged Ports 4
Flanged Port Dimensions 4
120A Pump Mounting Dimensions 5
120A Pump Mounting Dimensions with Flanged Ports 5
330 Pump Mounting Dimensions 6
330 Pump Mounting Dimensions with Flanged Ports 6
600 Pump Mounting Dimensions 7
600 Pump Mounting Dimensions with Flanged Ports 7
Temperature Limits 8
Materials of Construction 9
Seal Chamber Dimensions 10
NPSHr Data 11
Priming Ability 12
Abrasives & Slurries 13
Spherical Particle Size Data 13
Nozzle Loading Data 14
Model Steam Jacket 14
Flange Ratings (Cast Iron) 15
Flange Ratings (Stainless Steel) 15
Regulatory Compliance Information. 16

Tuthill

HEAVY DUTY MODEL NUMBER SYSTEM

	PUMP SERIES		PUMP SIZE			MATERIALS OF CONSTRUCTION	PORT POSITION & ORIENTATION	LOBE DESIGN	SEALING METHOD	SEAL TYPE	SEAL FLUSH	PORT TYPE	INTERFERENCE FIT GEARS	SHAFT BUSHINGS	SHAFT MATERIAL	TUTRIDING	JACKETS	CLEARANCE
	H	D	3	3	0	I	A	1	M	E	1	A	0	A	A	0	0	0
POSITION #	1	2	3	4	5	6	7	8	9	10	11	12	13	14	15	16	17	18

POS. 1 & 2 - PUMP SERIES

HD = Unmounted Pump

POS. 3, 4, & 5 - PUMP SIZE

70A = 3" Suction, 2" Discharge
120 = 4" Suction, 3" Discharge
330 = 5" Suction, 4" Discharge
600 = 6" Suction, 6" Discharge

POS. 6 - MATERIALS OF CONSTRUCTION

I = Ductile Iron (DI)
S = Stainless Steel (316 SS)

POS. 7 - PORT POSITION & ROTATION

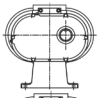
A = Right Hand Drive

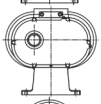
B = Left Hand Drive

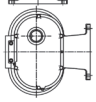
C = Right Side Mount, Right Hand Drive

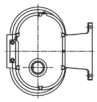
D = Right Side Mount, Left Hand Drive

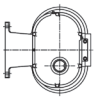
E = Left Side Mount, Right Hand Drive

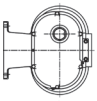
F = Left Side Mount, Left Hand Drive

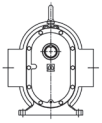
G = 600 Mount

POS. 8 - LOBE DESIGN

1 = Single Lobe
2 = Double Lobe*
* Hot clearance standard

POS. 9 - SEALING METHOD*

P = Packing
M = Mechanical Seals
C = Cartridge Mechanical Seals
* Four seals per pump

POS. 10 - SEAL TYPE

A = Type 1 Standard Packing
C = Type 2 Packing with Lantern Ring
D = Pure PTFE Packing with Lantern Ring
E = Pure PTFE Packing (Food Grade)
F = Type 42 Triple Lip Seal
H = Type 9T Mechanical Seal
L = Type 5610 Cartridge Seal
W = Wedgee Packing

POS. 11 - SEAL FLUSH

0 = None
1 = CW Vent to Seal Chamber*
2 = CCW Vent to Seal Chamber*
* API Plan 13

POS. 12 - PORT TYPE

A = NPT

Steel Material Flange Options
B = 125/150# Flat Face Flanged Ports
C = 125/150# Raised Face Flanged Ports
D = 300# Raised Face Flanged Ports

SS Material Flange Options
E = 150# Flat Face Flanged Ports
F = 150# Raised Face Flanged Ports
G = 300# Raised Face Flanged Ports

POS. 13 - INTERFERENCE FIT GEARS*

0 = Standard Gears in Gearcase
1 = IF Gears in Gearcase
* Gear fit determined by application duty point

POS. 14 - SHAFT BUSHINGS

A = Bronze (330 DI Only)
B = DU (70A/120A/600 DI Only)
C = Carbon
E = High-Temp Carbon
G = Tungsten Carbide

POS. 15 - SHAFT MATERIAL

A = High-Strength Armco, Standard
B = Chrome Oxide Coated

POS. 16 - TUTRIDING

0 = None
1 = Tutrided Housing, Faceplate, & Impellers

POS. 17 - JACKETS

0 = None
1 = Pump Jacket

POS. 18 - CLEARANCES

0 = Standard (Temp ≤ 150°F)
A = Hot (Temp 150°F - 350°F)
D = Standard - Black Liquor Soap (Temp ≤ 185°F)
E = Hot with High-Temp Mods (Temp > 350°F)*

* Includes bearings, lip seals, & grease/oil

70A PUMP MOUNTING DIMENSIONS

All measurements are in inches.

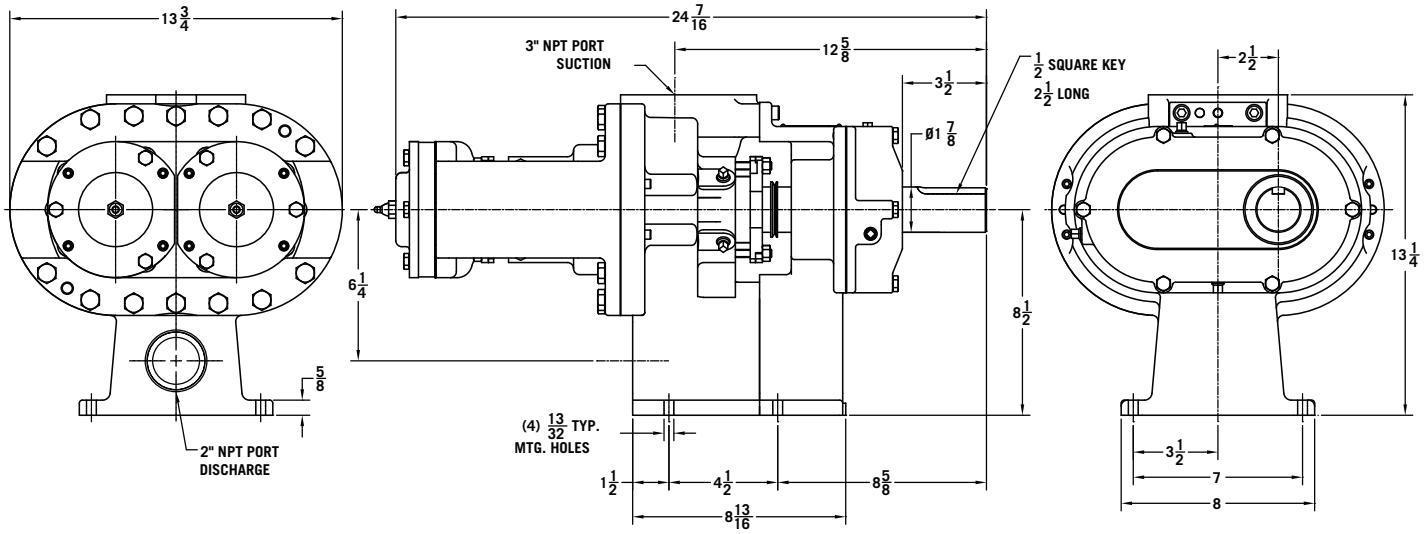

70A PUMP MOUNTING DIMENSIONS WITH FLANGED PORTS

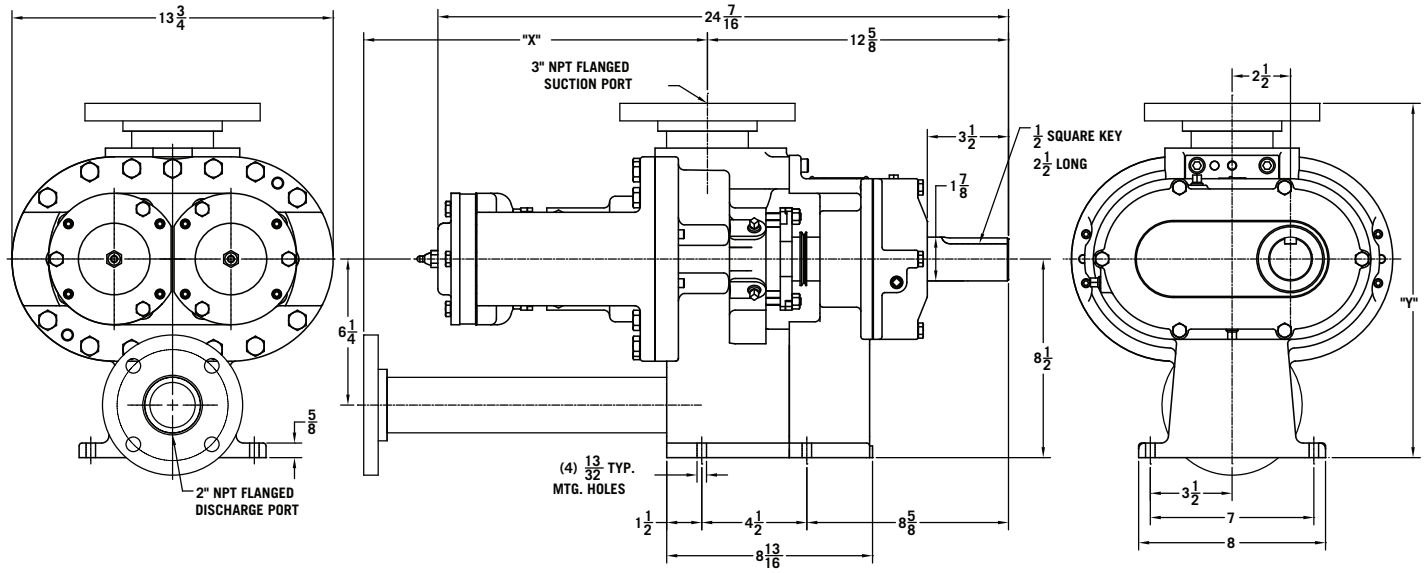

FLANGED PORT DIMENSIONS

PORT DIMENSIONS		
FLANGES	**X**	**Y**
150# FF	14-23/32"	15-5/32"
150# RF	14-23/32"	15-5/32"
300# RF	15-1/32"	15-21/32"

NOTE: In conjunction with our program of continuous testing and design upgrading, all specifications are subject to change without notice. All data is approximate. Request a quotation for your specific application.

120A PUMP MOUNTING DIMENSIONS

All measurements are in inches.

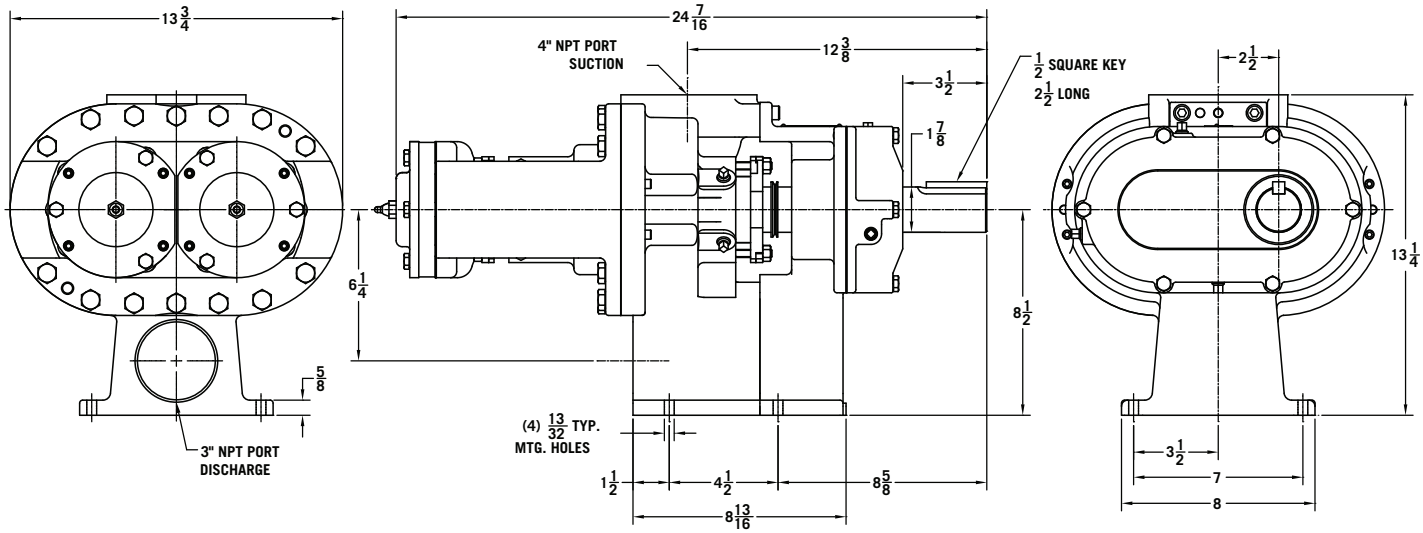

120A PUMP MOUNTING DIMENSIONS WITH FLANGED PORTS

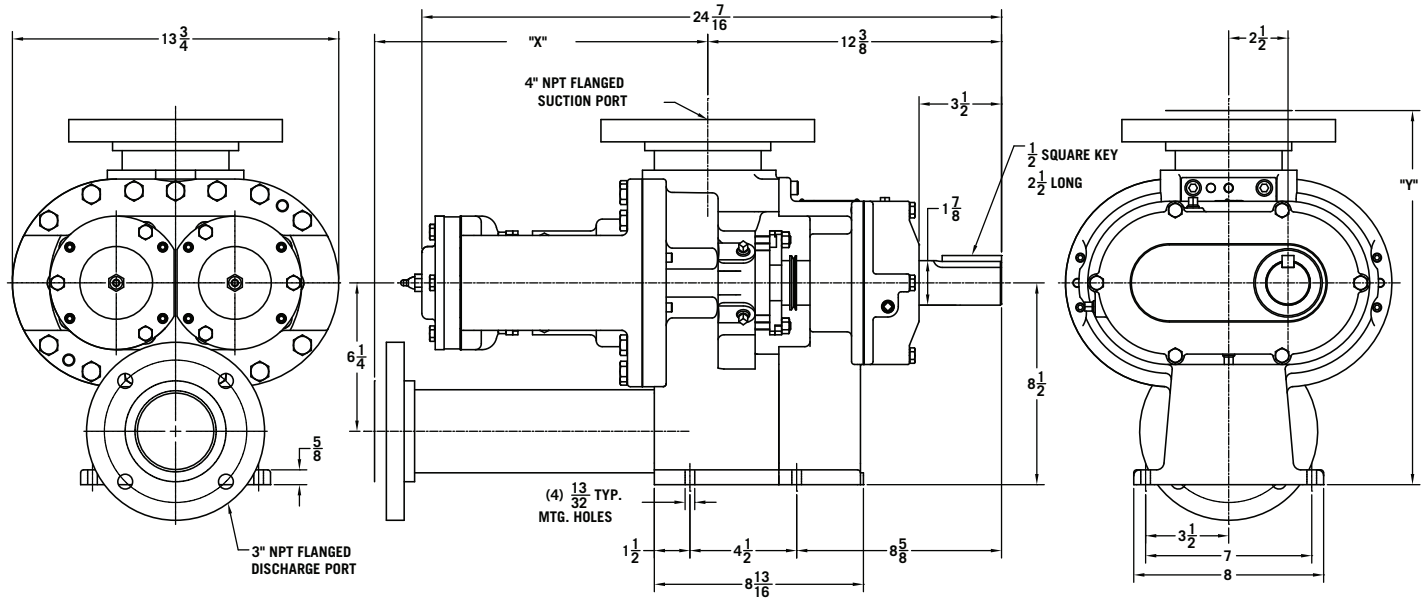

FLANGED PORT DIMENSIONS

PORT DIMENSIONS		
FLANGES	**X**	**Y**
150# FF	13-17/32"	15-3/8"
150# RF	13-17/32"	15-3/8"
300# RF	14-1/32"	15-3/4"

NOTE: In conjunction with our program of continuous testing and design upgrading, all specifications are subject to change without notice. All data is approximate. Request a quotation for your specific application.

330 PUMP MOUNTING DIMENSIONS

All measurements are in inches.

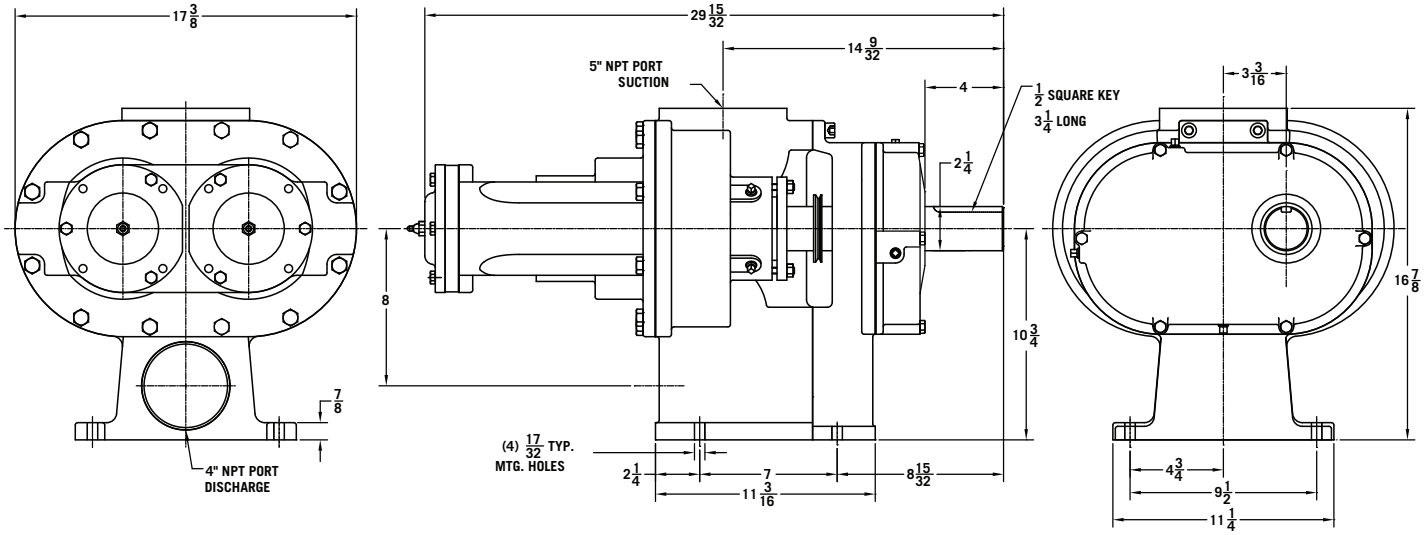

330 PUMP MOUNTING DIMENSIONS WITH FLANGED PORTS

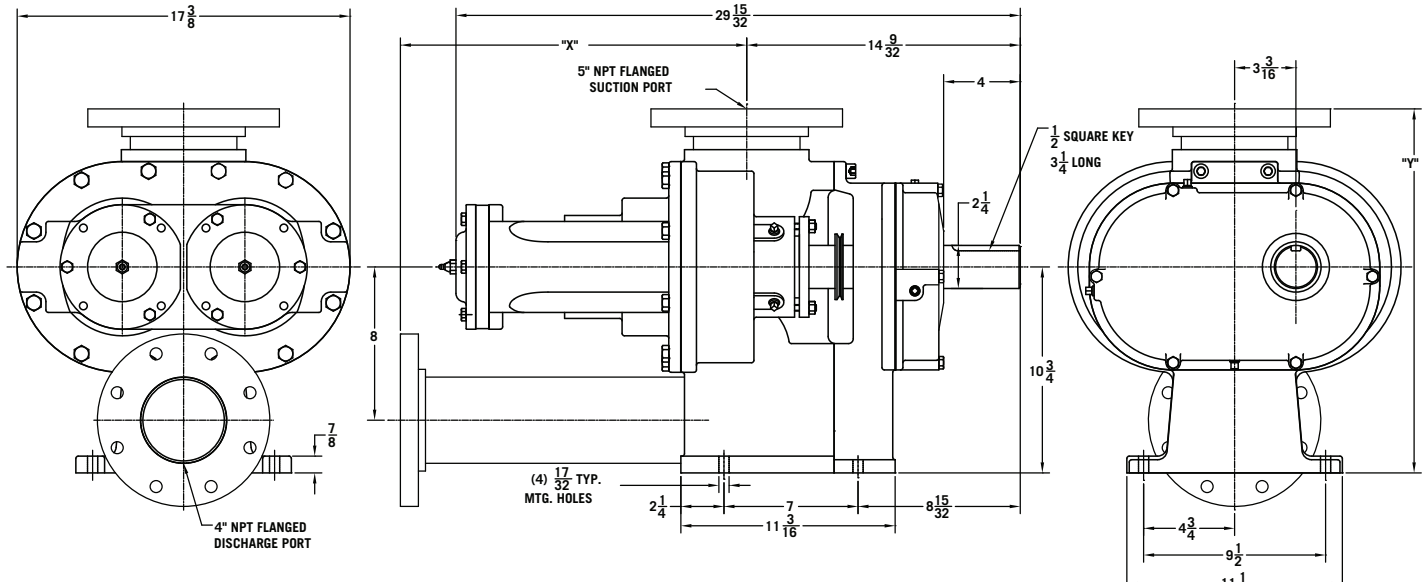

FLANGED PORT DIMENSIONS

PORT DIMENSIONS		
FLANGES	**X**	**Y**
150# FF	18-3/32"	19"
150# RF	18-3/32"	19"
300# RF	18-21/32"	19-9/16"

NOTE: In conjunction with our program of continuous testing and design upgrading, all specifications are subject to change without notice. All data is approximate. Request a quotation for your specific application.

600 PUMP MOUNTING DIMENSIONS

All measurements are in inches.

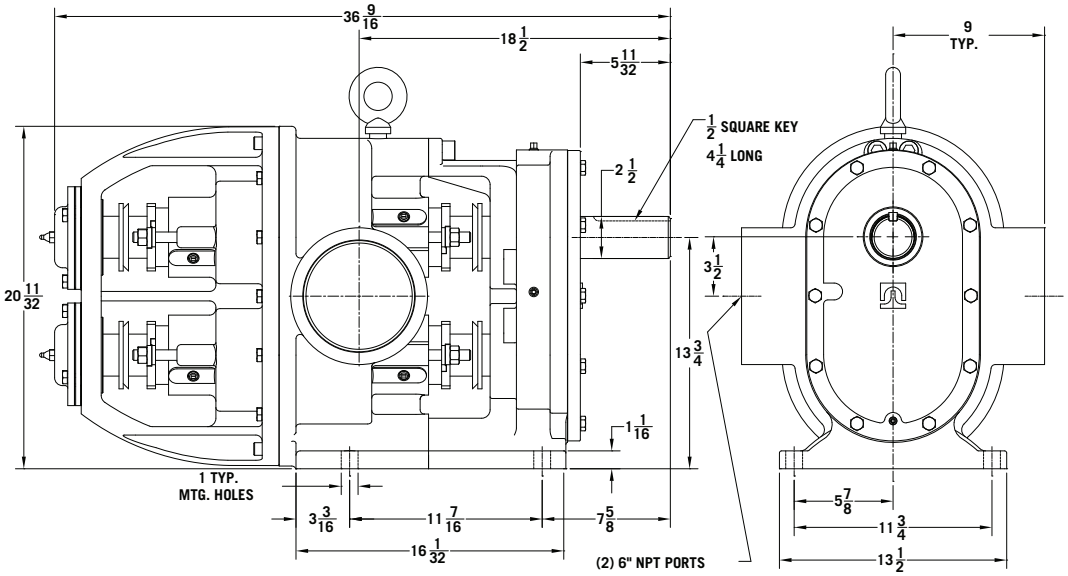

600 PUMP MOUNTING DIMENSIONS WITH FLANGED PORTS

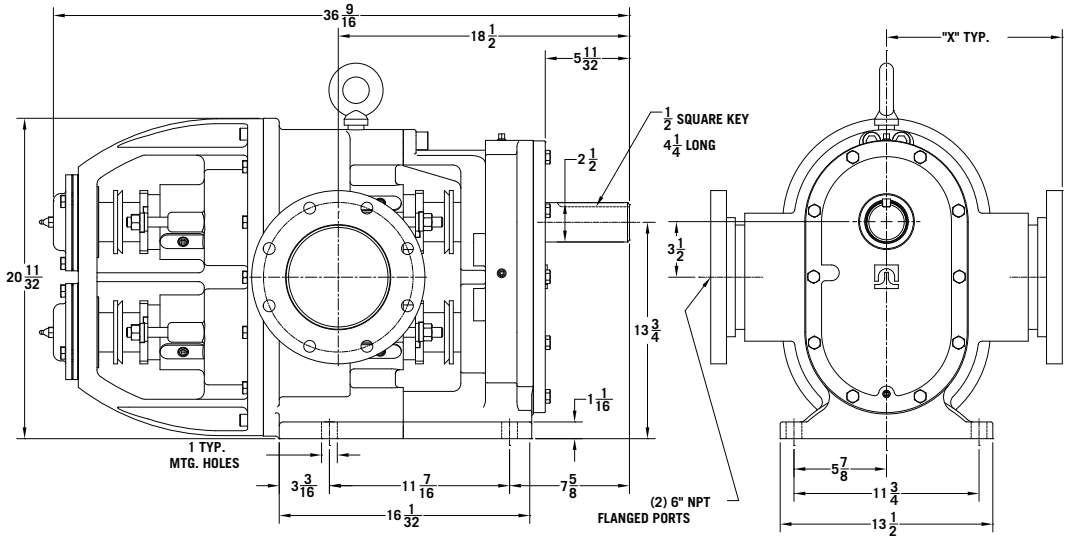

FLANGED PORT DIMENSIONS

PORT DIMENSIONS		
FLANGES	**X**	**X**
150# FF	11-5/32"	11-5/32"
150# RF	11-5/32"	11-5/32"
300# RF	11-21/32"	11-21/32"

NOTE: In conjunction with our program of continuous testing and design upgrading, all specifications are subject to change without notice. All data is approximate. Request a quotation for your specific application.

HEAVY DUTY TEMPERATURE LIMITS

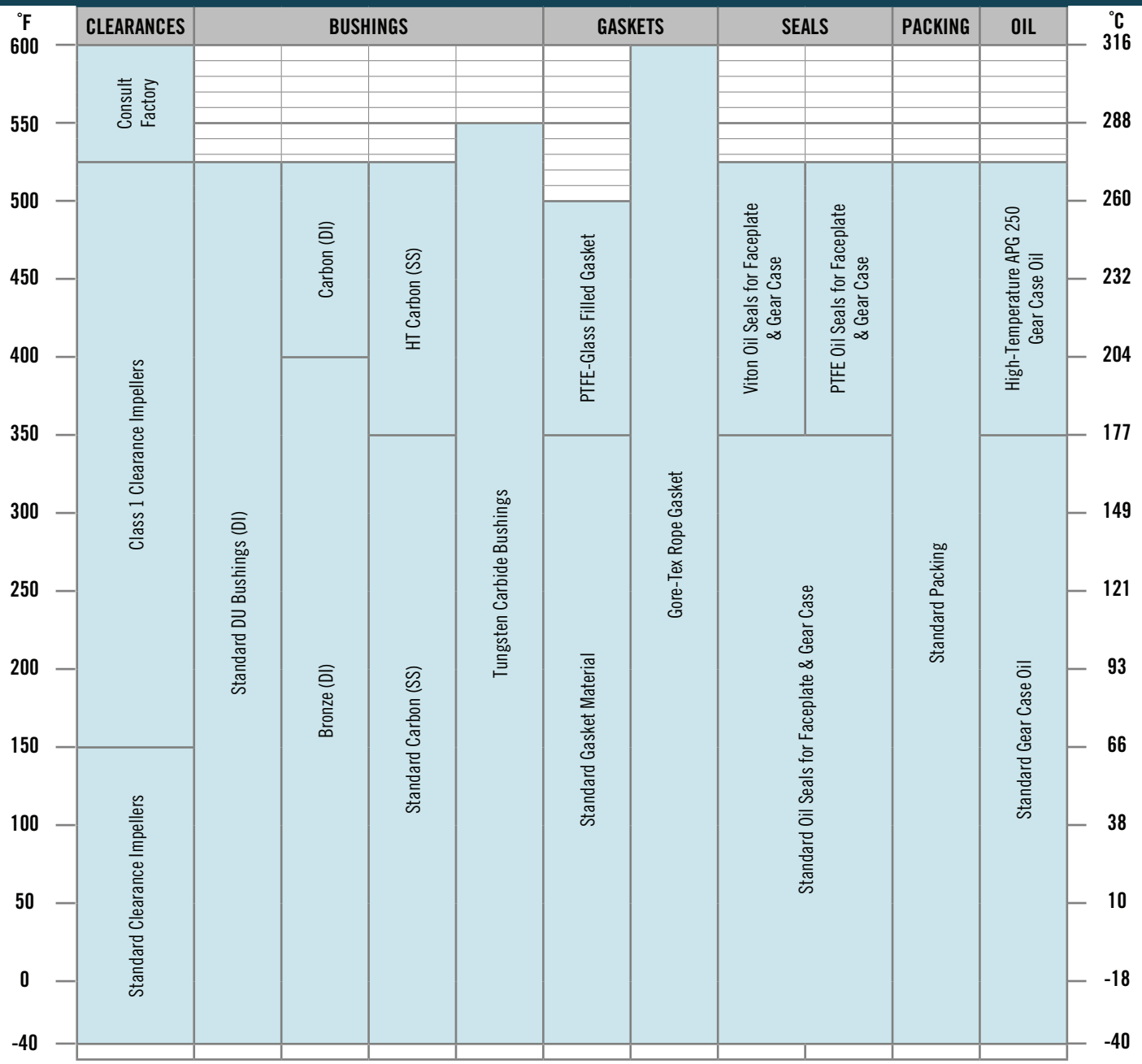

NOTE: Viton and PTFE oil seals can be used in place of standard oil seals upon request. PTFE and Gor-Tex gaskets can be used in place of standard seals upon request. If using a mechanical seal, please consult factory for temperature limitations.

HEAVY DUTY MATERIALS OF CONSTRUCTION

PART NAME	MATERIAL	STANDARD	COMMENTS	AVAILABILITY	
				GGI	GGS
IMPELLER COVER	Ductile Iron	ASTM A536, Grade 80-55-06	187-255 Brinell Hardness	S	
	Stainless Steel	ASTM A743, Grade CF-8M	155-185 Brinell Hardness		S
	Tutrided Ductile Iron	ASTM A536, Grade 80-55-06	Surface Hardened	O	
FACEPLATE	Ductile Iron	ASTM A536, Grade 80-55-06	187-255 Brinell Hardness	S	
	Stainless Steel	ASTM A743, Grade CF-8M	155-185 Brinell Hardness		S
	Tutrided Ductile Iron	ASTM A536, Grade 80-55-06	Surface Hardened	O	
GEARCASE	Cast Iron	ASTM A48		S	S
GEARCASE COVER	Cast Iron	ASTM A48		S	S
IMPELLERS	Ductile Iron	ASTM A536, Grade 80-55-06		S	
	Stainless Steel	ASTM A743, Grade CF-8M	155-185 Brinell Hardness		S
	Tutrided Ductile Iron	ASTM A536, Grade 80-55-06	Surface Hardened	O	
DRIVE & DRIVEN SHAFTS	High-Strength Steel	ASTM A564, Grade 630	Armco 17-4PH	S	S
	CO Coated High-Strength Steel	ASTM A564, Grade 630	Armco 17-4PH Chrome Oxide Coated	O	O
HOUSING BUSHINGS	Carbon	Carbon Graphite Resin			S
	DU Bushing	Steel Backed/PTFE Coated		S	
GEARCASE BALL BEARING	Steel			S	S
FACEPLATE BALL BEARING	Steel			S	S
STEAM JACKET	Aluminum			O	O

DI - Ductile Iron Pumps	SS - Stainless Steel Pumps	S - Standard	O - Optional

SEAL CHAMBER DIMENSIONS

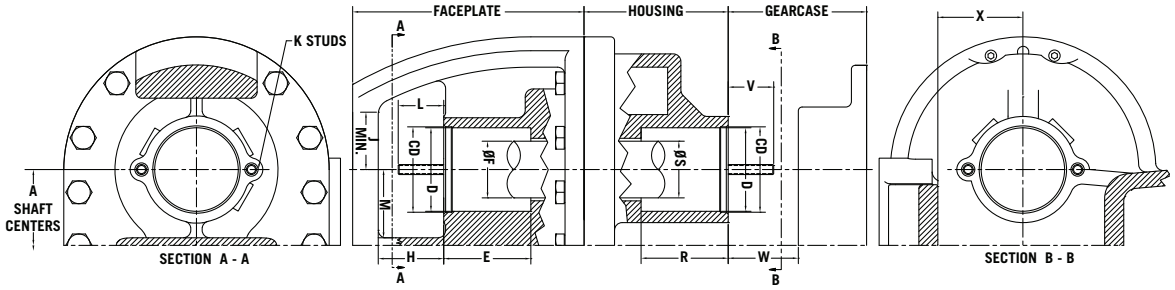

MODEL	"A"	"B"	"D"	"E"	"F"	"H"		"J"		"L"		"M"		"K STUDS"	
						SS	DI	SS	DI	SS	DI	SS	DI	QTY	SIZE
70A	5.0005 / 4.9995	3 5/8	2.758 / 2.752	2 7/8	1.869 / 1.868	2 3/8	2 11/32	2 3/16	2 3/16	1 1/2	1 1/2	2 15/64	2 1/4	8	3/8 - 16
120A	5.0005 / 4.9995	3 5/8	2.758 / 2.752	2 7/8	1.869 / 1.868	2 3/8	2 11/32	2 3/16	2 3/16	1 1/2	1 1/2	2 15/64	2 1/4	8	3/8 - 16
330	6.4005 / 6.3995	4 1/4	3.255 / 3.250	3 5/16	2.244 / 2.243	3 1/8	3 7/32	2 1/2	2 1/2	2	2	2 15/16	2 61/64	8	1/2 - 13
600	7.0005 / 6.9995	6 3/4	3.510 / 3.505	3 1/4	2.494 / 2.493	4 1/16	3 7/8	2 3/4	2 5/8	2 3/16	2 1/16	3 1/4	3 7/32	8	5/8 - 11

MODEL	"R"	"S"	"V"		"W"	"X" MIN
			SS	DI		
70A	2 7/8	1.8745 / 1.8740	1 1/2	1 1/2	2 5/16	3
120A	2 7/8	1.8745 / 1.8740	1 1/2	1 1/2	2 5/16	3
330	3 5/16	2.2488 / 2.2480	2	2	3 1/16	3 5/8
600	3 1/4	2.4988 / 2.4980	2	2	3 3/4	3 1/8

D = Sealing Chamber Bore
E = Sealing Chamber Bore Depth Faceplate
F = Faceplate Shaft Diameter
H = Length to Obstruction, Faceplate Side
J = Length to Obstruction
L = Stud Length Faceplate
M = Length to Obstruction
K = Stud Information
R = Sealing Chamber Depth Housing
S = Shaft Diameter Housing
V = Stud Length
W = Length to Nearest Obstruction

NOTE: In conjunction with our program of continuous testing and design upgrading, all specifications are subject to change without notice. All data is approximate. Request a quotation for your specific application.

NPSHr DATA

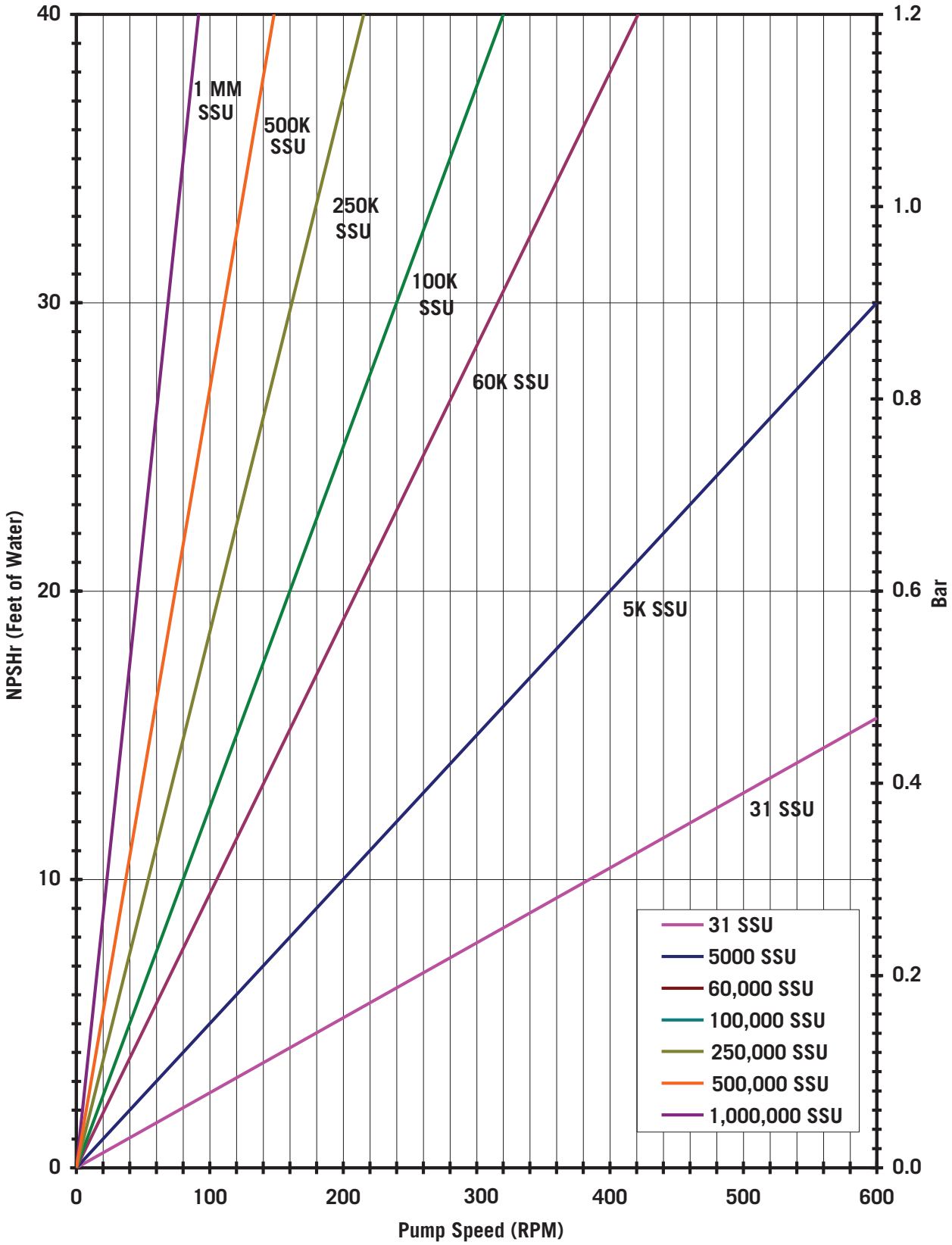
40
30
20
10
0
1.2
1.0
0.8
0.6
0.4
0.2
0.0
Bar
NPSHr (Feet of Water)
0
100
200
300
400
500
600
Pump Speed (RPM)
1 MM SSU
500K SSU
250K SSU
100K SSU
60K SSU
5K SSU
31 SSU
31 SSU
5000 SSU
60,000 SSU
100,000 SSU
250,000 SSU
500,000 SSU
1,000,000 SSU

PRIMING ABILITY

Performance curves indicating priming ability of pumps is based on test data obtained on new pumps. Priming ability of older pumps, because of larger clearances, will not be as accurate.

DUCTILE IRON (STD. CLEARANCE)

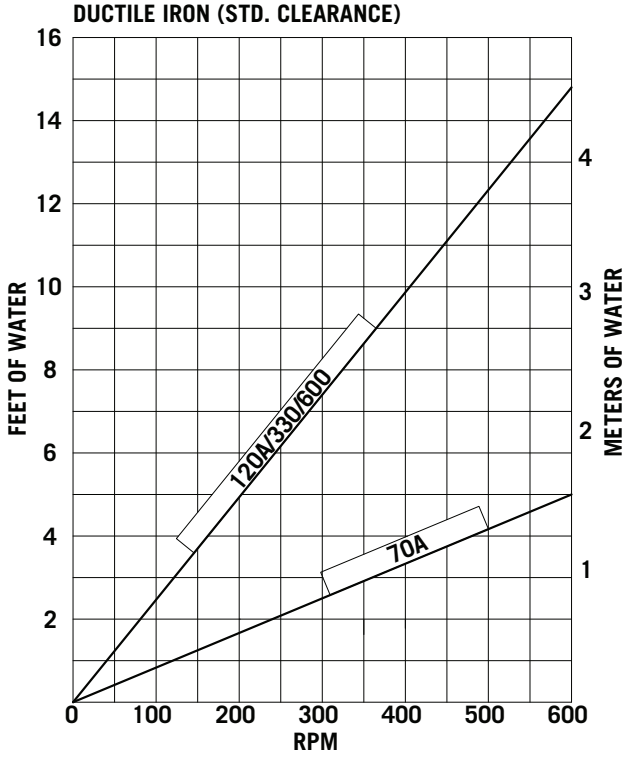

DUCTILE IRON (HOT CLEARANCE)
STAINLESS STEEL (STD. CLEARANCE)

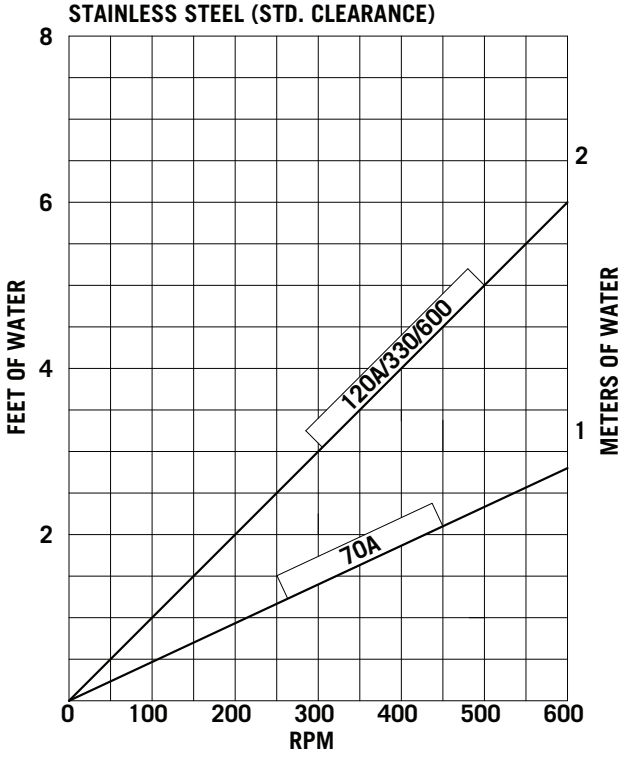

STAINLESS STEEL (HOT CLEARANCE)

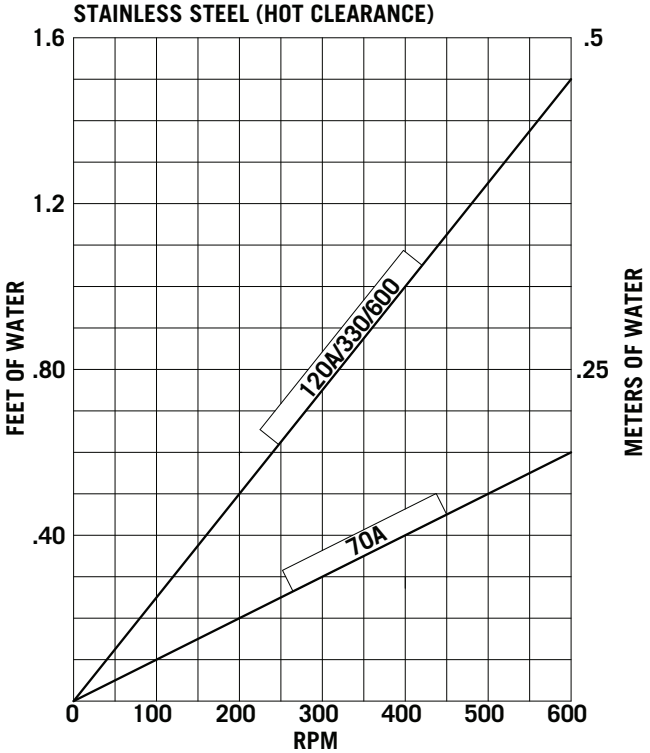

ABRASIVES & SLURRIES

The Heavy Duty process pumps are ideally suited for slurries as it is capable of handling a wide range of apparent viscosities and solid particle sizes. When sizing a process pump, you must determine the viscosity of the carrier fluid, particle size, and particle hardness.

The thicker the carrier fluid, the less recirculation of product through the fluid chamber clearances (slip), thus there is less erosive wear from any abrasive particle. If the carrier fluid is water thin, the abrasive particles are allowed to recirculate in the clearances, resulting in short wear life.

Particle size and hardness both affect the wear life of a process pump. Each process pump model has different clearance dimensions. If the particle is harder than the pump material construction and larger than the clearance dimension, the pump will generally have initial wear equal to that of the particle size and level off to a slower, constant wear rate. If the particle size is smaller than the pump clearances, the wear is less of a problem. A particle is therefore defined as abrasive if it is equal to or harder than the pump construction and larger than the factory set clearances in a new pump.

Knowing that the process pump has been successfully applied on abrasive slurries, we generally do not recommend pump speeds on inorganic slurries to be any greater than 190 RPM. Try to maintain the slowest possible speeds for any abrasive slurry. Wear life is relative; the Heavy Duty process pump will always do better than a gear or vane pump at identical operating speeds.

Maximum Recommended Pump Speeds For Existing Applications	
Waste solvents, oils, paints, etc.	230 RPM
Municipal sludge/scum	190 RPM
Animal rendering	100 RPM
Asphalt with filler	100 RPM
Magnetic oxide slurries	150 RPM
Grain slurries (mash)	150 RPM
Clay coating slurries	280 RPM
Clay slip & ceramic slurries	50 RPM
Coal oil surface	190 RPM

SPHERICAL PARTICLE SIZE DATA

The chart at right shows the theoretical maximum and recommended maximum particle size that a pump will pass. This is strictly a function of geometry. Pumps will last longer if abrasive particles are smaller than internal pump clearances and softer than the internal pump parts. On slurries with maximum diameter particles, a maximum speed of 100 RPM is recommended to minimize crushing. Particles must be able to be sheared by pump impellers or the pump will stall.

Pump Model	Theoretical Maximum Diameter	Recommended Maximum Diameter
70A	1.25" [31.75mm]	0.75" [19.05mm]
120A	1.50" [38.10mm]	0.875" [22.23mm]
330	2.25" [57.15mm]	1.00" [25.40mm]
600	3.00" [76.20mm]	1.25" [31.75mm]

NOZZLE LOADING DATA

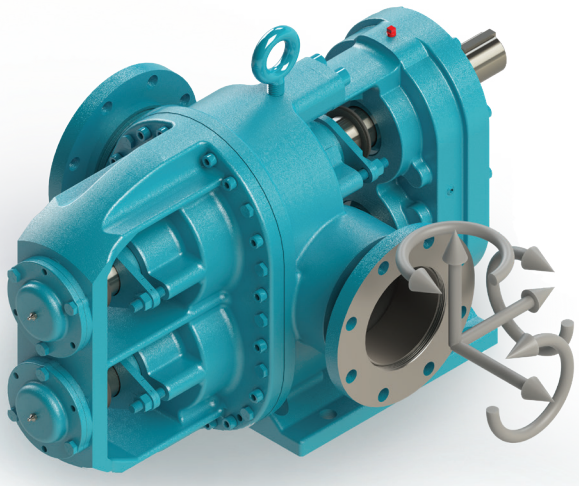

HEAVY DUTY NOZZLE LOADING DATA					
PUMP SIZE	PORT SIZE	MAXIMUM FX, FY, & FZ		MAXIMUM MX, MY, & MZ	
	Inch	Lbs	N	Lbs-in	N-m
HD70A	2	150	667	2275	257
	3	200	890	2750	311
HD120A	3	200	890	2750	311
	4	250	1112	3150	356
HD330	4	250	1112	3150	356
	5	300	1334	3600	407
HD600	6	500	2224	4100	463

STEAM JACKET

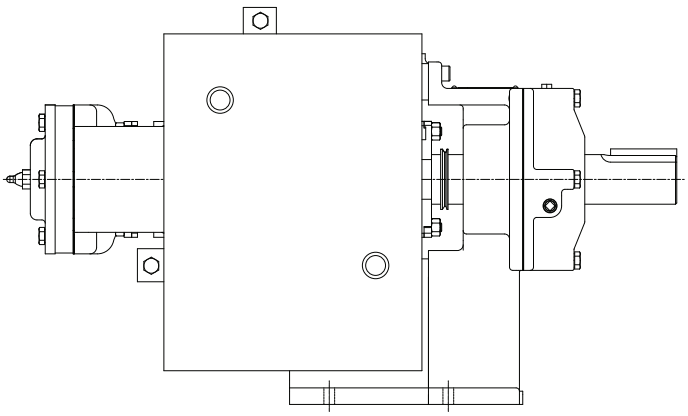

CONSTRUCTION

The jacket has a fabricated, carbon steel, plate-type insert with an aluminum cast outer shell. The jacket is made in two-piece construction for field installation and/or pump maintenance access. Each half has 1/2" NPT (internal) in and out ports.

Rating:

- Steam or heat transfer fluids
- 150 PSI maximum pressure
- 500°F maximum temperature

NOTE: In conjunction with our program of continuous testing and design upgrading, all specifications are subject to change without notice. All data is approximate. Request a quotation for your specific application.

HEAVY DUTY FLANGE RATINGS (ASME CAST STAINLESS STEEL)

Heavy Duty Flange Pressure-Temperature Ratings (Stainless Steel CF-8M)

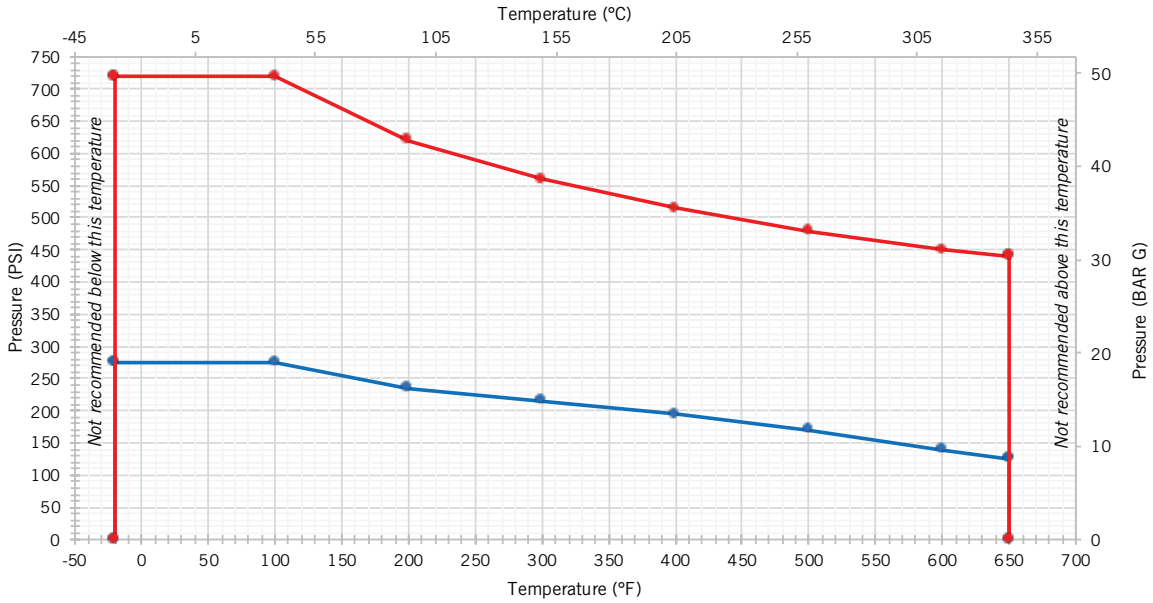

HEAVY DUTY FLANGE RATINGS (ASME CAST STEEL)

Heavy Duty Flange Pressure-Temperature Ratings (Steel ASTM A216 WCB)

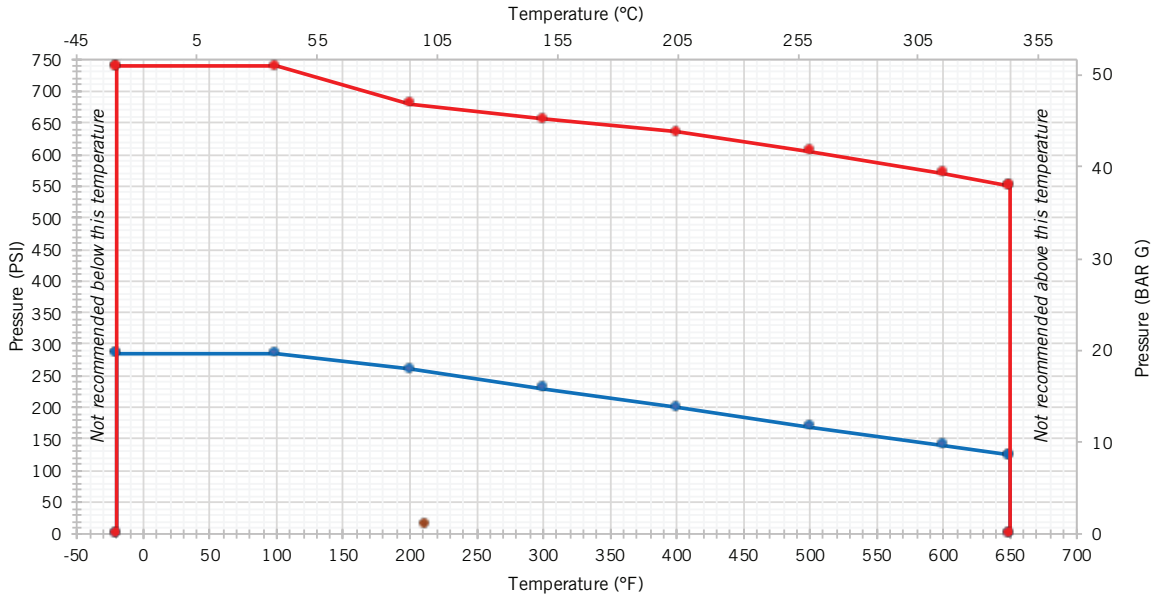

NOTE: These charts show ratings for the flanges only. The maximum pump operating conditions must be considered. Consult the appropriate catalog for the maximum allowable pressure and temperatures. These ratings are non-shock pressure.

WARNING

RAPID TEMPERATURE CHANGE CAN RESULT IN FLANGE FAILURE AND LEAKAGE WHICH CAN CAUSE PROPERTY DAMAGE OR SERIOUS INJURY. DO NOT EXCEED CAST IRON TENSILE STRENGTH WHEN BOLTING FLANGES.

REGULATORY COMPLIANCE INFORMATION

ATEX

The Heavy Duty Series pumps' technical file is lodged in accordance with Article 13(1)(b)(ii)of ATEX Directive 2014/34/EU of 26 February 2014

THE FOLLOWING STANDARDS WERE USED TO VERIFY CONFORMANCE:

2006/42/EC – The Machinery Directive

EN 1127-1:2011 – Explosive atmospheres - Explosion prevention and protection - Part 1: Basic concepts and methodology

EN ISO 80079-36:2016 – Explosive atmospheres - Part 36: Non-electrical equipment for explosive atmospheres - Basic method and requirements

EN ISO 80079-37:2016 – Explosive atmospheres - Part 37: Non-electrical equipment for explosive atmospheres - Nonelectrical type of protection constructional safety "c", control of ignition sources "b", liquid immersion "k"

CE

The Heavy Duty Series pumps comply with the European Directive 2006/42/EC

THE FOLLOWING STANDARDS WERE USED TO VERIFY CONFORMANCE:

EN ISO 12100:2010 – Safety of machinery - General principles for design

EN 809:1998+A1:2009 – Pumps and pump units for liquids - Common safety requirements

2011/65/EU – The Restriction of Hazardous Substances Directive

TUTHILL ALSIP

12500 South Pulaski Road
Alsip, Illinois 60803 USA
P: 708.389.2500
Alsip@Tuthill.com

TUTHILL ILKESTON

Birkdale Close
Manners Industrial Estate
Ilkeston, Derbyshire DE7 8YA UK
P: 44.0.115.932.5226
Ilkeston@Tuthill.com

MADE IN USA