ALBIN PUMP KB-SERIES

Peristaltic Metering Pump / Technical Data Sheet



FEATURES

- *Tool-free tube change*
- *Improved safety - No rotating parts during tube change*
- *Easy-to-Use interface with one-button switching between local and remote mode*
- *USBC interface allows for downloading of operating history and installation of new software versions*
- *Expandable platform can be field-upgraded to add features and communication options*
- *Multiple tubing options to cover a wide range of chemicals and applications*
- *Assembled in USA*
- *Standard 2-year warranty*

OPERATING RANGE

- *Maximum flow up to 600 lph (158.5 gph) at full speed*
- *Up to 8.6 bar (125 psi)*
- *2500:1 Turndown*
- *Up to 30 ft (9 m) suction lift*

Ingersoll Rand

KB-Series
Data Sheet

MODEL CODE EXPLANATION

Sample Part Number: KB2-4-ACG1-1

KB X X X X X X

Series
KB

Frame
2 - Size 2
3 - Size 3
4 - Size 4

Power Cord
4 - US 115V
5 - US 230V
6 - EU
8 - Australia / New Zealand
9 - UK

Connector
A - 1/2" NPT / BSPT (KB2 and KB3 include 3/8" tube compression fitting)

Tube Material
A - XL Extended Life
B - CR Chemical Resistant
C - PT Petro-Tough

Tube Detail - ID [in] and Count
Various Diameters

Control Levels
1 - SCADA: Speed control: 4-20 mA i/o
Three contact inputs
Four configurable relay outputs
Frequency
2 - Advanced: Modbus TCP

NOTICE: All possible options are shown in the chart, however, certain combinations may not be recommended. Consult a representative or the factory if you have questions concerning availability.

KB-Series
Data Sheet

TUBE ASSEMBLY CODE EXPLANATION

A A D 1

Connector Type
A - 1/2" NPT / BSPT
(KB2 and KB3 include 3/8" tube compression fitting)

Tube Material Information
A - XL Extended Life
B - CR Chemical Resistant
C - PT Petro-Tough

No. of tubes
1- Single
2 - Double

Tube Diameter
D - 0.075"
E - 0.093" / 0.125"
G - 0.187"
H - 0.25"
K - 0.375"
L - 0.50"
P - 0.75"

AVAILABLE TUBE ASSEMBLIES

	MATERIAL	PART #	GPH	L/H	PSI	BAR
KB2	XL	AAD1	1.7	6.5	125	8.6
		AAE2	4.4	16.8	110	7.6
		AAG2	17.1	65.1	110	7.6
	CR	ABH1	14.2	54	50	3.4
	PT	ACG1	9.3	35.2	65	4.5
		ACG2	14.9	56.7	65	4.5

	MATERIAL	PART #	GPH	L/H	PSI	BAR
KB3	XL	AAD1	2.1	7.9	125	8.6
		AAE2	4.7	18	125	8.6
		AAG2	18.9	72	110	7.6
		AAK1	33.2	126	125	8.6
		AAKL	33.2	126	30	2.1
	CR	ABK1	28.4	108	50	3.4
	PT	ACG1	10.1	38.4	65	4.5
		ACG2	18.2	69	65	4.5
		ACK1	28.4	108	65	4.5

	MATERIAL	PART #	GPH	L/H	PSI	BAR
KB4	XL	AAH1	28.4	108	125	8.6
		AAH2	53.7	204	100	6.9
		AAL1	99.5	378	50	3.4
		AAP1	158.5	600	30	2.1
	CR	ABK1	53.7	204	30	2.1
		ABK2	125.5	477	30	2.1
	PT	ACH1	39.5	150	65	4.5
		ACK1	55.3	210	65	4.5
		ACK2	99.5	378	65	4.5

Flow rates shown are at maximum pump speed. For best tube life, select a large tube and run the pump slowly.

TUBE MATERIAL INFORMATION

Albin XL - Extended Life tubing has excellent acid and alkali resistance, and is compatible with numerous oxidizing agents such as sodium hypochlorite. Albin XL is best for fatigue life and is the longest-lasting tube in compatible applications. Min/max temperature: 0-80°C (32-176°F).

Albin CR - Chemical Resistant is suited for handling strong acids and bases, and is virtually unaffected by most commercial sanitizers & cleaners. Min/max temperature: 0-54°C (32-130°F).

Albin PT - Petro-Tough can be used with fats and oils, lubricants, and some solvents. Min/max temperature: 0-54°C (32-130°F).

KB-Series

Data Sheet

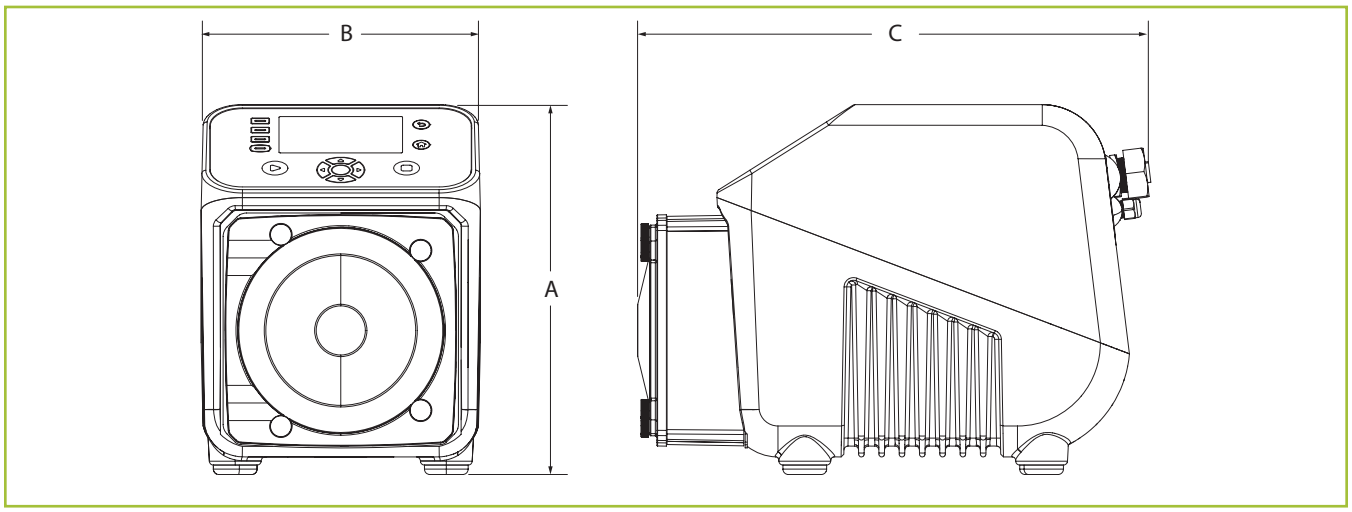

DIMENSIONS

mm (Inch)

DIMENSION	KB2	KB3	KB4
A	246 (10.4)	246 (10.4)	363 (14.3)
B	206 (8.125)	206 (8.125)	308 (12.125)
C	361 (14.2)	361 (14.2)	455 (17.9)
Weight kg (lb)	16.1 (35.6)	16.1 (35.6)	32.6 (72)

MATERIALS OF CONSTRUCTION

MATERIALS OF CONSTRUCTION	
ENCLOSURE	POWDER COATED ALUMINUM
PUMP HEAD	PBT THERMOPLASTIC
COVER	POLYCARBONATE
ROTOR	PBT THERMOPLASTIC
ROLLERS	NYLON
ROLLER BEARINGS	316SS
ROLLER SHAFT	316SS
MOTOR SHAFT	CHROME STEEL
COVER SCREWS	PLASTIC/316SS
TUBE CONNECTORS	PVDF

About Ingersoll Rand Inc.

Ingersoll Rand Inc. (NYSE:IR), driven by an entrepreneurial spirit and ownership mindset, is dedicated to helping make life better for our employees, customers and communities. Customers lean on us for our technology-driven excellence in mission-critical flow creation and industrial solutions across 40+ respected brands where our products and services excel in the most complex and harsh conditions. Our employees develop customers for life through their daily commitment to expertise, productivity and efficiency. For more information, visit www.IRCO.com.

We are committed to using environmentally conscious print practices

©2024 Ingersoll Rand

KSD-0922-001-EN 0624