For more information, please call 877-742-2878 or
visit www.burtprocess.com

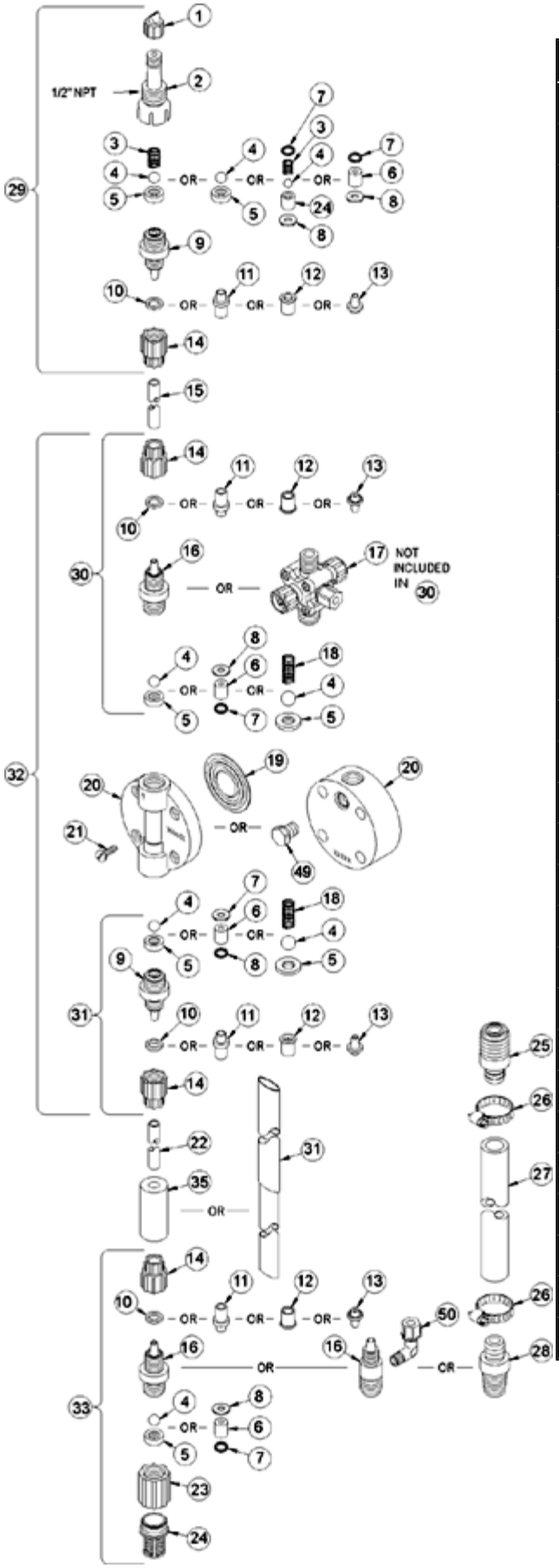

LE-490BI

Key #	Part #	Description	Qty
1	27352	FLAPPER VALVE ,SANTOPRENE	1
2	37351	FITTING, LIQUIPRO, PVDF	1
3	37341	SPRING, COMPRESSION	1
4	10338	BALL, .375 CERAMIC	1
6	36307	CARTRIDGE ASM, .375 PVDF/POLYPREL	3
7	36103	O-RING,POLYPREL	4
8	36107	WASHER, CARTRIDGE VALVE	4
14	10299	COUPLING NUT, PP 3/8	4
16	37765	FITTING,3/8 TUBING PVC	3
17	38004	VALVE ASM, A/S BLEED,3/8' PVC	1
19	30917	LIQUIFRAM, 0.9 FLUOROFILM	0
20	36157	HEAD, MACHINED 0.9 ACRYLIC	1
21	10340	SCREW, 10-24 X .75 PH SS	4
23	36204	COUPLING, FOOT VALVE PP	1
24	10123	STRAINER, FOOT VALVE PP	1
29	38026	VALVE ASM, INJ 3/8' PVC	1
31	38019	VALVE ASM, SUC 3/8' PVC,POLYPREL	1
33	38032	VALVE ASM, FOOT 3/8',PVC/POLYPREL	1
34	37340	SEAT, PTFE	1
35	10322	WEIGHT, SUCTION TUBING	1
36	25636-10	TUBING, .250 X .062 PE	1
38	36280	CAP ASM, A/S	1
39	38011	VALVE BODY,4FV/BLEED 3/8 PVC	1
40	25628	NUT, 6-32 HEX SS	4
41	25627	SCREW, 6-32 X 1.25 PH SS	4
42	25631	NUT, RELIEF TUBING	1
43	34876	SCREW, BLEED	1
44	32171	CAP, THREADED RELIEF	1
45	34868	DISK, .490 OD X .20	1
47	32175	O-RING, .234 ID X .139 W	1
48	32176	O-RING, .676 ID X .070 W	1

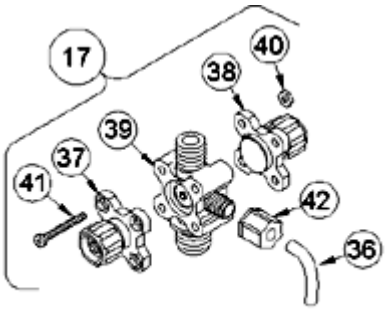

4-FUNCTION VALVE (4FV)

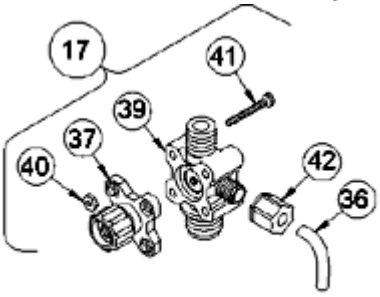

3-FUNCTION VALVE (3FV)

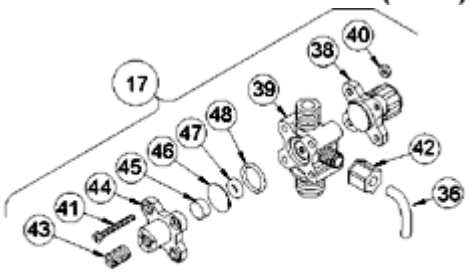

4-FUNCTION BLEED VALVE (B-4FV)

Return to selection page