For more information, please call 877-742-2878 or
visit www.burtprocess.com

Liquid End Sheet

LE-91S / LE-92S / LE-95S

When pumping solutions, make certain that all tubing is securely attached to the fittings. It is recommended that tubing or pipe lines be shielded to prevent possible injury in case of rupture or accidental damage. Always wear protective clothing and face shield when working on or near your metering pump.

Note: See parts list for materials of construction

A. INSTALLING INJECTION CHECK VALVE

1. The purpose of the injection check valve is to prevent backflow from the treated line.
2. A 1/2" NPT female fitting with sufficient depth will accept the injection check valve.
3. To insure correct seating of the ball inside the injection check valve, the injection check valve should be installed upwards (vertically) into bottom of the pipe.

B. CONNECTING DISCHARGE TUBING

NOTE: *Cut tubing to length needed for discharge line.*

1. Route tubing from the injection check valve to the metering pump, making sure it does not touch hot or sharp surfaces, or is bent so sharply that it kinks.
2. Slide the small end of the coupling nut onto tubing, then slide on the clamp ring.
3. Push tubing on the valve housing nozzle so that tubing flares out and butts up against valve housing and will not go any further.
4. Slide the clamp ring and coupling nut to the threads and engage. While pushing the tubing on to the valve housing nozzle, tighten the coupling nut by hand until tubing is held securely in place.

Excessive force will crack or distort fittings.
DO NOT USE PIPE WRENCH.

C. CONNECTING SUCTION TUBING

1. Cut suction tubing to a length so that the foot valve hangs just above the bottom of the solution container. Maximum recommended vertical suction lift is 5 ft (1.5 m).
2. Follow same procedure in connecting suction tubing to suction valve and foot valve (see **B. Connecting Discharge Tubing**).

D. PRIMING

1. Connect pressure relief tubing to pressure relief port on the four function valve.
2. Route tubing to solution reservoir and anchor with a plastic tie. Do not submerge tubing in solution.
3. Start pump. Set at 80% speed and 100% stroke.
4. Pull on Pressure Relief knob (red or black knob), holding knob out until solution is visible through translucent return tubing.
5. The pump is now primed.

NOTE:

(a) Pump is normally self-priming if suction lift is not more than 5 ft (1.5 m), valves in the pump are wet with water (pump is shipped from factory with water in pump head) and the above steps ***(D. Priming)*** *are followed.*

(b) If the pump does not self prime, remove discharge valve housing and ball and pour water or solution slowly into discharge port until head is filled. Follow step ***D. Priming*** *thereafter.*

E. DEPRESSURIZING DISCHARGE LINE

1. It is possible to depressurize the discharge line and pump head without removal of tubing or loosening of fittings.

Be sure injection check valve is properly installed and is operating. If a gate valve or globe has been installed downstream of injection check valve, it should be closed. Be certain relief tubing from the four function valve is connected and run to solution reservoir.

2. Pull on both anti-syphon and relief knobs.
3. The discharge line is now depressurized.
4. If injection check valve is of higher elevation than pump head, disconnecting tubing at injection check valve end will allow air to enter and cause solution to drain back to tank.

LMI
LIQUID METRONICS DIVISION
MILTON ROY
A unit of Sundstrand Corporation

8 Post Office Square
Acton, MA 01720 USA
TEL: (508) 263-9800
FAX: (508) 264-9172
http://www.lmipumps.com

Replaces same of Rev I 12/94
1424.I 1/97

KEY NO.	PART NO.	DESCRIPTION	QUANTITY		
			LE-91S	LE-92S	LE-95S
2	29339	Spring, Polyethylene	1		
	10339*	Spring, PVDF		1	1
3	10338*	Ball, .375" Ceramic	4	4	4
4	10407*	Seal Ring, Teflon	4	4	4
5	10292	Valve Seat, PVC	2	2	
	10392	Valve Seat, Polypropylene			2
6	10299	Coupling Nut, Polypropylene	4	4	4
7	10342-10	Tubing, .375" O.D. Polyethylene	1		
	10342-16	Tubing, .375" O.D. Polyethylene		1	1
8	10293	Valve Housing, PVC	1	1	
	10393	Valve Housing, Polypropylene			1
9	10340	Screw, 10-24 x 3/4" SS	4	4	4
10	30917*	Liquifram®, 0.9 SI, Fluorofilm	1	1	1
11	10113	Head, 0.9 SI, Acrylic	1		
	10213	Head, 0.9 SI, PVC		1	
	10313M	Head, 0.9 SI Polypropylene			1
13	10978	Foot Valve Seat	1	1	1
14	10123	Strainer, Polypropylene	1	1	1
15	10501	Injection Check/Valve Assembly	1		
	25233	Injection Check/Valve Assembly		1	
	25073	Injection Check/Valve Assembly			1
17	25232	Suction Valve Assembly	1	1	
	25075	Suction Valve Assembly			1
18	25234	Foot Valve Assembly	1	1	
	25076	Foot Valve Assembly			1
19	25696	Head Assembly, LE-91S	1		
	25697	Head Assembly, LE-92S		1	
	25832	Head Assembly, LE-95S			1
20	10469-06	Tubing, .375" O.D. Vinyl	1		
21	33050	Anti-Syphon/Pressure Release Valve Asm.	1		
	27048	Anti-Syphon/Pressure Release Valve Asm.		1	
	28022	Anti-Syphon/Pressure Release Valve Asm.			1
22	33024	Pressure Relief Cap Assembly	1		
	28447	Pressure Relief Cap Assembly		1	
	28446	Pressure Relief Cap Assembly			1
23	31138	Anti-Syphon Cap Assembly	1		
	27045	Anti-Syphon Cap Assembly		1	
	25838	Anti-Syphon Cap Assembly			1
24	25627	Screw, 6-32 x 1 1/4" SS	4	4	4
26	27352	Flapper Valve	1	1	
27	10294	Injector Fitting, PVC	1		
	26841	Injector Fitting, PVDF		1	
	10394	Injector Fitting, PPGF			1
35	30425	Valve Body, PVC	1		
	26847	Valve Body, PVDF		1	
	25869	Valve Body, PPGF			1
36	25628	Nut, 6-32 Hex SS	4	4	4
37	25631	Nut, Ferrule	1	1	1
38	25636-10	Tubing, .250" O.D. Polyethylene	1	1	1
39	26136	Clamp Ring	3	3	3
---	32293	Suction Tubing Straightener (not shown)	1	1	1

*Parts included in Spare Parts Kit SP-U1

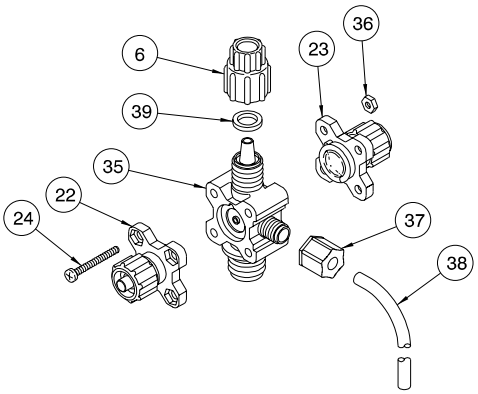

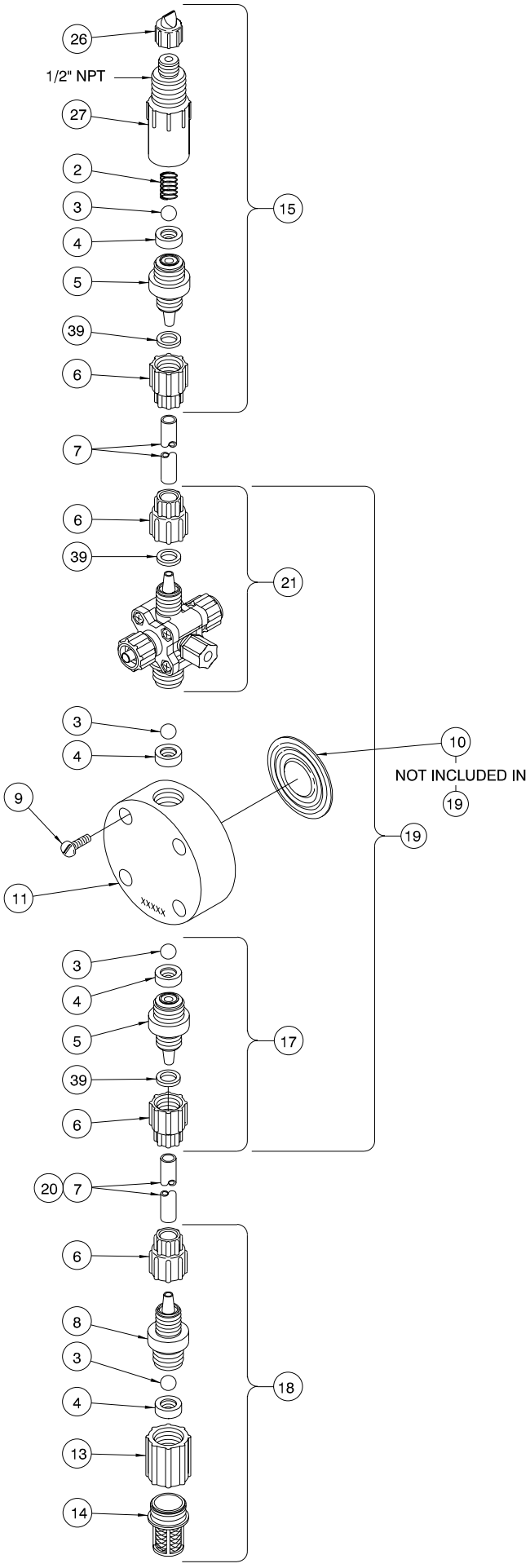

Note:
Threaded connections into pump head are 3/4" - 16 straight threads. **DO NOT USE TEFLON TAPE.** These joints are sealed by seal ring valve seats (Item 4 on exploded view).

LMI
LIQUID METRONICS DIVISION
MILTON ROY
A unit of Sundstrand Corporation

8 Post Office Square
Acton, MA 01720 USA
TEL: (508) 263-9800
FAX: (508) 264-9172
http://www.lmipumps.com

© 1997 LMI Milton Roy - All Rights Reserved
Printed in USA
Specifications subject to change without notice.