JUSTICE SERIES - LJ10H

Progressive Cavity Hopper Pump

CALL TOLL FREE 877-742-2878
FOR SALES AND SUPPORT

Return to BurtProcess.com

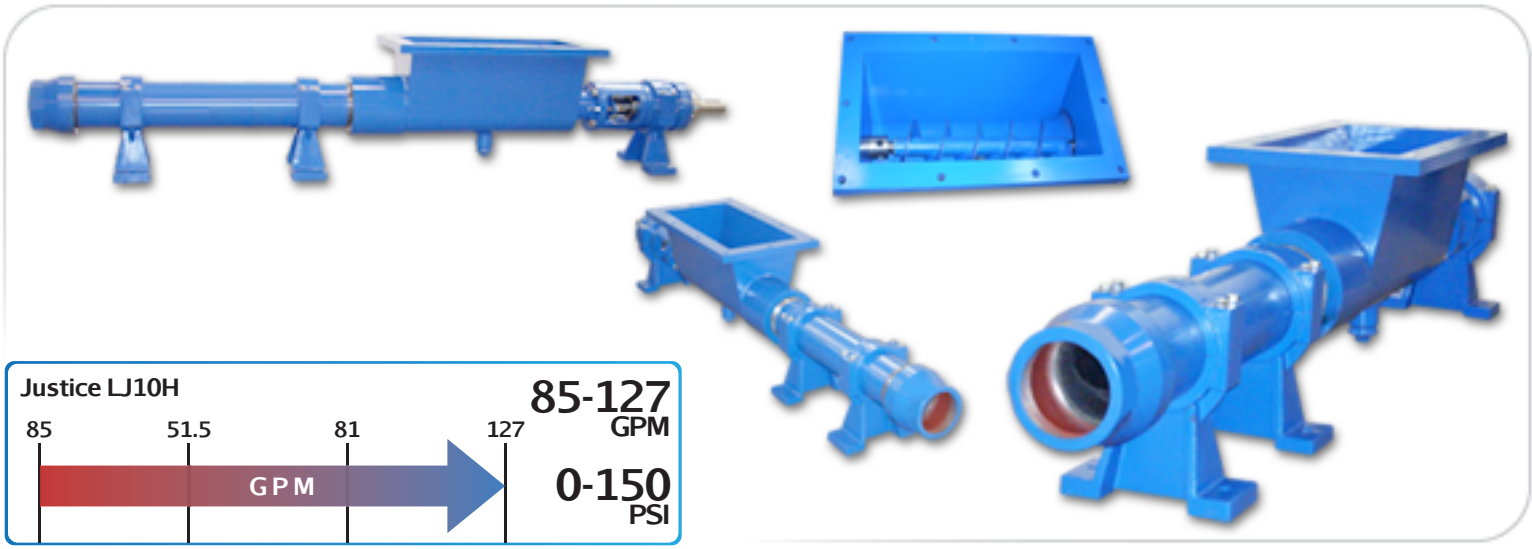

Features

- Large Hopper
- Welded Auger
- Hardened Joints
- Packing or Mechanical Seal
- 3-Stage Options
- Steel or Stainless Steel

Materials

Rotor: *Tool or Stainless Steel - Chrome-Plated*

Stator: *Buna, Rubber, Viton™, EPDM*

Motor: *7.5, 10, 15, and 20 hp*

Inlet: *26" x 12"*

Outlet: *5"*

Bases: *Steel and Stainless Steel*

Curves

Click Links Below

1-Stage **1LJ10H**

2-Stage **2LJ10H**

Drawings

Click Links Below

1-Stage **1LJ10H**

2-Stage **2LJ10H**

Pump Description

The Liberty Justice LJ10H Series Open Hopper Progressive Cavity Pump represents an ideal pumping solution for viscous solutions with high solids contents such as filter press feeding in the industrial wastewater industry. Flow rates of 27.7 GPM/ per 100 Revolutions (85 GPM to 127 GPM) at 0-150 PSI are standard through the range of the series. The Justice Series offers a design of a heavy-duty auger mated to a rotor and stator for the most difficult pumping applications available today.

The large rectangular feed hopper design easily accommodates your pumping medium while the non-pulsating design of the product produces a low-shear flow that conveys your medium along effortlessly. Solids in suspension of up to 50% are accommodated by the Auger design.

The modular design of the LJ10H Justice Series Open Hopper Progressive Cavity pump is a hardened pinned-joint drive assembly with a body available in steel or 316 stainless steel and internal wetted components in either stainless steel or hardened tool steel with hard chrome plating for long-life and durability in abrasive pumping applications.

Rotors and Stators for the LJ10H Justice Series are available in 1, 2, and 3 stages for applications with 75, 150, and 225 PSI discharge pressures with stators available in Buna Nitrile, Viton, EPDM and Natural Rubber. The standard seal design is a set of packing with a lantern ring and flush connections. Mechanical Seal options are readily available.

Contact a Liberty Process representative today for more information about the Justice Series

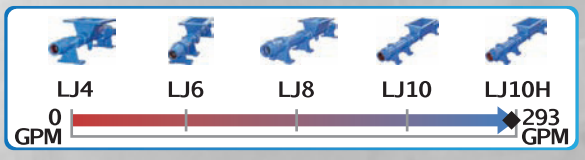

P: 847.640.7867 F: 847.640.7855
2525 Clearbrook Drive Arlington Heights, IL 60005

JUSTICE SERIES - ILJ10H

Progressive Cavity Pump

Performance Curves

RPM	100	200	300	400	500	600	700
NPSH REQ'D	1.1	2.1	3.2	4.7	7.4	9.9	12.6
MIN. HP	1	2	3	5	5	7-1/2	7-1/2

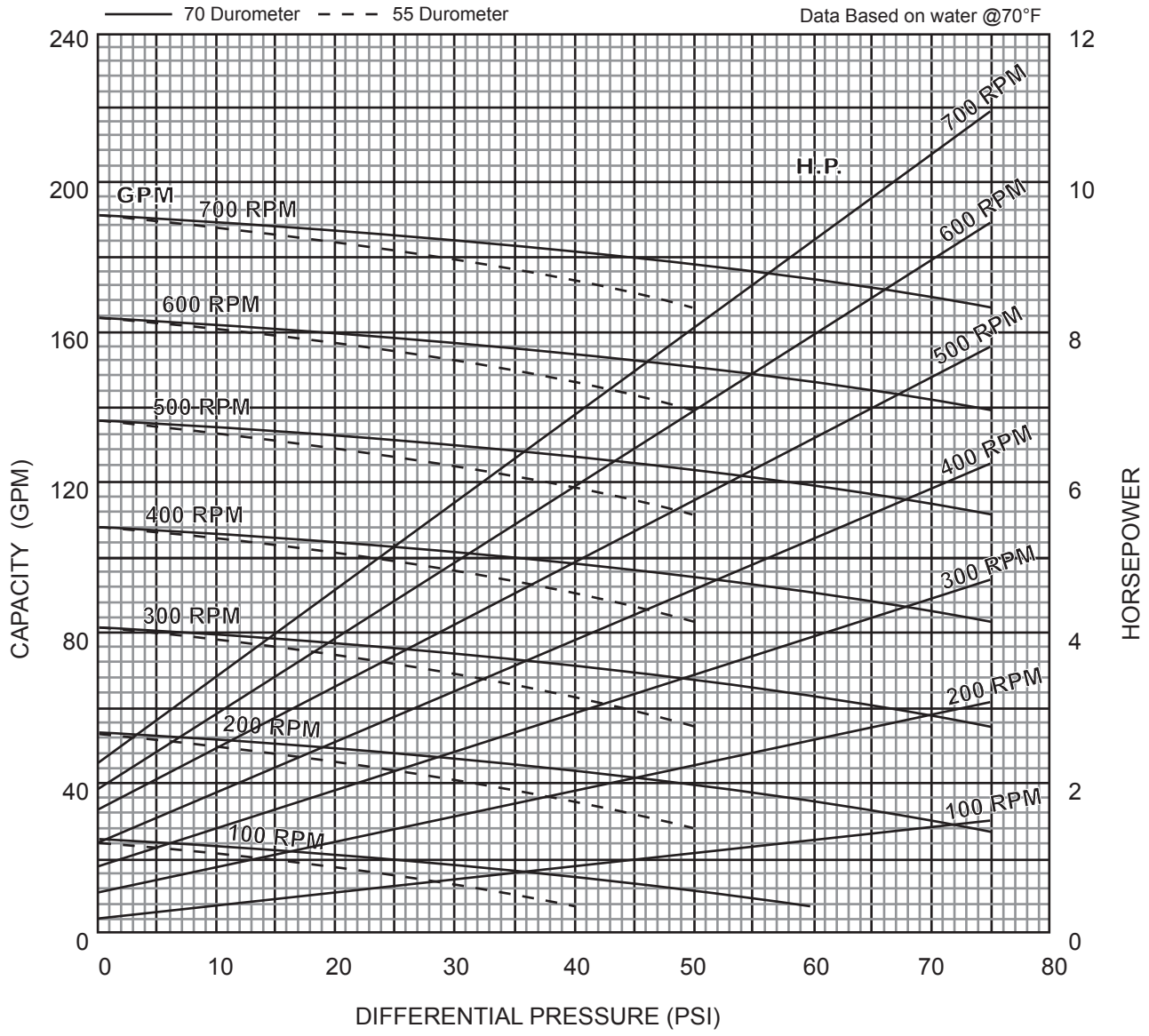

1 Stage Pump

BACK TO TOP

P: 847.640.7867 F: 847.640.7855
2525 Clearbrook Drive Arlington Heights, IL 60005
www.libertyprocess.com

JUSTICE SERIES - 2LJ10H

Progressive Cavity Pump

Performance Curves

RPM	100	200	300	400	500	600	700
NPSH REQ'D	1.1	2.1	3.2	4.7	7.4	9.9	12.6
MIN. HP	2	5	5	7-1/2	10	10	15

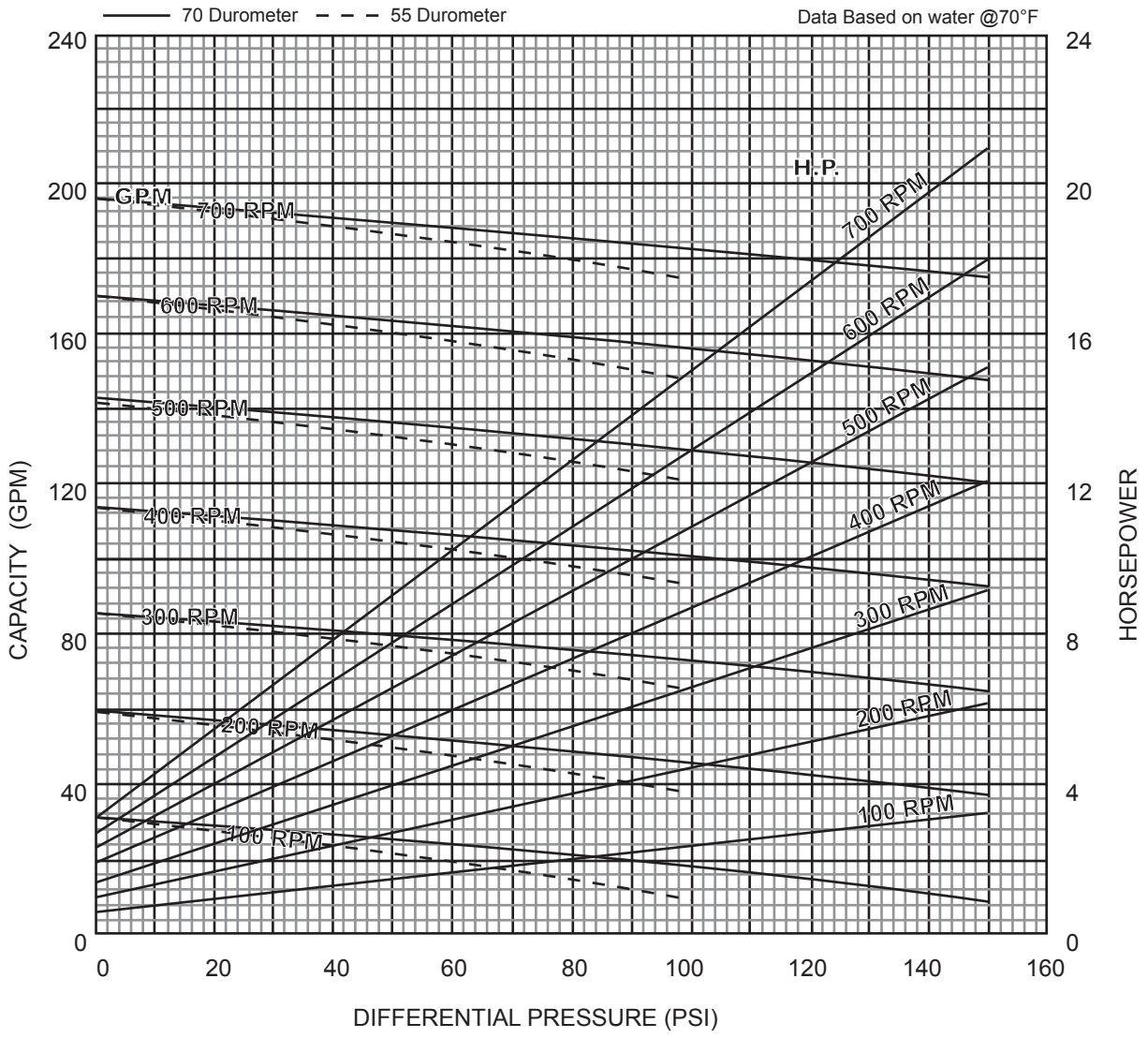

2 Stage Pump

BACK TO TOP

P: 847.640.7867 F: 847.640.7855
2525 Clearbrook Drive Arlington Heights, IL 60005
www.libertyprocess.com

JUSTICE SERIES - ILJ10H

Progressive Cavity Pump

Dimensional Drawings

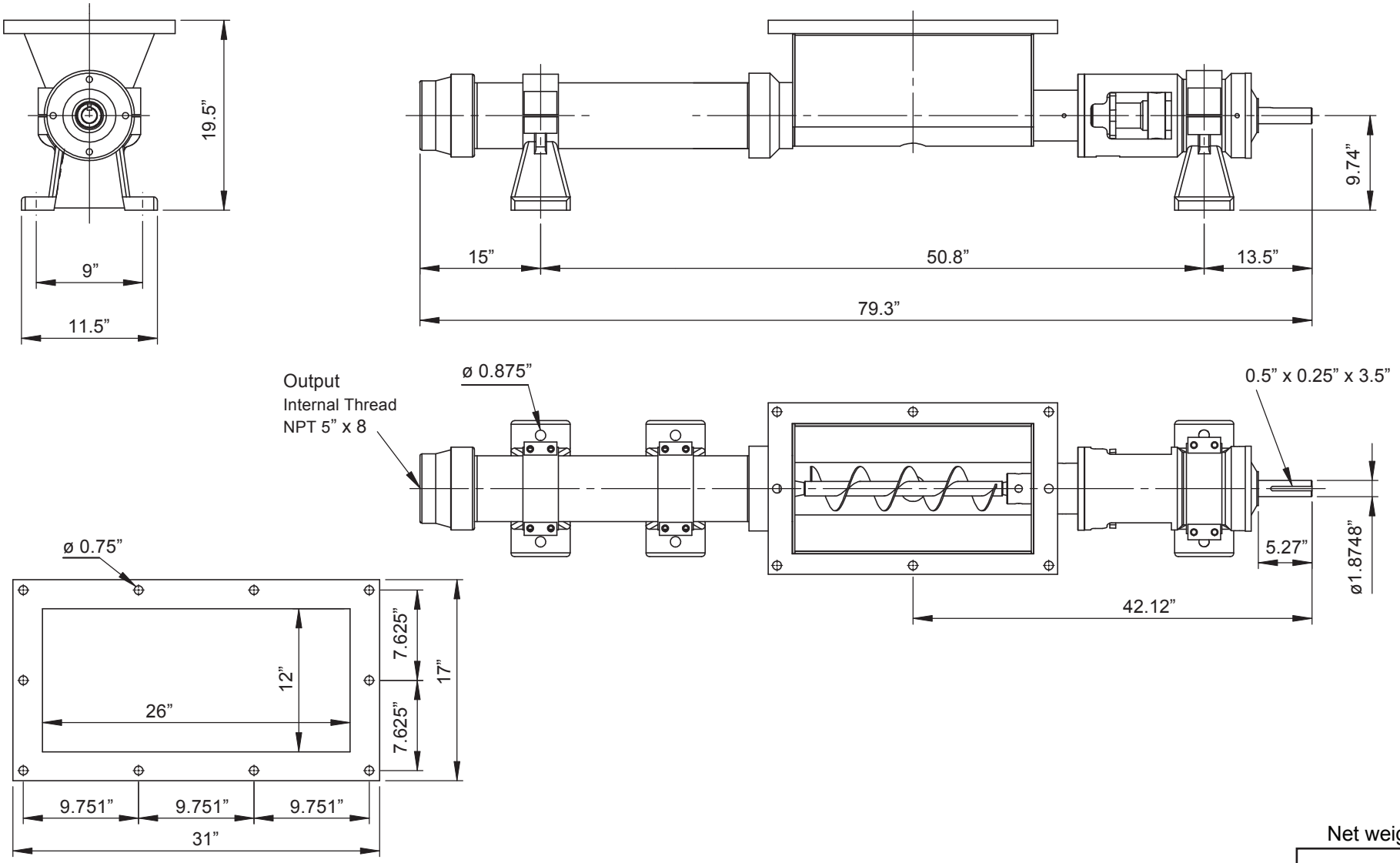

Net weight

≈ lbs.

ALL DIMN: Inches

-

BACK TO TOP

1 Stage Pump

P: 847.640.7867 F: 847.640.7855

2525 Clearbrook Drive Arlington Heights, IL 60005

www.libertyprocess.com

JUSTICE SERIES - 2LJ10H

Progressive Cavity Pump

Dimensional Drawings

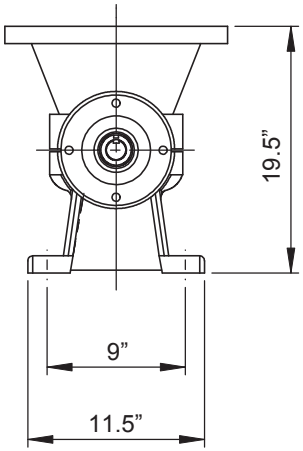

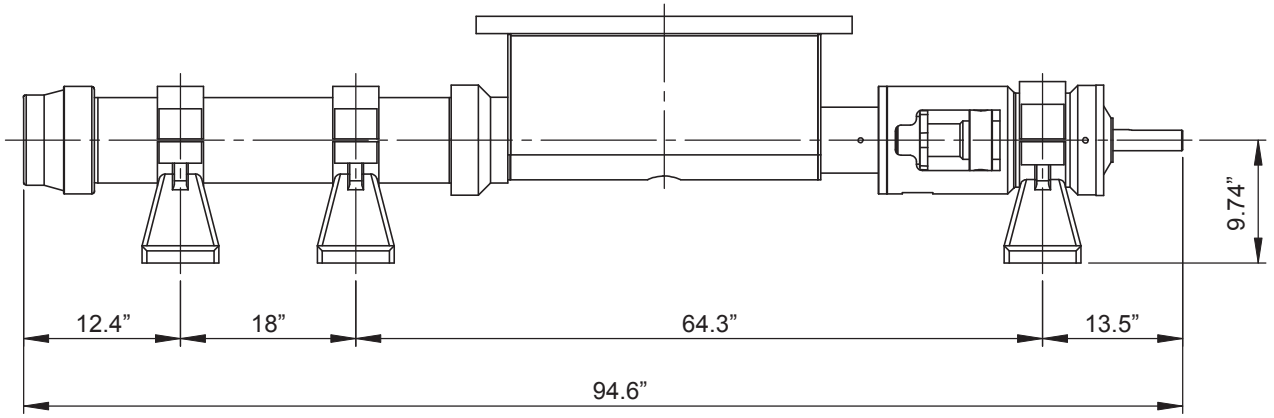

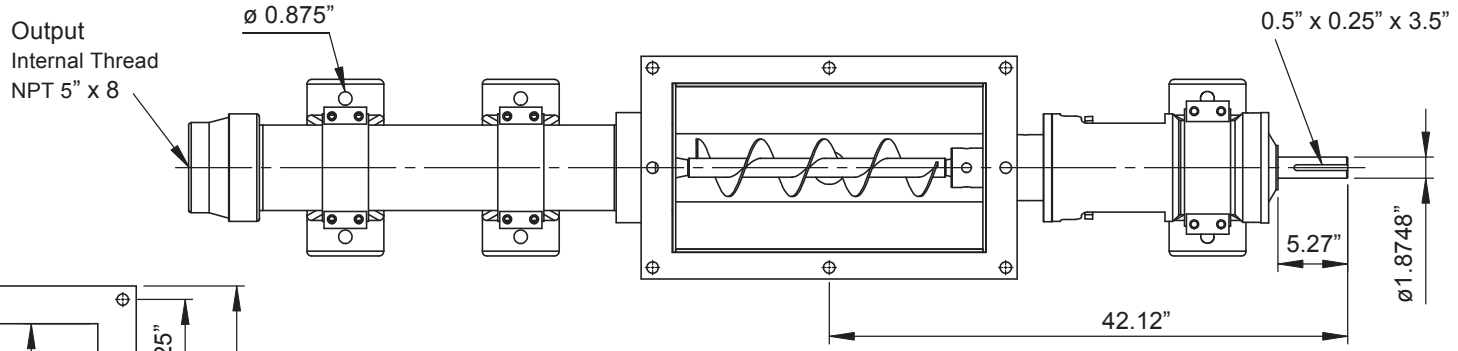

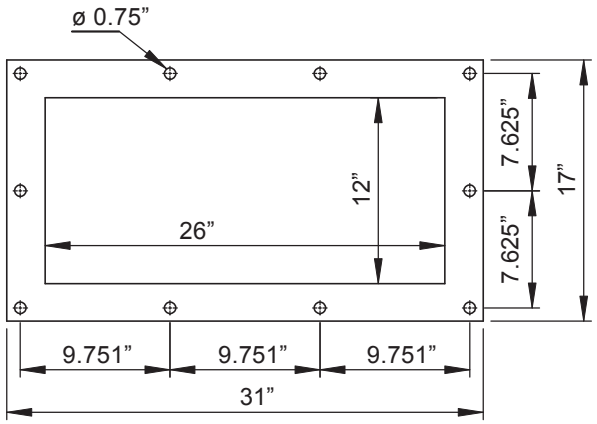

J10 Style

Net weight

≈ lbs.

ALL DIMN: Inches

BACK TO TOP

2 Stage Pump

P: 847.640.7867 F: 847.640.7855
2525 Clearbrook Drive Arlington Heights, IL 60005
www.libertyprocess.com