LIBERTY SERIES - LL12H

Progressive Cavity Pump

CALL TOLL FREE 877-742-2878
FOR SALES AND SUPPORT
Return to BurtProcess.com

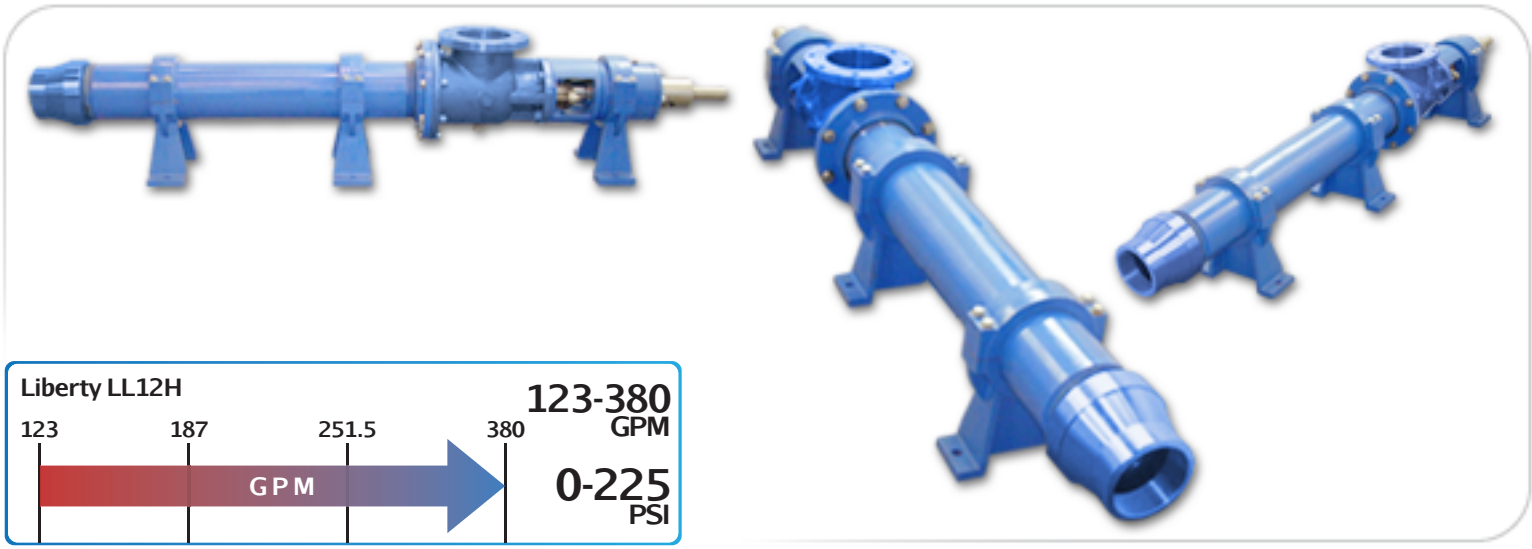

Features

- Modular Design
- Maintenance Free
- Easy Assembly/Disassembly
- Simple Pin Joint Design
- Non-Pulsating Low Shear
- NPT Discharge Connection

Materials

Rotor: *Tool Steel & Stainless Steel, Chrome-Plated*

Stator: *Buna, Rubber, Viton™, EPDM*

Motor: *3, 5, 7.5, 10, 15, 20, and 25 hp*

Inlet: *8"*

Outlet: *6"*

Bases: *Steel and Stainless Steel*

Curves

Click Links Below

1-Stage **1LL12H**

2-Stage **2LL12H**

Drawings

Click Links Below

1-Stage **1LL12H**

2-Stage **2LL12H**

Pump Description

The Liberty LL12H PC Pump is an ideal industrial-sized progressive cavity pump for abrasive pumping applications and high-viscosity industrial chemical applications like thickened grease, scum and slurries. Flow rate (65 gallons/100 revolutions) 123 up to 380 GPM and represents one of our most popular heavy duty models of Progressive Cavity Pumps for Industry currently carried by Liberty Process.

The Liberty LL12H Series PC Pump is a standard suction flanged pump manufactured with cast iron or 316 stainless steel casings and designed in 1, 2, and 3 stages for 75, 150 and 225 psi discharge pressures. The pump unit is a modular design with simple hardened pinned joint drive assembly. Rotors are typically hardned tool steel or 316 stainless steel with a hard chrome plating for long life in abrasive and erosive applications. All other wetted parts are either carbon steel or 316 stainless steel for added durability.

Stators are available in many elastomer materials such as buna, natural rubber, epdm and viton.The standard seal design is a set of gland packing with Lantern Ring and Flush Connections. Mechanical seal options are readily available.The Liberty unit is a low-cost, maintenance free, dependable drop-in replacement pump which will give you the service you need at a price you can afford.

The Liberty LL12H Progressive Cavity Pump parts are direct aftermarket replacements that work with the Moyno™ L12H Series, Tarby™ TL12H Series and Continental™ CL12H Series.*

Contact a Liberty Process representative today for more information about the LL12H Series.

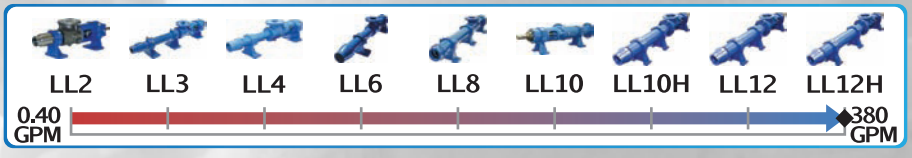

P: 847.640.7867 F: 847.640.7855
2525 Clearbrook Drive Arlington Heights, IL 60005

LIBERTY SERIES - ILL12H

Progressive Cavity Pump

Performance Curves

RPM	100	200	300	400	500	600
NPSH REQ'D	1.2	2.3	3.4	5.6	8.4	11.2
MIN. HP	3	5	5	7-1/2	10	10

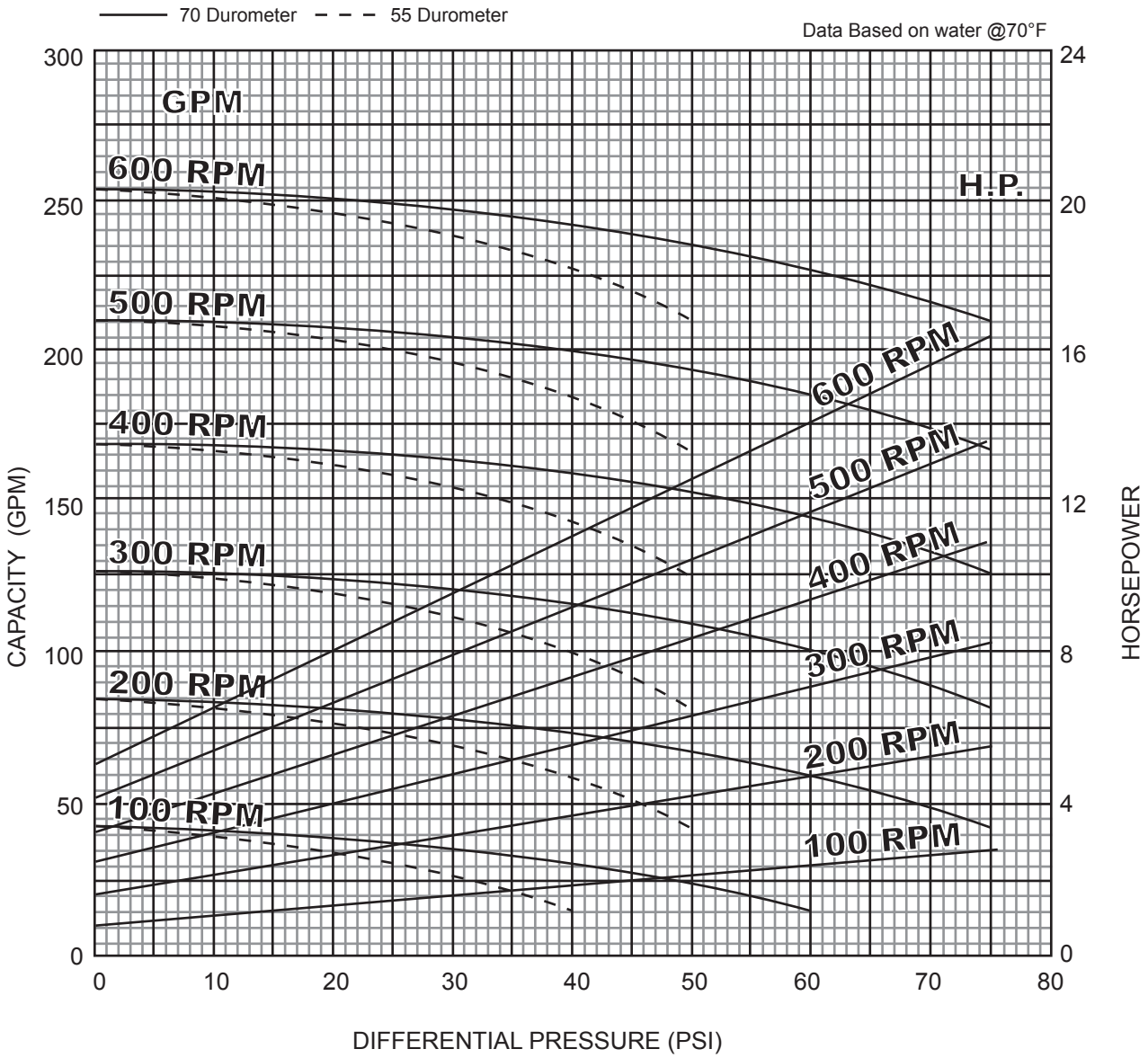

1 Stage Pump

BACK TO TOP

P: 847.640.7867 F: 847.640.7855
2525 Clearbrook Drive Arlington Heights, IL 60005
www.libertyprocess.com

LIBERTY SERIES - 2LL12H

Progressive Cavity Pump

Performance Curves

RPM	100	200	300	400	500	600
NPSH REQ'D	1.4	2.8	4.6	8.1	11.5	15.0
MIN. HP	5	10	15	20	20	25

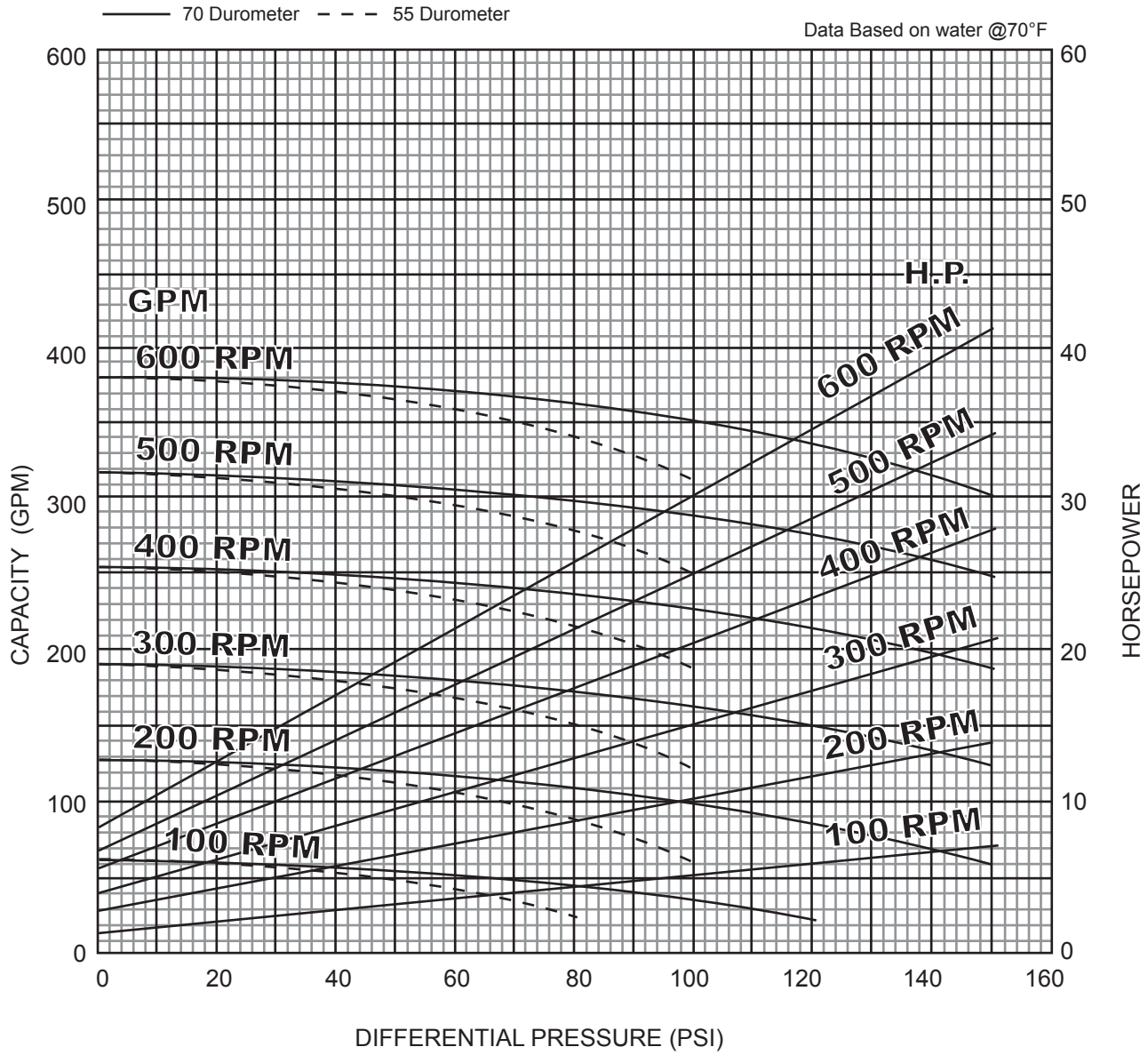

2 Stage Pump

BACK TO TOP

P: 847.640.7867 F: 847.640.7855
2525 Clearbrook Drive Arlington Heights, IL 60005
www.libertyprocess.com

LIBERTY SERIES - ILL12H

Progressive Cavity Pump

Dimensional Drawings

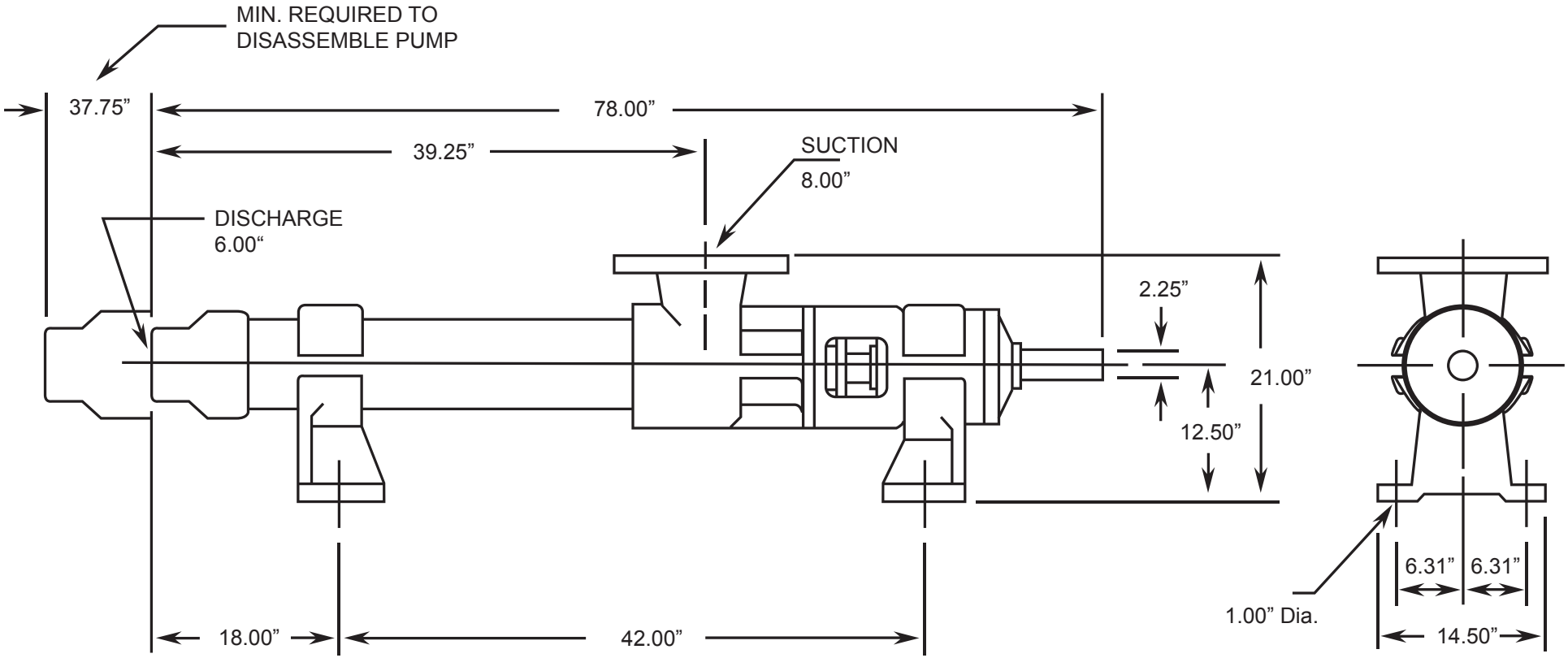

Net weight
≈ lbs.
945

ALL DIMN: Inches

BACK TO TOP

2 Stage Pump

P: 847.640.7867 F: 847.640.7855

2525 Clearbrook Drive Arlington Heights, IL 60005

www.libertyprocess.com

LIBERTY SERIES - 2LL12H

Progressive Cavity Pump

Dimensional Drawings

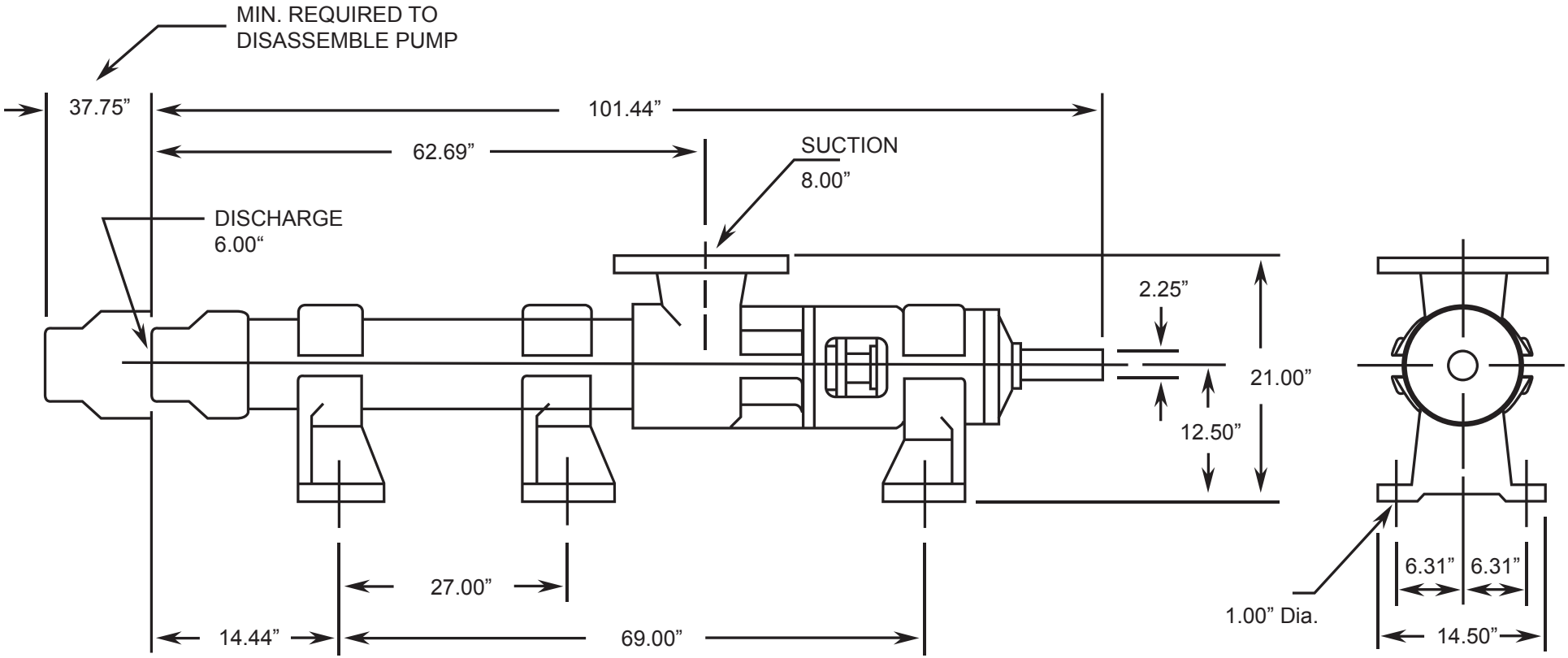

Net weight
≈ lbs.
1205

ALL DIMN: Inches

BACK TO TOP

2 Stage Pump

P: 847.640.7867 F: 847.640.7855
2525 Clearbrook Drive Arlington Heights, IL 60005
www.libertyprocess.com